

Large Size Bearings

Ball bearings
Roller bearings
Back-up rollers
Spherical plain bearings
Bearing housings
Accessories

SCHAEFFLER

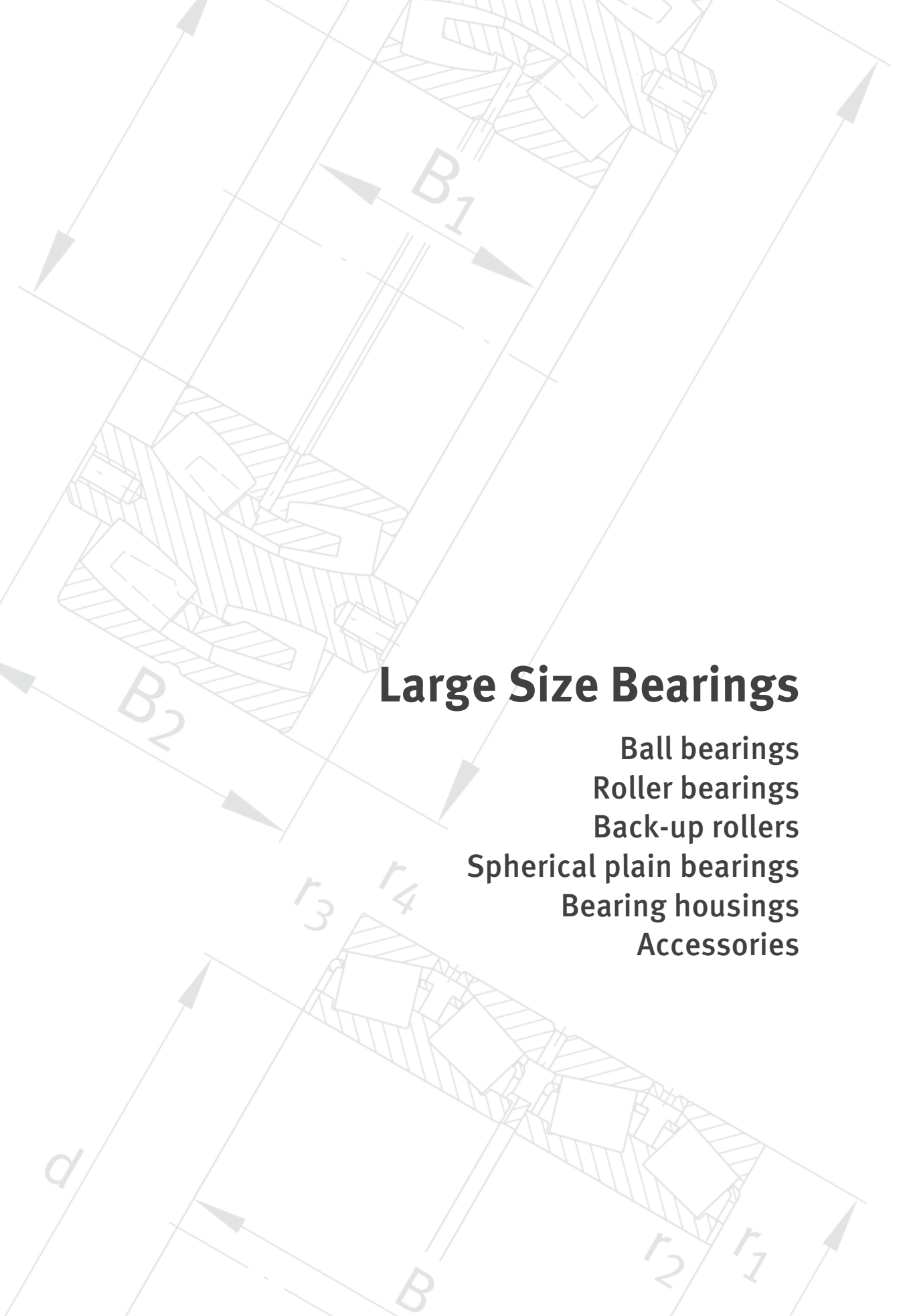

Large Size Bearings

Ball bearings
Roller bearings
Back-up rollers
Spherical plain bearings
Bearing housings
Accessories

All data have been prepared with a great deal of care and checked for their accuracy. However, no liability can be assumed for any incorrect or incomplete data. We reserve the right to make technical modifications.

© Schaeffler Technologies AG & Co. KG
Issued: 2016, June

Reproduction in whole or in part without our authorisation is prohibited.

Foreword

Schaeffler Technologies

Schaeffler Technologies with its brands INA and FAG is a leading worldwide supplier of rolling bearings, spherical plain bearings, plain bearings, linear products, accessories specific to bearings and comprehensive maintenance products and services.
It has approximately 40 000 catalogue products manufactured as standard, providing an extremely wide portfolio that gives secure coverage of applications from all 60 designated industrial market sectors.

The central factors responsible for this success are our outstanding strength in innovation, our global focus on local customer proximity, highly developed manufacturing methods, extremely high quality standards in all processes and our ability to transform specific customer requirements quickly and accurately into cost-effective solutions. Against this background of expertise, knowledge and experience together with our wide range of catalogue items, we see ourselves as a high performance, customer focussed partner.

Research and Development

As a company looking to the future, we are especially active in the field of research and development. The key areas in this respect include not only research into fundamental principles, materials technology, tribology and calculation but also extensive inspection and test methods as well as activities to optimise manufacturing technology. This is oriented towards ensuring the continuous development, improvement and application of our products in the long term.

We carry out research and development on a global basis.
Our development centres are linked with each other worldwide and are thus in a position to exchange current information on a very short timescale as well as access and communicate the most recent data. This ensures that a uniform level of knowledge and information is available worldwide.

In addition to continued development of standard products, we work closely in research and development activities with our customers where specific customer solutions are required. They can thus benefit from the best product for their application, with the maximum possible performance capacity at a cost-effective price.

Quality
Manufacturing technology
Environmental protection

“Zero defects” is our quality objective. We have matched all our processes, both in product development and in manufacturing, to this target.

Our comprehensive know-how in forming, in forging, in heat treatment and surface technologies, in hard machining by means of grinding and honing and in assembly processes is applied in order to ensure that our products fulfil the required quality level.

Our manufacturing processes are monitored by means of systematic quality inspections. This ensures that all products continuously fulfil the same high standard of quality.

All Schaeffler sites worldwide are certified to ISO/TS 16949:2009 and DIN EN ISO 9001:2008.

With the validation and certification of our manufacturing sites, we are taking a pioneering role in environmental protection.
All larger manufacturing sites are certified to ISO 14001 and are also validated in accordance with the more stringent EC ECO Management and Audit Scheme (EMAS).

Foreword

Worldwide presence

Through a closely knit network of development and manufacturing sites, sales companies and an international distribution structure, we are represented throughout the world. This global presence ensures effective linkage between the major markets in Europe, India, South East Asia/Pacific Region, East Asia, North and South America.

As a result, we have an on-site presence with service and technical advice in close proximity to the customer.

We take orders from throughout the world and make deliveries worldwide too. Furthermore, we support our customers worldwide in resolving their bearing arrangement requirements, respond to technical queries and develop specific bearing arrangement solutions in local partnership with our customers.

Large size bearing catalogue GL 1 An engineering compendium

Catalogue GL 1 is based on our proven catalogue HR 1, Rolling Bearings. It gives descriptions of standard rolling bearings with an outside diameter of 320 mm or greater and the appropriate accessories as well as numerous special rolling bearings and large plain bearings.

We are thus offering an overview of our product range for large and heavy machinery for the original equipment manufacture, distribution and aftermarket sectors. In order to facilitate the selection of suitable products, reference is made at many points to typical applications.

The catalogue shows which products can be considered for a bearing arrangement, the factors that must be taken into consideration in the design, the tolerances required on the adjacent construction and how the bearing arrangement is sealed.
It gives detailed information on the calculation of bearing rating life, on temperatures and loads, on the lubricants that are most suitable for the bearing arrangement and, last but not least, on how the products are correctly mounted and maintained.

The data represent the state of current technology and manufacture as at April 2009. They take account of the progress in rolling bearing technology as well as the experience gained in numerous applications. Any information in publications that does not concur with the data in this catalogue is therefore invalid.

Definition of the Attention symbol

This catalogue gives descriptions of standard and special bearings. Since these are used in numerous applications, we cannot make a judgement as to whether any malfunctions will cause harm to persons or property.

Follow instructions

It is always and fundamentally the responsibility of the designer and user to ensure that all specifications are observed and that all necessary information is communicated to the end user.
This applies in particular to applications in which product failure and malfunction may constitute a hazard to human beings.



In line with ANSI 535.6-2006, we have replaced the old Attention symbol by this new symbol.

In case of non-compliance, damage or malfunctions in the product or the adjacent construction may occur.

X-life Maximum customer benefit

X-life is the premium brand of Schaeffler. It brings together the strengths of the two brands and gives completely new design opportunities for design engineers.

X-life is an all-encompassing concept: advice, product development, service and sales are fully integrated with each other in all phases of the product cycle.

As a service surround system, it includes a comprehensive lubricant concept. In addition, X-life stands for continuous quality improvement and local customer focus applied worldwide.

Advantages of the X-life grade

The use of state of the art manufacturing technologies has resulted in a better, more uniform surface over the whole contact face between the rolling elements and raceway.
As a result, under identical load there is a significant reduction in the stress conditions present on the rolling elements and raceway. The improved surface quality gives reduced friction and lower bearing temperatures, running resistance is lower and less strain is placed on the lubricant.

Thanks to such improvements, the basic dynamic load ratings are significantly higher than those of the previous design.

As a result, the basic rating life is higher; i.e. the operating life of the bearings is considerably longer under the same operating conditions. Alternatively, higher loads can be applied while maintaining the same life values.

With their optimised characteristics, X-life bearings open up completely new application prospects, such as downsizing of the bearing arrangement. Furthermore, the improved price/performance ratio ultimately increases the overall cost-effectiveness of the bearing arrangement.

X-life bearings are described in the sections on product features and are indicated in the dimension tables by the symbol XL.

Product ranges for specific market sectors

Special product ranges are available for specific market sectors. In addition to standard products, these include a large number of special solutions.
The range extends from simple, application-specific bearings via complete, ready-to-fit systems to special solutions that can be used to fulfil the most complex bearing technology requirements with high functional security and cost-effectiveness.

Contact our External Sales at the earliest possible stage and benefit from the broad knowledge and considerable experience of these specialists for your project.

Foreword

medias® *professional* **Electronic information system**

medias® *professional*, the proven selection and information system, presents the INA and FAG catalogue products in electronic format. As with the printed catalogue, this gives our customers product information on both brands in a single data source. This saves time and gives easier handling.

medias® *professional* is available online in several languages, is easy to navigate and is particularly clear thank to the use of numerous pictures, diagrams and models. There are also highly representative application examples, classified by market sector.

Datasheets on the bearing series can be generated as PDF files. It includes a lubricant database and also the web2CAD link for direct download and integration of 3D models.

medias® *professional* focusses on the individual bearing. The complete shaft can be simulated and any influences on the bearings as a result of shaft deformation can be determined using the calculation program BEARINX®. This program can also be made available to direct customers as BEARINX®-Online via the Internet (for conditions, see the INA and FAG homepage).

In conclusion, ***medias®*** *professional* is a comprehensive, reliable system to help you answer many questions on rolling bearing technology by electronic means, quickly and at any location.

Other technical publications

This catalogue contains a large proportion of the core rotary rolling bearing range as well as numerous special rolling bearings of the brands INA and FAG. It also includes large INA radial and axial spherical plain bearings.

Furthermore, we develop and manufacture many other products and systems that are of significant interest in terms of technical progress and cost-effectiveness for rotary and linear bearing arrangements as well as for the automotive sector. These are covered in separate technical publications that can be obtained upon request.

INA and FAG
When it comes to motion

Catalogue GL 1 stands for pioneering bearing technology, application-focussed advice, the highest product and performance density and continuous development.

The benefits to you:

- selection of products from a vast product range
- maximum benefit, since the most suitable product is used in the right place
- worldwide product availability
- short delivery times
- long term supply capability
- security of planning for the long view
- simplified stockholding
- market-competitive prices
- global service
- comprehensive, application-focussed advice.

Together we move the world

For us, technical progress means never standing still.
In partnership with you, we are continually working on new solutions so that your vision and our technical ideas can continue to become a reality, to your benefit.

With our products and our knowledge, we can together continue to fulfil the challenges of your market in relation to bearing arrangements. To this end, this catalogue is an important instrument.

Contents

	Page
Product index	10
Technical principles	24
Deep groove ball bearings	178
Angular contact ball bearings	217
Spindle bearings	256
Four point contact bearings	268
Cylindrical roller bearings	279
Tapered roller bearings	493
Barrel roller bearings	594
Spherical roller bearings	605
Axial deep groove ball bearings	734
Axial angular contact ball bearings	747
Axial cylindrical roller bearings	774
Axial tapered roller bearings	793
Axial spherical roller bearings	822
Back-up rollers for multi-roll cold rolling mills	836
Spherical plain bearings	847
Bearing housings	902
Fasteners and retainers	992
Arcanol rolling bearing greases	1046
Other products	1053
Market sectors	1092
Addresses	1126

Product index

		Page
160	Deep groove ball bearings, single row	180
202	Barrel roller bearings, cylindrical bore	596
202..-K	Barrel roller bearings, tapered bore	596
202..-K + H	Barrel roller bearings, adapter sleeve	596
203	Barrel roller bearings, cylindrical bore	596
203..-K	Barrel roller bearings, tapered bore	596
203..-K + H	Barrel roller bearings, adapter sleeve	596
222	Spherical roller bearings, cylindrical bore	610
222..-E1	Spherical roller bearings, cylindrical bore	610
222..-E1-K	Spherical roller bearings, tapered bore	610
222..-E1-K + AH	Spherical roller bearings, tapered bore, withdrawal sleeve	611
222..-E1-K + H	Spherical roller bearings, tapered bore, adapter sleeve	611
222..-K	Spherical roller bearings, tapered bore	610
222..-K + AH	Spherical roller bearings, tapered bore, withdrawal sleeve	611
222..-K + H	Spherical roller bearings, tapered bore, adapter sleeve	611
222S	Spherical roller bearings, split, inch size bearing bore	704
222SM	Spherical roller bearings, split, metric bearing bore	704
223	Spherical roller bearings, cylindrical bore	610
223..-E1	Spherical roller bearings, cylindrical bore	610
223..-E1-K	Spherical roller bearings, tapered bore	610
223..-E1-K + AH	Spherical roller bearings, tapered bore, withdrawal sleeve	611
223..-E1-K + H	Spherical roller bearings, tapered bore, adapter sleeve	611
223..-K	Spherical roller bearings, tapered bore	610
223..-K + AH	Spherical roller bearings, tapered bore, withdrawal sleeve	611
223..-K + H	Spherical roller bearings, tapered bore, adapter sleeve	611
230	Spherical roller bearings, cylindrical bore	610
230..-K	Spherical roller bearings, tapered bore	610
230..-K + AH	Spherical roller bearings, tapered bore, withdrawal sleeve	611
230..-K + H	Spherical roller bearings, tapered bore, adapter sleeve	611
230S	Spherical roller bearings, split, inch size bearing bore	704
230SM	Spherical roller bearings, split, metric bearing bore	704

		Page
231	Spherical roller bearings, cylindrical bore	610
231..-E1A	Spherical roller bearings, cylindrical bore	610
231..-E1A-K	Spherical roller bearings, tapered bore	610
231..-E1A-K + AH	Spherical roller bearings, tapered bore, withdrawal sleeve	611
231..-E1A-K + H	Spherical roller bearings, tapered bore, adapter sleeve	611
231..-K	Spherical roller bearings, tapered bore	610
231..-K + AH	Spherical roller bearings, tapered bore, withdrawal sleeve	611
231..-K + H	Spherical roller bearings, tapered bore, adapter sleeve	611
231S	Spherical roller bearings, split, inch size bearing bore	704
231SM	Spherical roller bearings, split, metric bearing bore	704
232	Spherical roller bearings, cylindrical bore	610
232..-E1A	Spherical roller bearings, cylindrical bore	610
232..-E1A-K	Spherical roller bearings, tapered bore	610
232..-E1A-K + AH	Spherical roller bearings, tapered bore, withdrawal sleeve	611
232..-E1A-K + H	Spherical roller bearings, tapered bore, adapter sleeve	611
232..-K	Spherical roller bearings, tapered bore	610
232..-K + AH	Spherical roller bearings, tapered bore, withdrawal sleeve	611
232..-K + H	Spherical roller bearings, tapered bore, adapter sleeve	611
233..-A	Spherical roller bearings, cylindrical bore	610
2344	Axial angular contact ball bearings, double direction	762
2347	Axial angular contact ball bearings, double direction	762
238	Spherical roller bearings, cylindrical bore	610
238..-K	Spherical roller bearings, tapered bore	610
238..-K + AH	Spherical roller bearings, tapered bore, withdrawal sleeve	611
239	Spherical roller bearings, cylindrical bore	610
239..-K	Spherical roller bearings, tapered bore	610
239..-K + AH	Spherical roller bearings, tapered bore, withdrawal sleeve	611
239..-K + H	Spherical roller bearings, tapered bore, adapter sleeve	611
239SM	Spherical roller bearings, split	704
240	Spherical roller bearings, cylindrical bore	610
240..-K30	Spherical roller bearings, tapered bore	610
240..-K30 + AH	Spherical roller bearings, tapered bore, withdrawal sleeve	611
240..-K30 + H	Spherical roller bearings, tapered bore, adapter sleeve	611
240SM	Spherical roller bearings, split	704

Product index

		Page
241	Spherical roller bearings, cylindrical bore	610
241..-E1	Spherical roller bearings, cylindrical bore	610
241..-E1-K30	Spherical roller bearings, tapered bore	610
241..-E1-K30 + AH	Spherical roller bearings, tapered bore, withdrawal sleeve	611
241..-K30	Spherical roller bearings, tapered bore	610
241..-K30 + AH	Spherical roller bearings, tapered bore, withdrawal sleeve	611
241..-K30 + H	Spherical roller bearings, tapered bore, adapter sleeve	611
241SM	Spherical roller bearings, split	704
248	Spherical roller bearings, cylindrical bore	610
248..-K30	Spherical roller bearings, tapered bore	610
248..-K30 + AH	Spherical roller bearings, tapered bore, withdrawal sleeve	611
248..-K30 + H	Spherical roller bearings, tapered bore, adapter sleeve	611
249	Spherical roller bearings, cylindrical bore	610
249..-K30	Spherical roller bearings, tapered bore	610
249..-K30 + H	Spherical roller bearings, tapered bore, adapter sleeve	611
292..-E (E1)	Axial spherical roller bearings, increased capacity design	824
293..-E (E1)	Axial spherical roller bearings, increased capacity design	824
294..-E (E1)	Axial spherical roller bearings, increased capacity design	824
302	Tapered roller bearings, single row	498
302..-N11CA	Tapered roller bearings, matched in pairs	498
303	Tapered roller bearings, single row	498
303..-N11CA	Tapered roller bearings, matched in pairs	498
313	Tapered roller bearings, single row	498
313..-N11CA	Tapered roller bearings, matched in pairs	498
320..-X	Tapered roller bearings, single row	498
320..-X-N11CA	Tapered roller bearings, matched in pairs	498
322	Tapered roller bearings, single row	498
322..-N11CA	Tapered roller bearings, matched in pairs	498
323..-A	Tapered roller bearings, single row, modified internal construction	498
323..-N11CA	Tapered roller bearings, matched in pairs	498

		Page
329	Tapered roller bearings, single row	498
329..-N11CA	Tapered roller bearings, matched in pairs	498
511	Axial deep groove ball bearings, single direction	736
512	Axial deep groove ball bearings, single direction	736
513	Axial deep groove ball bearings, single direction	736
514	Axial deep groove ball bearings, single direction	736
60	Deep groove ball bearings, single row	180
608	Deep groove ball bearings, single row	180
609	Deep groove ball bearings, single row	180
618	Deep groove ball bearings, single row	180
619	Deep groove ball bearings, single row	180
62	Deep groove ball bearings, single row	180
63	Deep groove ball bearings, single row	180
70	Angular contact ball bearings, single row	222
70..-B	Angular contact ball bearings, single row	222
708	Angular contact ball bearings, single row	222
709	Angular contact ball bearings, single row	222
718	Angular contact ball bearings, single row	222
719	Angular contact ball bearings, single row	222
72..-B	Angular contact ball bearings, single row	222
73..-B	Angular contact ball bearings, single row	222
811	Axial cylindrical roller bearings, single row	776
812	Axial cylindrical roller bearings, single row	776
894	Axial cylindrical roller bearings, double row	776
AH22	Withdrawal sleeves	994
AH(X)23	Withdrawal sleeves	994
AH(X)30	Withdrawal sleeves	994
AH(X)31	Withdrawal sleeves	994
AH(X)32	Withdrawal sleeves	994
AH240	Withdrawal sleeves	994
AH241	Withdrawal sleeves	994
AH33	Withdrawal sleeves	994
AH38	Withdrawal sleeves	994
AH39	Withdrawal sleeves	994

Product index

		Page
Arcanol	Rolling bearing greases	1048
B70	Standard spindle bearings	258
B719	Standard spindle bearings	258
B72	Standard spindle bearings	258
BND	Plummer block housings, unsplit	907
BNM	Plummer block housings, unsplit	907
F-8..KL1	Deep groove ball bearings, single row, special bearings	180
F-8..KL1-N1	Deep groove ball bearings, single row, retaining slot in outer ring, special bearings	180
F-HC8..KL1	Hybrid deep groove ball bearings, single row, special bearings for spreader rolls	180
F-8..PRL-01	Spherical roller bearings, special bearings	610
F-8..PRL-02	Spherical roller bearings, sealed, special bearings	610
F-8..231	Spherical roller bearings, special bearings for light section steel lines	610
F-8..240	Spherical roller bearings, special bearings for light section steel lines	610
F-8..241..-A-K30	Spherical roller bearings, special bearings for cold pilger rolling machines	610
F-8..SKL1-01	Angular contact ball bearings, single row, contact angle 40°, special bearings	222
F-8..SKL1-02	Angular contact ball bearings, single row, contact angle 30°, special bearings	222
F-8..TA1-01	Axial tapered roller bearings, single direction, special bearings	798
F-8..TA1-02	Axial tapered roller bearings, single direction, special bearings for screw-down mechanisms	814
F-8..TR1	Tapered roller bearings, single row, special bearings	498
F-8..TR2-01	Tapered roller bearings, double row, X arrangement, axial bearings for work rolls	522
F-8..TR2-02	Tapered roller bearings, double row, X arrangement, axial bearings for oil film bearings	522
F-8..TR2-03	Tapered roller bearings, double row, X arrangement, extended inner ring, special bearings	522
F-8..TR2-04	Tapered roller bearings, double row, O arrangement, special bearings for vertical rolls in universal stands	522
F-8..TR2-05	Tapered roller bearings, double row, O arrangement, special bearings	522
F-8..TR2-06	Tapered roller bearings, double row, X arrangement, special bearings for loose fit	522

		Page
F-8..TR4-01	Tapered roller bearings, four-row, inch size dimensions, special bearings	558
F-8..TR4-02	Tapered roller bearings, four-row, metric dimensions, special bearings	558
F-8..TR4-03	Tapered roller bearings, four-row, sealed, special bearings	558
F-8..TR4-04	Tapered roller bearings, four-row, extended inner rings, special bearings	558
F-8..ZL1-01	Cylindrical roller bearings with cage, non-locating, special bearings NU	284
F-8..ZL1-02	Cylindrical roller bearings with cage, non-locating, special bearings N	284
F-8..ZL1-03	Cylindrical roller bearings with cage, semi-locating, special bearings NJ	285
F-8..ZL1-04	Cylindrical roller bearings with cage, locating, special bearings NUP	285
F-8..ZL1-05	Cylindrical roller bearings with cage, non-locating, split, special bearings N	478
F-8..ZL1-07	Cylindrical roller bearings with cage, locating, split, special bearings NUP	478
F-8..ZL2-02	Cylindrical roller bearings with cage, double row, non-locating, self-aligning, special bearings	466
F-8..ZL2-03	Cylindrical roller bearings with cage, double row, locating, split, special bearings	478
F-8..ZL4-01	Cylindrical roller bearings with cage, four-row, non-locating, special bearings for tight fit	416
F-8..ZL4-02	Cylindrical roller bearings with cage, four-row, non-locating, special bearings for loose fit	416
GE..-AW	Axial spherical plain bearings, maintenance-free	876
GE..-DO	Radial spherical plain bearings, requiring maintenance	892
GE..-DO-2RS	Radial spherical plain bearings, requiring maintenance, lip seals	892
GE..-DW	Radial spherical plain bearings, maintenance-free	876
GE..-DW-2RS2	Radial spherical plain bearings, maintenance-free, lip seals	876
GE..-FO-2RS	Radial spherical plain bearings, requiring maintenance, lip seals	892
GE..-FW-2RS	Radial spherical plain bearings, maintenance-free, lip seals	876
GE..-UK-2RS	Radial spherical plain bearings, maintenance-free, lip seals	876

Product index

		Page
H23	Adapter sleeves, with nut and retainer	994
H240	Adapter sleeves, with nut and retainer	994
H241	Adapter sleeves, with nut and retainer	994
H30	Adapter sleeves, with nut and retainer	994
H31	Adapter sleeves, with nut and retainer	994
H32	Adapter sleeves, with nut and retainer	994
H33	Adapter sleeves, with nut and retainer	994
H39	Adapter sleeves, with nut and retainer	994
HCB719	Standard spindle bearings, ceramic balls	258
HM	Locknuts	994
HM30	Locknuts	994
HM31	Locknuts	994
HMZ	Shaft nuts	994
HMZ30	Shaft nuts	994
HYDNUT	Hydraulic nuts	995
HYDNUT..-HEAVY	Hydraulic nuts, smooth bore	995
HYDNUT..-INCH	Hydraulic nuts, inch size thread	995
KM	Locknuts	994
KML	Locknuts	994
KPG	Plummer block housings, split	905
KPGZ	Plummer block housings, split	905
LOE	Plummer block housings, split, for oil lubrication	905
LOU	Plummer block housings, split, for oil lubrication	905
LSL1923	Cylindrical roller bearings with disc cage	285
MB	Tab washers	995
MBL	Tab washers	995
MS30	Retaining brackets, with screw	995
MS31	Retaining brackets, with screw	995
N10	Cylindrical roller bearings with cage, non-locating	284
N10..-K-M1-SP	Super precision cylindrical roller bearings, non-locating	284
N18	Cylindrical roller bearings with cage, non-locating	284
N19..-K-M1-SP	Super precision cylindrical roller bearings, non-locating	284
N28	Cylindrical roller bearings with cage, non-locating	284
N29	Cylindrical roller bearings with cage, non-locating	284

		Page
N2..-E	Cylindrical roller bearings with cage, non-locating	284
N3..-E	Cylindrical roller bearings with cage, non-locating	284
N4	Cylindrical roller bearings with cage, non-locating	284
NJ10	Cylindrical roller bearings with cage, semi-locating	285
NJ10 + HJ	Cylindrical roller bearings with cage, locating, L-section ring	285
NJ18	Cylindrical roller bearings with cage, semi-locating	285
NJ18 + HJ	Cylindrical roller bearings with cage, locating, L-section ring	285
NJ19	Cylindrical roller bearings with cage, semi-locating	285
NJ19 + HJ	Cylindrical roller bearings with cage, locating, L-section ring	285
NJ2..-E	Cylindrical roller bearings with cage, semi-locating	285
NJ2..-E + HJ	Cylindrical roller bearings with cage, locating, L-section ring	285
NJ22..-E	Cylindrical roller bearings with cage, semi-locating	285
NJ22..-E + HJ	Cylindrical roller bearings with cage, locating, L-section ring	285
NJ23..-E	Cylindrical roller bearings with cage, semi-locating	285
NJ23..-E + HJ	Cylindrical roller bearings with cage, locating, L-section ring	285
NJ3..-E	Cylindrical roller bearings with cage, semi-locating	285
NJ3..-E + HJ	Cylindrical roller bearings with cage, locating, L-section ring	285
NJ28	Cylindrical roller bearings with cage, semi-locating	285
NJ28 + HJ	Cylindrical roller bearings with cage, locating, L-section ring	285
NJ29	Cylindrical roller bearings with cage, semi-locating	285
NJ29 + HJ	Cylindrical roller bearings with cage, locating, L-section ring	285
NJ4	Cylindrical roller bearings with cage, semi-locating	285
NJ4 + HJ	Cylindrical roller bearings with cage, locating, L-section ring	285
NN30..-AS-K-M-SP	Super precision cylindrical roller bearings, non-locating, double row	390
NNU40	Cylindrical roller bearings with cage, non-locating, double row	390
NNU41	Cylindrical roller bearings with cage, non-locating, double row	390
NNU48	Cylindrical roller bearings with cage, non-locating, double row	390
NNU49	Cylindrical roller bearings with cage, non-locating, double row	390
NNU49..-S-K-M-SP	Super precision cylindrical roller bearings, non-locating, double row	390

Product index

		Page
NU10	Cylindrical roller bearings with cage, non-locating	284
NU10..-K	Cylindrical roller bearings with cage, non-locating, tapered bore	284
NU12	Cylindrical roller bearings with cage, non-locating	284
NU18	Cylindrical roller bearings with cage, non-locating	284
NU19	Cylindrical roller bearings with cage, non-locating	284
NU2..-E	Cylindrical roller bearings with cage, non-locating	284
NU20..-E	Cylindrical roller bearings with cage, non-locating	284
NU22..-E	Cylindrical roller bearings with cage, non-locating	284
NU23..-E	Cylindrical roller bearings with cage, non-locating	284
NU28	Cylindrical roller bearings with cage, non-locating	284
NU29	Cylindrical roller bearings with cage, non-locating	284
NU3..-E	Cylindrical roller bearings with cage, non-locating	284
NU30	Cylindrical roller bearings with cage, non-locating	284
NU30..-K	Cylindrical roller bearings with cage, non-locating, tapered bore	284
NU31	Cylindrical roller bearings with cage, non-locating	284
NU38	Cylindrical roller bearings with cage, non-locating	284
NU39..-E	Cylindrical roller bearings with cage, non-locating	284
NU4	Cylindrical roller bearings with cage, non-locating	284
NUP10	Cylindrical roller bearings with cage, locating, rib washer	285
NUP18	Cylindrical roller bearings with cage, locating, rib washer	285
NUP19	Cylindrical roller bearings with cage, locating, rib washer	285
NUP2..-E	Cylindrical roller bearings with cage, locating, rib washer	285
NUP20..-E	Cylindrical roller bearings with cage, locating, rib washer	285
NUP22..-E	Cylindrical roller bearings with cage, locating, rib washer	285
NUP23..-E	Cylindrical roller bearings with cage, locating, rib washer	285
NUP28	Cylindrical roller bearings with cage, locating, rib washer	285
NUP29	Cylindrical roller bearings with cage, locating, rib washer	285
NUP3..-E	Cylindrical roller bearings with cage, locating, rib washer	285
NUP4	Cylindrical roller bearings with cage, locating, rib washer	285
PM	Plummer block housings, split	905
QJ2..-N2	Four point contact bearings, with retaining slots	270
QJ3..-N2	Four point contact bearings, with retaining slots	270
QJ10..-N2	Four point contact bearings, with retaining slots	270
QJ19..-N2	Four point contact bearings, with retaining slots	270
RA	Plummer block housings, split	905
RLE	Plummer block housings, split	906
S30	Plummer block housings, split	906
SD31	Plummer block housings, split	906
SD5	Plummer block housings, split	906

Page

SL0148 Cylindrical roller bearings, full complement, locating, double row ... 444

SL0149 Cylindrical roller bearings, full complement, locating, double row ... 444

SL0248 Cylindrical roller bearings, full complement, non-locating, double row ... 444

SL0249 Cylindrical roller bearings, full complement, non-locating, double row ... 444

SL04..-PP Cylindrical roller bearings, full complement, with annular slots, locating, lip seals ... 444

SL0450..-PP Cylindrical roller bearings, full complement, with annular slots, locating, lip seals ... 444

SL1818 Cylindrical roller bearings, full complement, semi-locating, single row ... 444

SL1822 Cylindrical roller bearings, full complement, semi-locating, single row ... 444

SL1829 Cylindrical roller bearings, full complement, semi-locating, single row ... 444

SL1830 Cylindrical roller bearings, full complement, semi-locating, single row ... 444

SL1850 Cylindrical roller bearings, full complement, semi-locating, double row ... 444

SL1923 Cylindrical roller bearings, full complement, semi-locating, single row ... 444

SPA Plummer block housings, unsplit ... 907

Z-5..AR1 Axial cylindrical roller bearings, single direction, special bearings ... 776

Z-5..AR1-01 Axial cylindrical roller bearings, single direction, split, special bearings ... 776

Z-5..AR2 Axial cylindrical roller bearings, double direction, special bearings ... 776

Z-5..ASKL1 Axial angular contact ball bearings, single direction, special bearings ... 752

Z-5..ASKL2 Axial angular contact ball bearings, double direction, special bearings ... 762

Z-5..KL1 Deep groove ball bearings, single row, special bearings ... 180

Z-5..KL1-N1 Deep groove ball bearings, single row, retaining slot in outer ring, special bearings ... 180

Product index

		Page
Z-5..PRL-03	Spherical roller bearings, sealed, special bearings	704
Z-5..SKL1-01	Angular contact ball bearings, single row, contact angle 40°, special bearings	222
Z-5..SKL1-02	Angular contact ball bearings, single row, contact angle 30°, special bearings	222
Z-5..SKL1-03	Angular contact ball bearings, single row, contact angle 40°, extended inner ring, special bearings	222
Z-5..SKL2-01	Angular contact ball bearings, double row, split outer ring, special bearings	250
Z-5..SKL2-02	Angular contact ball bearings, double row, split inner ring, special bearings	250
Z-5..SKL2-03	Angular contact ball bearings, double row, extended inner ring, special bearings	250
Z-5..TA1-01	Axial tapered roller bearings, single direction, special bearings	798
Z-5..TA1-02	Axial tapered roller bearings, single direction, special bearings for screw-down mechanisms	814
Z-5..TA2	Axial tapered roller bearings, double direction, special bearings	806
Z-5..TR1	Tapered roller bearings, single row, special bearings	498
Z-5..TR2-01	Tapered roller bearings, double row, X arrangement, axial bearings for work rolls	522
Z-5..TR2-02	Tapered roller bearings, double row, X arrangement, axial bearings for oil film bearings	522
Z-5..TR2-03	Tapered roller bearings, double row, X arrangement, extended inner ring, special bearings	522
Z-5..TR2-04	Tapered roller bearings, double row, O arrangement, special bearings for vertical rolls in universal stands	522
Z-5..TR2-05	Tapered roller bearings, double row, O arrangement, special bearings	522
Z-5..TR2-06	Tapered roller bearings, double row, X arrangement, special bearings for loose fit	522
Z-5..TR4-01	Tapered roller bearings, four-row, inch size dimensions, special bearings	558
Z-5..TR4-02	Tapered roller bearings, four-row, metric dimensions, special bearings	558
Z-5..TR4-03	Tapered roller bearings, four-row, sealed, special bearings	558
Z-5..TR4-04	Tapered roller bearings, four-row, extended inner rings, special bearings	558

		Page
Z-5..ZL1-01	Cylindrical roller bearings with cage, non-locating, special bearings NU	284
Z-5..ZL1-02	Cylindrical roller bearings with cage, non-locating, special bearings N	284
Z-5..ZL1-03	Cylindrical roller bearings with cage, semi-locating, special bearings NJ	285
Z-5..ZL1-04	Cylindrical roller bearings with cage, locating, special bearings NUP	285
Z-5..ZL1-05	Cylindrical roller bearings with cage, non-locating, split, special bearings N	478
Z-5..ZL1-06	Cylindrical roller bearings with cage, semi-locating, split, special bearings NJ	478
Z-5..ZL1-07	Cylindrical roller bearings with cage, locating, split, special bearings NUP	478
Z-5..ZL2-01	Cylindrical roller bearings with cage, double row, non-locating, special bearings	390
Z-5..ZL2-02	Cylindrical roller bearings with cage, double row, non-locating, self-aligning, special bearings	466
Z-5..ZL2-03	Cylindrical roller bearings with cage, double row, locating, split, special bearings	478
Z-5..ZL4-01	Cylindrical roller bearings with cage, four-row, non-locating, special bearings for tight fit	416
Z-5..ZL4-02	Cylindrical roller bearings with cage, four-row, non-locating, special bearings for loose fit	416
Z-5..ZL4-03	Cylindrical roller bearings with cage, four-row, non-locating, tapered bore, special bearings	416
Z-5..04.DRGL-01	Triple ring bearings, Beloit design, special bearings	724
Z-5..04.DRGL-02	Triple ring bearings, Küsters design, special bearings	724
Z-5..04.DRGL-03	Triple ring bearings, Farrel design, special bearings	724
Z-5..231	Spherical roller bearings, cylindrical bore, special bearings for light section steel lines	610
Z-5..232	Spherical roller bearings, cylindrical bore, special bearings for light section steel lines	610
Z-5..240	Spherical roller bearings, cylindrical bore, special bearings for light section steel lines	610
Z-5..241	Spherical roller bearings, cylindrical bore, special bearings for light section steel lines	610
Z-5..249	Spherical roller bearings, cylindrical bore, special bearings for converters	610
Z-5..249..-K30 + Z-5..KH	Spherical roller bearings, cylindrical bore, sleeve, special bearings for converters	611

000155D4

000155D6

000155D8

000155DC

000155DE

000155E1

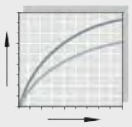

Technical principles





Deep groove ball bearings



Angular contact ball bearings



Spindle bearings



Four point contact bearings



Cylindrical roller bearings

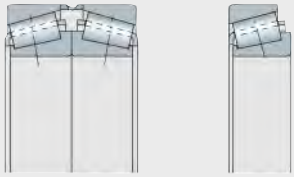

Tapered roller bearings



Barrel roller bearings



Spherical roller bearings

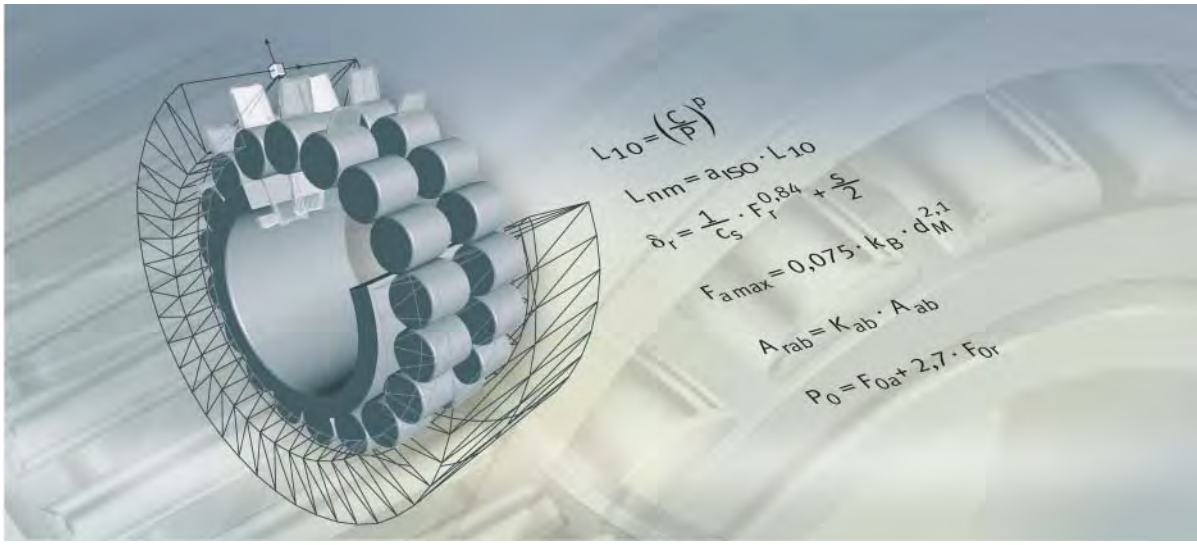

Technical principles

Load carrying capacity and life
Rigidity
Friction and increases in temperature
Speeds
Lubrication
Bearing data
Design of bearing arrangements
Mounting and dismounting

Technical principles

Page

Load carrying capacity and life

Fatigue theory as a principle ... 30
Dimensioning of rolling bearings ... 31
Dynamic load carrying capacity and life ... 31
Calculation of the rating life ... 31
- Basic rating life ... 32
- Adjusted rating life ... 33
- Expanded adjusted rating life ... 36

Equivalent operating values ... 41
- Variable load and speed ... 41

Required rating life ... 43
Operating life ... 45
Axial load carrying capacity of cylindrical roller bearings ... 46
- Bearings of TB design ... 46
- Permissible and maximum axial load ... 47

Static load carrying capacity ... 49
- Static load safety factor ... 49

Rigidity

Deflection ... 51

Friction and increases in temperature

Friction ... 53
- Heat dissipation ... 53
- Determining the friction values ... 54
- Cylindrical roller bearings under axial load ... 58

Speeds

Thermal reference speed ... 60
- Reference conditions ... 60

Limiting speed ... 61
Thermally safe operating speed ... 61
- Calculation of the thermally safe operating speed ... 62

Technical principles

Lubrication

Page

Principles 65
- Functions of the lubricant 65
- Selection of the type of lubrication 66
- Design of lubricant feed 67

Grease lubrication 68
- Composition of a grease 68
- Type of grease 69
- Consistency of greases 69
- Selection of suitable grease 70
- Greases with special suitability 74
- Grease operating life 76
- Relubrication intervals 82
- Miscibility 84
- Storage 84

Oil lubrication 85
- Operating temperatures 85
- Selection of suitable oil 85
- Compatibility 87
- Miscibility 87
- Cleanliness 87
- Lubrication methods 88
- Oil changes 95

Bearing data

Page

Radial internal clearance 96
Enveloping circle 96

Operating clearance 97
Operating clearance value 97
Calculation of operating clearance 97

Axial internal clearance 100

Bearing materials 101
High Nitrogen Steel 101
High performance steels Cronidur and Cronitect 101
Ceramic materials 101
Materials and bearing components 102

Cages 102
Sheet metal cages 102
Solid section cages 103
Cage designs 103
Guidance method 104

Operating temperature 105
Sealed bearings 105

Anti-corrosion protection 106
Corrotect® coating 106

Dimensional and geometrical tolerances 107
High precision bearings 107
Measurement methods 107
Radial bearings, excluding tapered roller bearings 109
Axial bearings 114

Chamfer dimensions 116
Radial bearings, excluding tapered roller bearings 116
Tapered roller bearings 118
Axial bearings 119

Technical principles

Design of bearing arrangements

Page

Selection of bearing arrangement ... 120
- Locating/non-locating bearing arrangement ... 120
- Adjusted bearing arrangement ... 124
- Floating bearing arrangement ... 126

Fits ... 127
- Criteria for selection of fits ... 127
- Conditions of rotation ... 128

Shaft and housing tolerances ... 129
- Tolerance zones ... 129
- Reference to tables of shaft and housing tolerances ... 129
- Tables of shaft and housing fits ... 133
- Enveloping circle ... 146

Geometrical tolerances of bearing seating surfaces ... 147
- Accuracy of bearing seating surfaces ... 147

Values for IT grades ... 150

Raceways for bearings without inner and/or outer ring ... 152
- Materials for raceways ... 152

Axial location of bearings ... 155
- Design guidelines ... 155
- Adjusted and floating bearing arrangements ... 158

Seals ... 159
- Non-contact seals in the adjacent construction ... 159
- Non-contact seals in the bearing ... 162
- Contact seals in the adjacent construction ... 162
- Contact seals in the bearing ... 165

Mounting and dismounting

Page

Handling 166
- Storage of rolling bearings 166
- Storage of Arcanol rolling bearing greases 167
- Unpacking of rolling bearings 168
- Compatibility, miscibility 168
- Cleaning of rolling bearings 168

Mounting 169
- Guidelines for mounting 169
- Mounting of rolling bearings with cylindrical seats 170
- Mounting of rolling bearings with tapered bore 172
- Guidelines for dismounting 173
- Dismounting of rolling bearings on cylindrical seats 174
- Dismounting of rolling bearings with tapered bore 175

Schaeffler introduced the “Expanded calculation of the adjusted rating life” in 1997. This method was standardised for the first time in DIN ISO 281 Appendix 1 and has been a constituent part of the international standard ISO 281 since 2007.

As part of the international standardisation work, the life adjustment factor a_{DIN} was renamed as a_{ISO} but without any change to the calculation method.

Fatigue theory as a principle

The basis of the rating life calculation in accordance with ISO 281 is Lundberg and Palmgren’s fatigue theory which always gives a final rating life.

However, modern, high quality bearings can exceed by a considerable margin the values calculated for the basic rating life under favourable operating conditions. Ioannides and Harris have developed a further model of fatigue in rolling contact that expands on the theory by Lundberg and Palmgren and gives a better description of the performance capability of modern bearings.

The method “Expanded calculation of the adjusted rating life” takes account of the following influences:

- the bearing load
- the fatigue limit of the material
- the extent to which the surfaces are separated by the lubricant
- the cleanliness in the lubrication gap
- additives in the lubricant
- the internal load distribution and frictional conditions in the bearing.

The influencing factors, particularly those relating to contamination, are very complex. A great deal of experience is required in order to arrive at an accurate assessment. Further advice should therefore be sought from the engineering service of Schaeffler Technologies.

The tables and diagrams can give only guide values.

Dimensioning of rolling bearings

The required size of a rolling bearing is dependent on the demands made on its:

- rating life
- load carrying capacity
- operational reliability.

Dynamic load carrying capacity and life

The dynamic load carrying capacity is described in terms of the basic dynamic load ratings. The basic dynamic load ratings are based on DIN ISO 281.

The basic dynamic load ratings for rolling bearings are matched to empirically proven performance standards and published in previous FAG and INA catalogues.

The fatigue behaviour of the material determines the dynamic load carrying capacity of the rolling bearing.

The dynamic load carrying capacity is described in terms of the basic dynamic load rating and the basic rating life.

The fatigue life is dependent on:

- the load
- the operating speed
- the statistical probability of the first appearance of failure.

For rotating rolling bearings, the decisive parameter is the basic dynamic load rating C.
This is:

- a constant radial load C_r for radial bearings
- a constant, concentrically acting axial load C_a for axial bearings.

The basic dynamic load rating C is that load of constant magnitude and direction which a sufficiently large number of apparently identical bearings can endure for a basic rating life of one million revolutions.

Calculation of the rating life

The methods for calculating the rating life are:

- the basic rating life L_{10} and L_{10h} to ISO 281,
  see section Basic rating life, page 32
- the adjusted rating life L_{na} to DIN ISO 281:1990
  (no longer a constituent part of ISO 281),
  see section Adjusted rating life, page 33
- the expanded adjusted rating life L_{nm} to ISO 281,
  see section Expanded adjusted rating life, page 36.

Basic rating life

The basic rating life L_{10} and L_{10h} is determined as follows:

$$L_{10} = \left(\frac{C}{P}\right)^p$$

$$L_{10\,h} = \frac{16\,666}{n} \cdot \left(\frac{C}{P}\right)^p$$

L_{10} 10^6 revolutions
The basic rating life in millions of revolutions that is reached or exceeded by 90% of a sufficiently large group of apparently identical bearings before the first evidence of material fatigue develops

L_{10h} h
The basic rating life in operating hours according to the definition for L_{10}

C N
Basic dynamic load rating

P N
Equivalent dynamic bearing load for radial and axial bearings

p –
Life exponent;
for roller bearings: p = 10/3
for ball bearings: p = 3

n min^{-1}
Operating speed.

Equivalent dynamic bearing load

The equivalent dynamic load P is a calculated value.
This value is constant in magnitude and direction; it is a radial load for radial bearings and an axial load for axial bearings.

P gives the same rating life as the combined load occurring in practice.

$$P = X \cdot F_r + Y \cdot F_a$$

P N
Equivalent dynamic bearing load

F_r N
Radial dynamic bearing load

F_a N
Axial dynamic bearing load

X –
Radial factor given in the dimension tables or product description

Y –
Axial factor given in the dimension tables or product description.



This calculation method cannot be applied to axial cylindrical roller bearings. Combined loads are not permissible with these bearings.

Adjusted rating life

The adjusted rating life L_{na} can be calculated if, in addition to the load and speed, other influences are known such as:

- special material characteristics
- lubrication
- a requisite reliability other than 90%.

This calculation method was replaced in ISO 281:2007 by calculation of the expanded adjusted rating life L_{nm}, see page 36.

$$L_{na} = a_1 \cdot a_2 \cdot a_3 \cdot L_{10}$$

L_{na} 10^6 revolutions
Adjusted rating life for special material characteristics and operating conditions with a requisite reliability of (100 – n) %

L_{10} 10^6 revolutions
Basic rating life

a_1 –
Life adjustment factor for a requisite reliability other than 90%.
In ISO 281:2007, the values for the life adjustment factor a_1 were redefined, see table Life adjustment factor a_1 for requisite reliability, page 36

a_2 –
Life adjustment factor for special material characteristics.
For standard rolling bearing steels: $a_2 = 1$

a_3 –
Life adjustment factor for special operating conditions;
in particular lubrication, *Figure 1*.

The viscosity ratio κ is determined according to the equation on page 34.

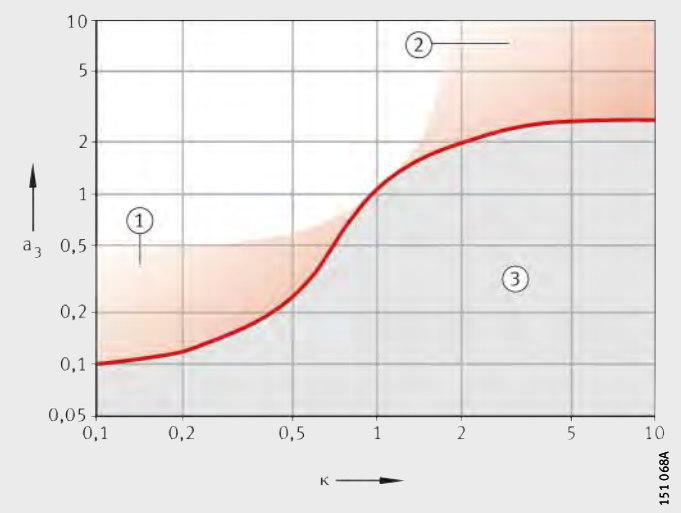

a_3 = life adjustment factor
κ = viscosity ratio
① Good cleanliness and suitable additives
② Very high cleanliness and low load
③ Contamination in the lubricant

Figure 1
Life adjustment factor a_3

Viscosity ratio

The viscosity ratio κ is an indication of the quality of lubricant film formation:

$$\kappa = \frac{\nu}{\nu_1}$$

ν mm^2s^{-1}
Kinematic viscosity of the lubricant at operating temperature

ν_1 mm^2s^{-1}
Reference viscosity of the lubricant at operating temperature.

The reference viscosity ν_1 is determined from the mean bearing diameter $d_M = (D + d)/2$ and the operating speed n, *Figure 2*, page 35.

The nominal viscosity of the oil at +40 °C is determined from the required operating viscosity ν and the operating temperature ϑ, *Figure 3*, page 35. In the case of greases, ν is the operating viscosity of the base oil.

In the case of heavily loaded bearings with a high proportion of sliding contact, the temperature in the contact area of the rolling elements may be up to 20 K higher than the temperature measured on the stationary ring (without the influence of any external heat sources).

Taking account of EP additives in calculation of the expanded adjusted rating life L_{nm}: see page 36.

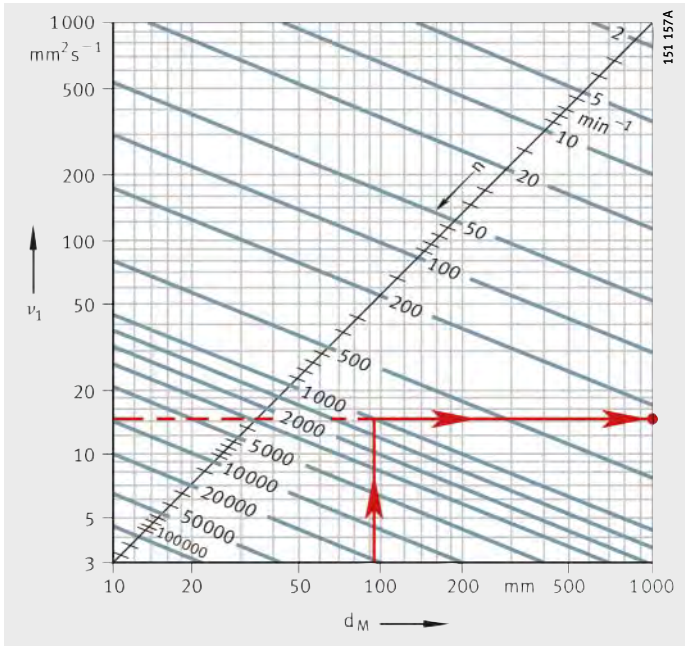

ν_1 = reference viscosity
d_M = mean bearing diameter
n = speed

Figure 2
Reference viscosity ν_1

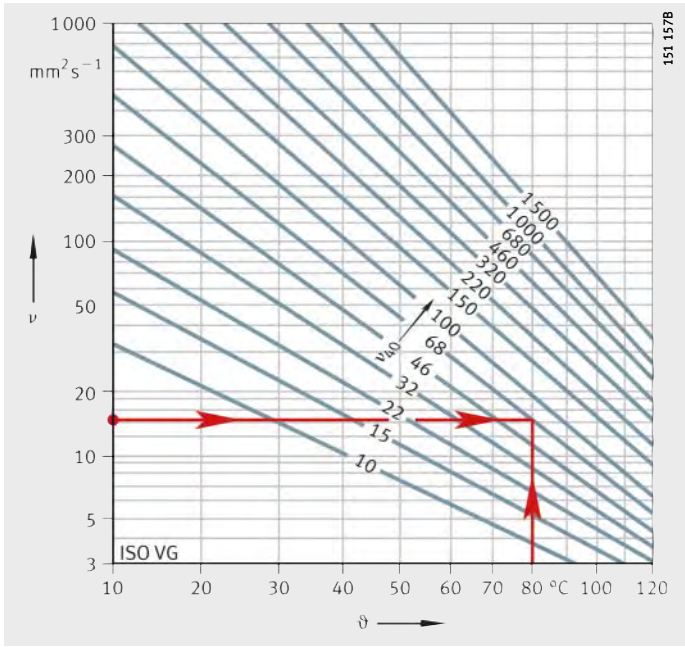

ν = operating viscosity
ϑ = operating temperature
ν_{40} = viscosity at +40 °C

Figure 3
V/T diagram for mineral oils

Expanded adjusted rating life

The calculation of the expanded adjusted rating life L_{nm} was standardised in DIN ISO 281 Appendix 1. Since 2007, it has been standardised in the worldwide standard ISO 281. Computer-aided calculation in accordance with DIN ISO 281 Appendix 4 has been specified in ISO/TS 16 281 since 2008.

L_{nm} is calculated as follows:

$$L_{nm} = a_1 \cdot a_{ISO} \cdot L_{10}$$

L_{nm} 10^6 revolutions
Expanded adjusted rating life in 10^6 revolutions to ISO 281

a_1 –
Life adjustment factor for a requisite reliability other than 90%, see table

a_{ISO} –
Life adjustment factor for operating conditions

L_{10} 10^6 revolutions
Basic rating life, see page 32.

The values for the life adjustment factor a_1 were redefined in ISO 281:2007 and differ from the previous data.

Life adjustment factor a_1 for requisite reliability

Requisite reliability %	Expanded adjusted rating life L_{nm}	Life adjustment factor a_1
90	L_{10m}	1
95	L_{5m}	0,64
96	L_{4m}	0,55
97	L_{3m}	0,47
98	L_{2m}	0,37
99	L_{1m}	0,25
99,2	$L_{0,8m}$	0,22
99,4	$L_{0,6m}$	0,19
99,6	$L_{0,4m}$	0,16
99,8	$L_{0,2m}$	0,12
99,9	$L_{0,1m}$	0,093
99,92	$L_{0,08m}$	0,087
99,94	$L_{0,06m}$	0,08
99,95	$L_{0,05m}$	0,077

Life adjustment factor a_{ISO} for operating conditions

The standardised method for calculating the life adjustment factor a_{ISO} essentially takes account of:

- the load on the bearing
- the lubrication conditions (viscosity and type of lubricant, speed, bearing size, additives)
- the fatigue limit of the material
- the type of bearing
- the residual stress in the material
- the environmental conditions
- contamination in the lubricant.

$$a_{ISO} = f\left[\frac{e_C \cdot C_u}{P}, \kappa\right]$$

a_{ISO} –
Life adjustment factor for operating conditions, *Figure 4*, page 38 to *Figure 7*, page 39

e_C –
Life adjustment factor for contamination, see table, page 40

C_u N
Fatigue limit load

P N
Equivalent dynamic bearing load

κ –
Viscosity ratio, see page 34.
For $\kappa > 4$ a value $\kappa = 4$ should be expected.
This calculation method cannot be used for $\kappa < 0{,}1$.

Taking account of EP additives in the lubricant

In accordance with ISO 281, EP additives in the lubricant can be taken into consideration as follows:

- At a viscosity ratio $\kappa < 1$ and a contamination factor $e_C \leqq 0{,}2$, a value $\kappa = 1$ can be used in calculation in the case of lubricants with EP additives that have proven effective.
  Under severe contamination (contamination factor $e_C < 0{,}2$), the effectiveness of the additives under these contamination conditions must be proven. The effectiveness of the EP additives can be demonstrated in the actual application or on a rolling bearing test rig FE 8 to DIN 51 819-1.

  Where a value $\kappa = 1$ is used in calculation in the case of EP additives that have proven effective, the life adjustment factor must be restricted to $a_{ISO} \leqq 3$. If the value a_{ISO} calculated for the actual κ is greater than 3, this value can be used in calculation.

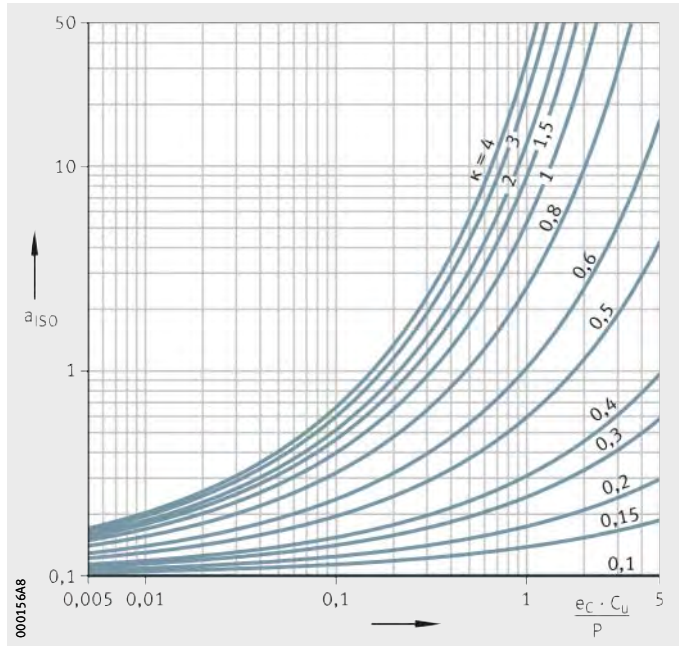

Figure 4
Life adjustment factor a_{ISO} for radial roller bearings

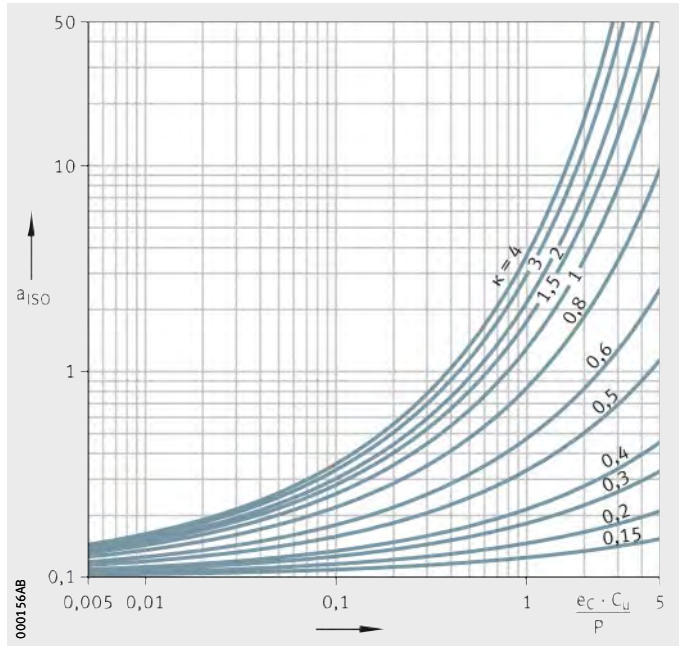

Figure 5
Life adjustment factor a_{ISO} for axial roller bearings

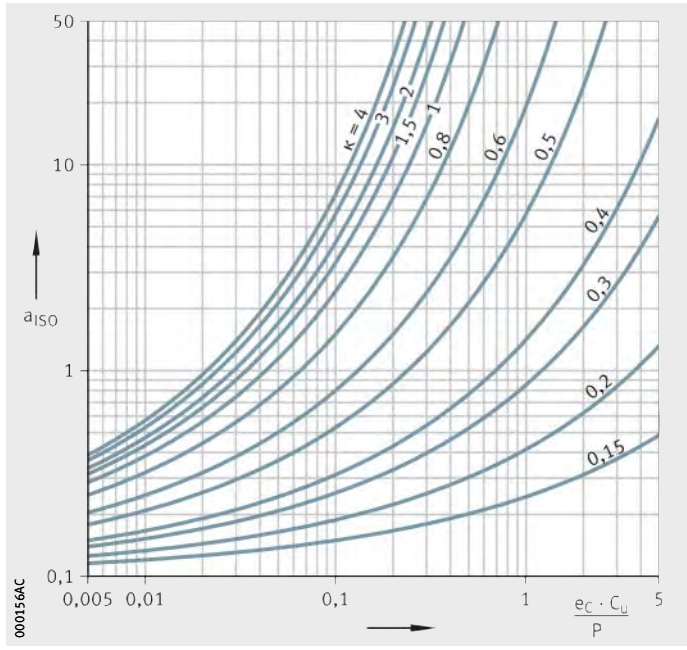

Figure 6
Life adjustment factor a_{ISO}
for radial ball bearings

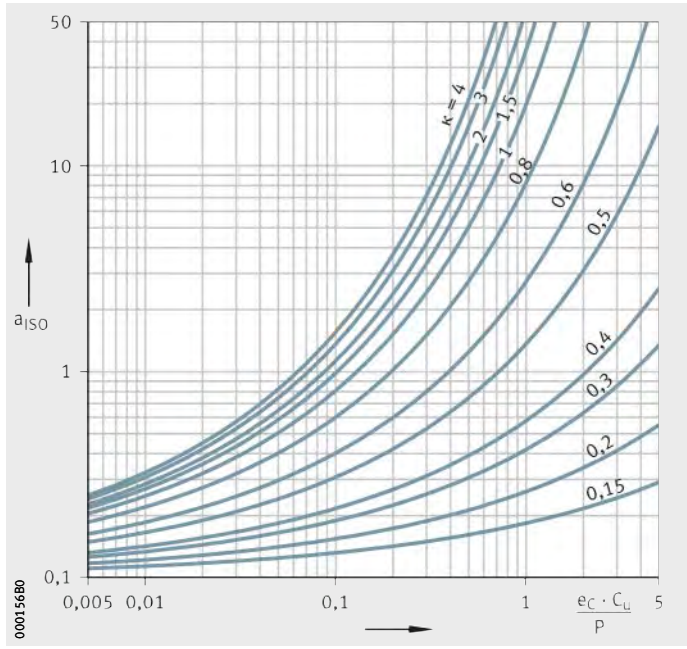

Figure 7
Life adjustment factor a_{ISO}
for axial ball bearings

Fatigue limit load

The fatigue limit load C_u in accordance with ISO 281 is defined as the load below which, under laboratory conditions, no fatigue occurs in the material.

Life adjustment factor for contamination

The life adjustment factor for contamination e_C takes account of the influence of contamination in the lubrication gap on the rating life, see table.

The rating life is reduced by solid particles in the lubrication gap and is dependent on:

- the type, size, hardness and quantity of particles
- the relative lubricant film thickness
- the bearing size.

Due to the complex nature of the interaction between these influencing factors, only an approximate guide value can be attained. The values in the tables are valid for contamination by solid particles (factor e_C). They do not take account of other contamination such as that caused by water or other fluids.



Under severe contamination ($e_C \rightarrow 0$), the bearings may fail due to wear. In this case, the operating life is substantially less than the calculated life.

Factor e_C for contamination

Contamination	Factor e_C	
	$d_M < 100$ mm[1]	$d_M \geqq 100$ mm[1]
Extreme cleanliness - particle size of the order of magnitude of the lubricant film thickness - laboratory conditions	1	1
High cleanliness - oil filtered through extremely fine filter - sealed, greased bearings	0,8 to 0,6	0,9 to 0,8
Standard cleanliness - oil filtered through fine filter	0,6 to 0,5	0,8 to 0,6
Slight contamination - slight contamination of oil	0,5 to 0,3	0,6 to 0,4
Typical contamination - bearing contaminated with wear debris from other machine elements	0,3 to 0,1	0,4 to 0,2
Heavy contamination - bearing environment heavily contaminated - bearing arrangement insufficiently sealed	0,1 to 0	0,1 to 0
Very heavy contamination	0	0

[1] d_M = mean bearing diameter $(d + D)/2$.

Equivalent operating values

The rating life equations are based on the assumption that the bearing load P and bearing speed n are constant. If the load and speed are not constant, equivalent operating values can be determined that induce the same fatigue as the actual conditions.

The operating values calculated here already take account of the life adjustment factors a_3 or a_{ISO}. They must not be applied again when calculating the adjusted rating life.

Variable load and speed

If the load and speed vary over a time period T, the speed n and equivalent bearing load P are calculated as follows:

$$n = \frac{1}{T}\int_0^T n(t)\cdot dt$$

$$P = \sqrt[p]{\frac{\int_0^T \frac{1}{a(t)}\cdot n(t)\cdot F^p(t)\cdot dt}{\int_0^T n(t)\cdot dt}}$$

Variation in steps

If the load and speed vary in steps over a time period T, n and P are calculated as follows:

$$n = \frac{q_1\cdot n_1 + q_2\cdot n_2 + \ldots + q_z\cdot n_z}{100}$$

$$P = \sqrt[p]{\frac{\frac{1}{a_i}\cdot q_i\cdot n_i\cdot F_i^p + \ldots + \frac{1}{a_z}\cdot q_z\cdot n_z\cdot F_z^p}{q_i\cdot n_i + \ldots + q_z\cdot n_z}}$$

Variable load at constant speed

If the function F describes the variation in the load over a time period T and the speed is constant, P is calculated as follows:

$$P = \sqrt[p]{\frac{1}{T}\int_0^T \frac{1}{a(t)}\cdot F^p(t)\cdot dt}$$

Load varying in steps and constant speed

If the load varies in steps over a time period T and the speed is constant, P is calculated as follows:

$$P = \sqrt[p]{\frac{\frac{1}{a_i}\cdot q_i\cdot F_i^p + \ldots + \frac{1}{a_z}\cdot q_z\cdot F_z^p}{100}}$$

Constant load at variable speed

If the speed varies but the load remains constant, the following applies:

$$n = \frac{1}{T}\int_0^T \frac{1}{a(t)}\cdot n(t)\cdot dt$$

Constant load with speed varying in steps

If the speed varies in steps, the following applies:

$$n = \frac{\frac{1}{a_i} \cdot q_i \cdot n_i + \ldots + \frac{1}{a_z} \cdot q_z \cdot n_z}{100}$$

Oscillating bearing motion

The equivalent speed is calculated as follows:

$$n = n_{osc} \cdot \frac{\varphi}{180°}$$

The equation is valid only if the angle of oscillation is greater than twice the angular pitch of the rolling elements.
If the angle of oscillation is smaller, there is a risk of false brinelling.

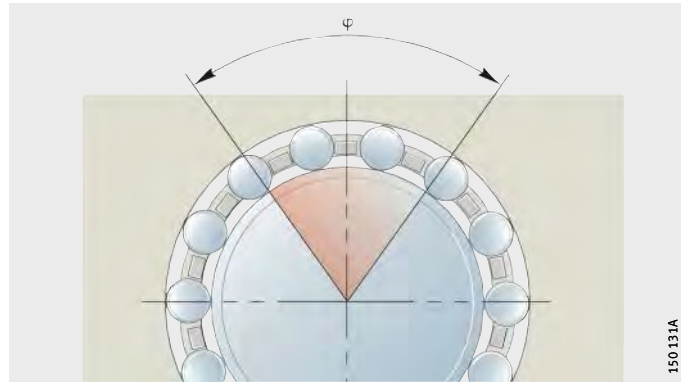

φ = angle of oscillation

Figure 8
Angle of oscillation

Symbols, units and definitions

n	min^{-1}	Mean speed
T	min	Time period under consideration
P	N	Equivalent bearing load
p	–	Life exponent; for roller bearings: p = 10/3 for ball bearings: p = 3
a_i, a(t)	–	Life adjustment factor a_{ISO} for current operating condition, see page 37
n_i, n(t)	min^{-1}	Bearing speed during current operating condition
q_i	%	Duration of operating condition as a proportion of the total operating period; $q_i = (\Delta t_i / T) \cdot 100$
F_i, F(t)	N	Bearing load during current operating condition
n_{osc}	min^{-1}	Frequency of to and fro movement
φ	°	Angle of oscillation, *Figure 8*.

Required rating life

If no information is available on the rating life, the guide values from the following tables may be used.



Do not overspecify the bearing. If the calculated rating life is $> 60\,000$ h, this normally means that the bearing arrangement is overspecified. Pay attention to the minimum load for the bearings; see the Design and safety guidelines in the product sections.

Rail vehicles

Mounting location	Recommended rating life in h			
	Ball bearings		Roller bearings	
	from	to	from	to
Gearboxes for rail vehicles	14 000	46 000	20 000	75 000

Shipbuilding

Mounting location	Recommended rating life in h			
	Ball bearings		Roller bearings	
	from	to	from	to
Marine thrust blocks	–	–	20 000	50 000
Marine shaft bearings	–	–	50 000	200 000
Large marine gearboxes	14 000	46 000	20 000	75 000

Electric motors

Mounting location	Recommended rating life in h			
	Ball bearings		Roller bearings	
	from	to	from	to
Large motors	32 000	63 000	50 000	110 000

Rolling mills, steelworks equipment

Mounting location	Recommended rating life in h			
	Ball bearings		Roller bearings	
	from	to	from	to
Roll stands	500	14 000	500	20 000
Rolling mill gearboxes	14 000	32 000	20 000	50 000
Roller tables	7 800	21 000	10 000	35 000
Centrifugal casting machines	21 000	46 000	35 000	75 000

Machine tools

Mounting location	Recommended rating life in h			
	Ball bearings		Roller bearings	
	from	to	from	to
Headstock spindles, milling spindles	14 000	46 000	20 000	75 000
Drilling spindles	14 000	32 000	20 000	50 000
Grinding spindles	7 800	21 000	10 000	35 000
Workpiece spindles in grinding machines	21 000	63 000	35 000	110 000
Machine tool gearboxes	14 000	32 000	20 000	50 000
Presses, flywheels	21 000	32 000	35 000	50 000
Presses, eccentric shafts	14 000	21 000	20 000	35 000

Gearboxes in general machine building

Mounting location	Recommended rating life in h			
	Ball bearings		Roller bearings	
	from	to	from	to
Large gearboxes, stationary	14 000	46 000	20 000	75 000

Conveying equipment

Mounting location	Recommended rating life in h			
	Ball bearings		Roller bearings	
	from	to	from	to
Belt drives, mining	–	–	75 000	150 000
Conveyor belt rollers, mining	46 000	63 000	75 000	110 000
Belt drums	–	–	50 000	75 000
Bucket wheel excavators, travel drive	7 800	21 000	10 000	35 000
Bucket wheel excavators, bucket wheel	–	–	75 000	200 000
Bucket wheel excavators, bucket wheel drive	46 000	83 000	75 000	150 000
Winding cable sheaves	32 000	46 000	50 000	75 000
Sheaves	7 800	21 000	10 000	35 000

Pumps, fans, compressors

Mounting location	Recommended rating life in h			
	Ball bearings		Roller bearings	
	from	to	from	to
Ventilators, fans	21 000	46 000	35 000	75 000
Large fans	32 000	63 000	50 000	110 000

Centrifuges, stirrers

Mounting location	Recommended rating life in h			
	Ball bearings		Roller bearings	
	from	to	from	to
Centrifuges	7 800	14 000	10 000	20 000
Large stirrers	21 000	32 000	35 000	50 000

Plastics processing

Mounting location	Recommended rating life in h			
	Ball bearings		Roller bearings	
	from	to	from	to
Plastics worm extruders	14 000	21 000	20 000	35 000
Rubber and plastics calenders	21 000	46 000	35 000	75 000

Crushers, mills, screens

Mounting location	Recommended rating life in h			
	Ball bearings		Roller bearings	
	from	to	from	to
Jaw crushers	–	–	20 000	35 000
Gyratory crushers, roll crushers	–	–	20 000	35 000
Rigid hammer mills, hammer mills, impact crushers	–	–	50 000	110 000
Tube mills	–	–	50 000	100 000
Vibration grinding mills	–	–	5 000	20 000
Grinding track mills	–	–	50 000	110 000
Vibrating screens	–	–	10 000	20 000
Briquette presses	–	–	35 000	50 000
Rotary furnace track rollers	–	–	50 000	110 000

Paper and printing machinery

Mounting location	Recommended rating life in h			
	Ball bearings		Roller bearings	
	from	to	from	to
Paper machinery, material processing	–	–	80 000	120 000
Paper machinery, wet section	–	–	100 000	150 000
Paper machinery, dry section	–	–	120 000	250 000
Paper machinery, calenders	–	–	80 000	120 000
Printing machinery	32 000	46 000	50 000	75 000

Operating life

The operating life is defined as the life actually achieved by the bearing. It may differ significantly from the calculated value.

This may be due to wear or fatigue as a result of:

- deviations in the operating data
- misalignment between the shaft and housing
- insufficient or excessive operating clearance
- contamination
- insufficient lubrication
- excessive operating temperature
- oscillating bearing movement with very small angles of oscillation (false brinelling)
- high vibration loads and false brinelling
- very high shock loads (static overloading)
- prior damage during installation.

Due to the wide variety of possible installation and operating conditions, it is not possible to precisely predetermine the operating life. The most reliable way of arriving at a close estimate is by comparison with similar applications.

Axial load carrying capacity of cylindrical roller bearings

Radial cylindrical roller bearings used as semi-locating and locating bearings can support axial forces in one or both directions in addition to radial forces.

The axial load carrying capacity is dependent on:

- the size of the sliding surfaces between the ribs and the end faces of the rolling elements
- the sliding velocity at the ribs
- the lubrication on the contact surfaces
- the tilting of the bearing.

Ribs subjected to load must be supported across their entire height.

The permissible axial load $F_{a\ per}$ must not be exceeded, in order to avoid impermissibly high temperatures.

The limiting load $F_{a\ max}$ must not be exceeded, in order to avoid unacceptable pressure at the contact surfaces.

The ratio F_a/F_r must not exceed the value 0,4.
For bearings of the TB design, the value 0,6 is permissible.

Continuous axial loading without simultaneous radial loading is not permissible.

Bearings of TB design

In the case of these bearings, the axial load carrying capacity has been significantly improved through the use of new calculation and manufacturing methods.

A special curvature on the end faces of the rollers ensures optimum contact conditions between the roller and rib.
As a result, the axial contact pressures on the rib are significantly minimised and a lubricant film capable of supporting higher loads is formed. Under normal operating conditions, wear and fatigue at the rib contact running and roller end faces is completely eliminated.
The axial frictional torque is reduced by up to 50%.
The bearing temperature during operation is therefore significantly lower.

Permissible and maximum axial load

$F_{a\,per}$ and $F_{a\,max}$ are calculated using the following equations.

Bearings of standard design

$$F_{a\,per} = k_S \cdot k_B \cdot d_M^{\,1,5} \cdot n^{-0,6} \leqq F_{a\,max}$$

Bearings of TB design

$$F_{a\,per} = 1,5 \cdot k_S \cdot k_B \cdot d_M^{\,1,5} \cdot n^{-0,6} \leqq F_{a\,max}$$

Bearings of standard and TB design

$$F_{a\,max} = 0,075 \cdot k_B \cdot d_M^{\,2,1}$$

$F_{a\,per}$ N
Permissible axial load

$F_{a\,max}$ N
Axial limiting load

k_S –
Factor dependent on the lubrication method,
see table Factor k_S for the lubrication method, page 48

k_B –
Factor dependent on the bearing series,
see table Bearing factor k_B, page 48

d_M mm
Mean bearing diameter (d + D)/2

n min^{-1}
Operating speed.

Misalignment of bearings

Misalignment caused by shaft deflection, for example, may lead to alternating stresses on the inner ring ribs. In this case, axial loading through to bearing tilting of max. 2 angular minutes must be restricted to F_{as} in accordance with the equation.

$$F_{as} = 20 \cdot d_M^{1,42}$$

If more severe tilting is present, a separate strength analysis is required.

Factor k_S for the lubrication method

Lubrication method[1]	Factor k_S
Minimal heat dissipation, drip feed oil lubrication, oil mist lubrication, low operating viscosity ($\nu < 0{,}5 \cdot \nu_1$)	7,5 to 10
Little heat dissipation, oil sump lubrication, oil spray lubrication, low oil flow	10 to 15
Good heat dissipation, recirculating oil lubrication (pressure oil lubrication)	12 to 18
Very good heat dissipation, recirculating oil lubrication with oil cooling, high operating viscosity ($\nu > 2 \cdot \nu_1$)	16 to 24

[1] The precondition for these k_S values is a reference viscosity ν_1 in accordance with the section Oil lubrication, page 85. Doped oils should be used such as CLP (DIN 51 517) and HLP (DIN 51 524) of ISO VG classes 32 to 460 and ATF oils (DIN 51 502) and gearbox oils (DIN 51 512) of SAE viscosity classes 75 W to 140 W.

Bearing factor k_B

Series	Factor k_B
SL1818, SL0148	4,5
SL1829, SL0149	11
SL1830, SL1850	17
SL1822	20
LSL1923, ZSL1923	28
SL1923	30
NJ2..-E, NJ22..-E, NUP2..-E, NUP22..-E	15
NJ3..-E, NJ23..-E, NUP3..-E, NUP23..-E	20
NJ4	22

Static load carrying capacity

Very high static loads or shock loads can cause plastic deformation on the raceways and rolling elements. This deformation limits the static load carrying capacity of the rolling bearing with respect to the permissible noise level during operation of the bearing.

If a rolling bearing operates with only infrequent rotary motion or completely without rotary motion, its size is determined in accordance with the basic static load rating C_0.

According to DIN ISO 76, this is:

- a constant radial load C_{0r} for radial bearings
- a concentrically acting, constant axial load C_{0a} for axial bearings.

The basic static load rating C_0 is that load under which the Hertzian pressure at the most heavily loaded point between the rolling elements and raceways reaches the following values:

- for roller bearings, 4 000 N/mm^2
- for ball bearings, 4 200 N/mm^2
- for self-aligning ball bearings, 4 600 N/mm^2.

Under normal contact conditions, this load causes a permanent deformation at the contact points of approx. 1/10 000 of the rolling element diameter.

Static load safety factor

In addition to dimensioning on the basis of the fatigue limit life, it is advisable to check the static load safety factor. The guide values and shock loads occurring in operation according to the table must be taken into consideration, see table Guide values for static load safety factor, page 50.

The static load safety factor S_0 is the ratio between the basic static load rating C_0 and the equivalent static load P_0:

$$S_0 = \frac{C_0}{P_0}$$

S_0 –
Static load safety factor

C_0 (C_{0r}, C_{0a}) N
Basic static load rating

P_0 (P_{0r}, P_{0a}) N
Equivalent static load on the radial or axial bearing, see page 50.

Guide values for axial spherical roller bearings and high precision bearings: see corresponding product description.

Guide values for static load safety factor

Operating conditions	Static load safety factor S_0	
	Roller bearings	Ball bearings
Smooth, low-vibration, normal operation with minimal demands for smooth running; bearings with slight rotary motion	≧ 1	≧ 0,5
Normal operation with higher requirements for smooth running	≧ 2	≧ 1
Operation with pronounced shock loads	≧ 3	≧ 2
Bearing arrangement with high requirements for running accuracy and smooth running	≧ 4	≧ 3

Equivalent static load

The equivalent static load P_0 is a calculated value. It corresponds to a radial load in radial bearings and a concentric axial load in axial bearings.

P_0 induces the same load at the centre point of the most heavily loaded contact point between the rolling element and raceway as the combined load occurring in practice.

$$P_0 = X_0 \cdot F_{0r} + Y_0 \cdot F_{0a}$$

P_0 N
Equivalent static bearing load

F_{0r} N
Radial static bearing load

F_{0a} N
Axial static bearing load

X_0 –
Radial factor given in the dimension tables or product description

Y_0 –
Axial factor given in the dimension tables or product description.

This calculation method cannot be applied to axial cylindrical roller bearings. Combined loads are not permissible with these bearings.

For all radial cylindrical roller bearings, $P_0 = F_{0r}$.

Rigidity

The rigidity is determined by the type, size and operating clearance of the bearing. It increases with the number of rolling elements supporting the load. Rolling bearings with line contact have a higher rigidity than rolling bearings with point contact, *Figure 1*.

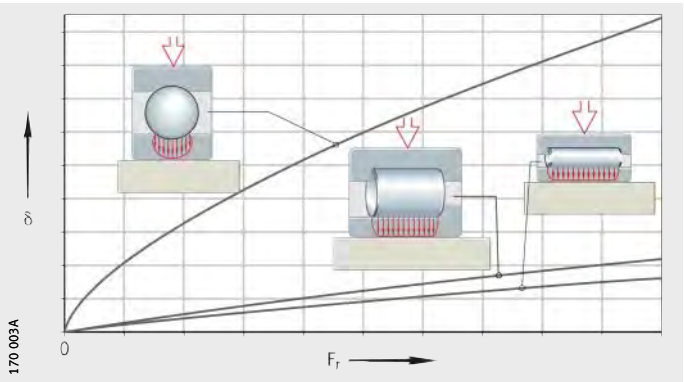

δ = displacement
F_r = radial bearing load

Figure 1
Rigidity,
dependent on the bearing type

Deflection

Rolling bearings have a progressive deflection rate.
The displacement values can be determined using approximation equations.

The equations are valid for bearings without misalignment and with a rigid surrounding structure. In axial bearings, a concentrically acting load is assumed.

$$\delta_r = \frac{1}{c_S} \cdot F_r^{0,84} + \frac{s}{2}$$

$$\delta_a = \frac{1}{c_S} \cdot \left[\left(F_{av} + F_a \right)^{0,84} - F_{av}^{\ 0,84} \right]$$

$$c_S = K_c \cdot d^{0,65}$$

c_S $N^{0,84}/\mu m$
Rigidity parameter

d mm
Bearing bore diameter

δ_r µm
Radial displacement between shaft axis and bore centre, *Figure 2*, page 52

δ_a µm
Axial displacement between shaft locating washer and housing locating washer, *Figure 3*, page 52

s µm
Radial operating clearance of mounted, unloaded bearing

F_r N
Radial bearing load

F_a N
Axial bearing load

F_{av} N
Axial preload force

K_c –
Factor for determining the rigidity parameter, see table, page 52.

Factor K_c

Bearing series	Factor K_c [1)]	Bearing series	Factor K_c [1)]
SL1818	12,8	NJ2..-E	11,1
SL1829, SL1830, SL1923	16	NJ3..-E	11,3
SL1850, SL0148, SL0248, SL0249	29,2	NJ22..-E	15,4
K811, 811, K812, 812	36,7	NJ23..-E	16,9
K893, 893, K894, 894	59,7	NU10	9,5
		NU19	11,3
		NN30..-AS-K	18,6

1) K_c values for other series available by agreement.

Radial cylindrical roller bearing

δ_r = radial displacement
F_r = radial bearing load

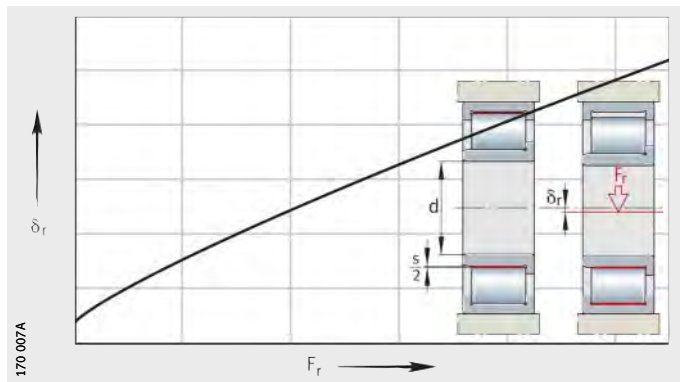

Figure 2
Radial displacement

Axial cylindrical roller bearing

δ_a = axial displacement
F_a = axial bearing load
F_{av} = axial preload force

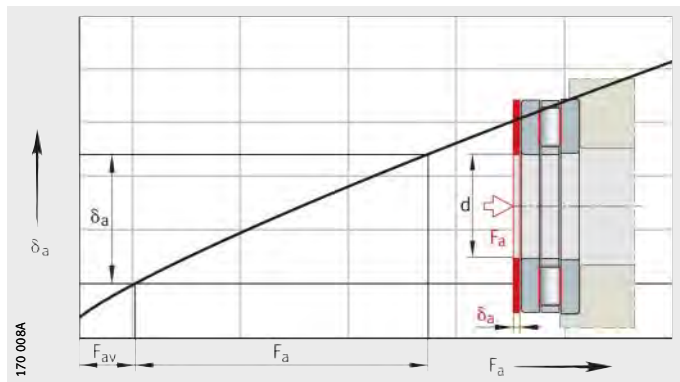

Figure 3
Axial displacement

Friction

The friction in a rolling bearing is made up of several components, see table. Due to the large number of influencing factors, such as dynamics in speed and load, tilting and skewing resulting from installation, the actual frictional torques and frictional energy may deviate significantly from the calculated values.
If the frictional torque is an important design criterion, please consult the Schaeffler Engineering Service.

Frictional component and influencing factor

Frictional component	Influencing factor
Rolling friction	Magnitude of load
Sliding friction of rolling elements Sliding friction of cage	Magnitude and direction of load Speed and lubrication conditions, running-in condition
Fluid friction (flow resistance)	Type and speed Type, quantity and operating viscosity of lubricant
Seal friction	Type and preload of seal

The idling friction is dependent on the lubricant quantity, speed, operating viscosity of the lubricant, seals and the running-in condition of the bearing.

Heat dissipation

Friction is converted into heat. This must be dissipated from the bearing. The equilibrium between the frictional energy and heat dissipation allows calculation of the thermally safe operating speed n_ϑ, see section Thermally safe operating speed, page 61.

Heat dissipation by the lubricant

Lubricating oil dissipates a portion of the heat.
Recirculating oil lubrication with additional cooling is particularly effective. Grease does not give dissipation of heat.

Heat dissipation via the shaft and housing

Heat dissipation via the shaft and housing is dependent on the temperature difference between the bearing and the surrounding structure, *Figure 1*.

Any additional adjacent sources of heat or thermal radiation must be taken into consideration.

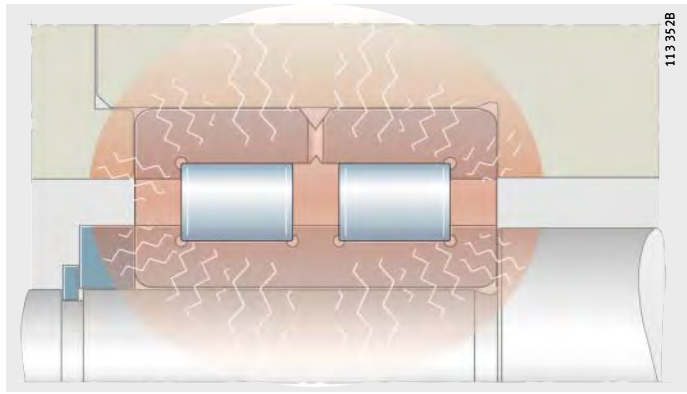

Figure 1
Temperature distribution between bearing, shaft and housing

Determining the friction values

The speed and load must also be known.
The type of lubrication, lubrication method and viscosity of lubricant at operating temperature are further important factors in calculation.

Total frictional torque M_R (calculation of axially loaded cylindrical roller bearings, see page 58):

$$M_R = M_0 + M_1$$

Frictional energy N_R:

$$N_R = M_R \cdot \frac{n}{9550}$$

Frictional torque as a function of speed for $\nu \cdot n \geqq 2\,000$:

$$M_0 = f_0 \cdot (\nu \cdot n)^{2/3} \cdot d_M{}^3 \cdot 10^{-7}$$

Frictional torque as a function of speed for $\nu \cdot n < 2\,000$:

$$M_0 = f_0 \cdot 160 \cdot d_M{}^3 \cdot 10^{-7}$$

Frictional torque as a function of load for cylindrical roller bearings:

$$M_1 = f_1 \cdot F \cdot d_M$$

Frictional torque as a function of load for ball bearings, tapered roller bearings and spherical roller bearings:

$$M_1 = f_1 \cdot P_1 \cdot d_M$$

M_R Nmm
Total frictional torque

M_0 Nmm
Frictional torque as a function of speed

M_1 Nmm
Frictional torque as a function of load

N_R W
Frictional energy

n min^{-1}
Operating speed

f_0 –
Bearing factor for frictional torque as a function of speed, *Figure 2*, page 55 and tables from page 55 to page 57

f_1 –
Bearing factor for frictional torque as a function of load, see tables from page 55 to page 57

ν mm^2s^{-1}
Kinematic viscosity of lubricant at operating temperature.
In the case of grease, the decisive factor is the viscosity of the base oil at operating temperature

F_r, F_a N
Radial load for radial bearings, axial load for axial bearings

P_1 N
Decisive load for frictional torque.
For ball bearings, tapered roller bearings and spherical roller bearings, see table, page 57

d_M mm
Mean bearing diameter (d + D)/2.

Bearing factors

The bearing factors f_0 and f_1 are mean values derived from series of tests and correspond to the data given in ISO 15 312.

They are valid for bearings that have undergone running-in and have uniform distribution of lubricant. In the freshly greased state, the bearing factor f_0 can be two to five times higher.

If oil bath lubrication is used, the oil level must reach the centre of the lowest rolling element. If the oil level is higher, f_0 may be up to 3 times the value given in the table, *Figure 2*.

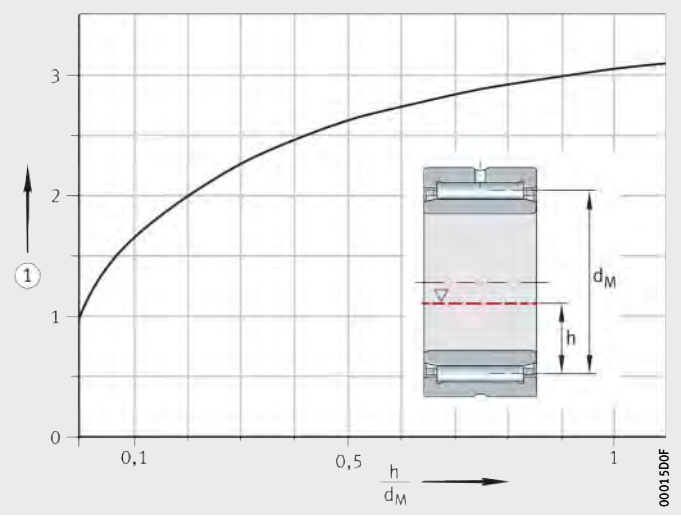

① Increase factor for bearing factor f_0
h = oil level
d_M = mean bearing diameter (d +D)/2

Figure 2
Increase in the bearing factor f_0, as a function of the oil level

Bearing factors for cylindrical roller bearings, full complement

Series	Bearing factor f_0		Bearing factor f_1
	Grease, oil mist	Oil bath, recirculating oil	
SL1818	3	5	0,00055
SL1829	4	6	
SL1830	5	7	
SL1822	5	8	
SL0148, SL0248	6	9	
SL0149, SL0249	7	11	
SL1923	8	12	
SL1850	9	13	

Bearing factors for cylindrical roller bearings with cage

Series	Bearing factor f_0		Bearing factor f_1
	Grease, oil mist	Oil bath, recirculating oil	
LSL1923	1	3,7	0,00020
2..-E	1,3	2	0,00030
3..-E			0,00035
4			0,00040
10, 19			0,00020
22..-E	2	3	0,00040
23..-E	2,7	4	0,00040
30	1,7	2,5	0,00040

Bearing factors for axial roller bearings

Series	Bearing factor f_0		Bearing factor f_1
	Grease, oil mist	Oil bath, recirculating oil	
811, K811	2	3	0,0015
812, K812			
893, K893			
894, K894			

Bearing factors for tapered roller bearings

Series	Bearing factor f_0		Bearing factor f_1
	Grease, oil mist	Oil bath, recirculating oil	
302, 303, 320, 329, 330	2	3	0,0004
313, 322, 323, 331, 332	3	4,5	

Bearing factors for axial and radial spherical roller bearings

Series	Bearing factor f_0		Bearing factor f_1
	Grease, oil mist	Oil bath, recirculating oil	
213	2,3	3,5	$0{,}0005 \cdot (P_0/C_0)^{0,33}$
222	2,7	4	
223	3	4,5	$0{,}0008 \cdot (P_0/C_0)^{0,33}$
230, 239			$0{,}00075 \cdot (P_0/C_0)^{0,5}$
231	3,7	5,5	$0{,}0012 \cdot (P_0/C_0)^{0,5}$
232	4	6	$0{,}0016 \cdot (P_0/C_0)^{0,5}$
240	4,3	6,5	$0{,}0012 \cdot (P_0/C_0)^{0,5}$
241	4,7	7	$0{,}0022 \cdot (P_0/C_0)^{0,5}$
292..-E	1,7	2,5	0,00023
293..-E	2	3	0,00030
294..-E	2,2	3,3	0,00033

Bearing factors for deep groove ball bearings

Series	Bearing factor f_0		Bearing factor f_1
	Grease, oil mist	Oil bath, recirculating oil	
618	1,1	1,7	$0{,}0005 \cdot (P_0/C_0)^{0,5}$
160	1,1	1,7	$0{,}0007 \cdot (P_0/C_0)^{0,5}$
60, 619	1,1	1,7	
62	1,3	2	$0{,}0009 \cdot (P_0/C_0)^{0,5}$
63, 64	1,5	2,3	

Bearing factors for angular contact ball bearings

Series	Bearing factor f_0		Bearing factor f_1
	Grease, oil mist	Oil bath, recirculating oil	
70..-B	1,3	2	$0{,}001 \cdot (P_0/C_0)^{0,33}$
72..-B			
73..-B	2	3	

Bearing factors for four point contact bearings

Series	Bearing factor f_0		Bearing factor f_1
	Grease, oil mist	Oil bath, recirculating oil	
QJ2, QJ3	2,7	4	$0{,}001 \cdot (P_0/C_0)^{0,33}$

Bearing factors for axial deep groove ball bearings

Series	Bearing factor f_0		Bearing factor f_1
	Grease, oil mist	Oil bath, recirculating oil	
511, 512, 513, 514	1	1,5	$0{,}0012 \cdot (F_a/C_0)^{0,33}$

Decisive load for ball bearings, tapered roller bearings and spherical roller bearings

Bearing type	Single bearing P_1	Bearing pair P_1
Deep groove ball bearings	$3{,}3 \cdot F_a - 0{,}1 \cdot F_r$	–
Angular contact ball bearings, single row	$F_a - 0{,}1 \cdot F_r$	$1{,}4 \cdot F_a - 0{,}1 \cdot F_r$
Four point contact bearings	$1{,}5 \cdot F_a + 3{,}6 \cdot F_r$	–
Tapered roller bearings	$2 \cdot Y \cdot F_a$ or F_r, use the greater value	$1{,}21 \cdot Y \cdot F_a$ or F_r, use the greater value
Spherical roller bearings	$1{,}6 \cdot F_a/e$ if $F_a/F_r > e$ $F_r\{1 + 0{,}6 \cdot [F_a/(e \cdot F_r)]^3\}$ if $F_a/F_r \leqq e$	

For $P_1 \leqq F_r$, $P_1 = F_r$ applies.

Cylindrical roller bearings under axial load

In cylindrical roller bearings under axial load, sliding friction between the end faces of the rolling elements and the ribs on the rings leads to an additional frictional torque M_2.

The total frictional torque is therefore calculated as follows:

$$M_R = M_0 + M_1 + M_2$$

$$M_2 = f_2 \cdot F_a \cdot d_M$$

$$A = k_B \cdot 10^{-3} \cdot d_M{}^{2,1}$$

M_R Nmm
Total frictional torque

M_0 Nmm
Frictional torque as a function of speed

M_1 Nmm
Frictional torque as a function of radial load

M_2 Nmm
Frictional torque as a function of axial load

f_2 –
Factor as a function of the bearing series, *Figure 3* and *Figure 4*, page 59

A –
Bearing parameter according to equation

F_a N
Axial dynamic bearing load

k_B –
Factor as a function of the bearing series, see table, page 59

d_M mm
Mean bearing diameter (d + D)/2.

The bearing factors f_2 are subject to wide scatter. They are valid for recirculating oil lubrication with an adequate quantity of oil.
The curves must not be extrapolated, *Figure 3* and *Figure 4*, page 59.

Bearings of TB design

In the case of bearings of TB design, the axial load carrying capacity has been significantly improved through the use of new calculation and manufacturing methods.

A special curvature on the end faces of the rollers ensures optimum contact conditions between the roller and rib.
As a result, the axial contact pressures on the rib are significantly minimised and a lubricant film capable of supporting higher loads is formed. Under normal operating conditions, wear and fatigue at the rib contact running and roller end faces is completely eliminated.

In addition, the axial frictional torque is reduced by up to 50%.
The bearing temperature during operation is therefore significantly lower.

Cylindrical roller bearings of standard design

f_2 = bearing factor
ν = operating viscosity
n = operating speed
d_M = mean bearing diameter
$\nu \cdot n \cdot d_M$ = operating parameter
F_a = axial dynamic bearing load
A = bearing parameter

Figure 3
Bearing factor f_2,
as a function of operating parameter

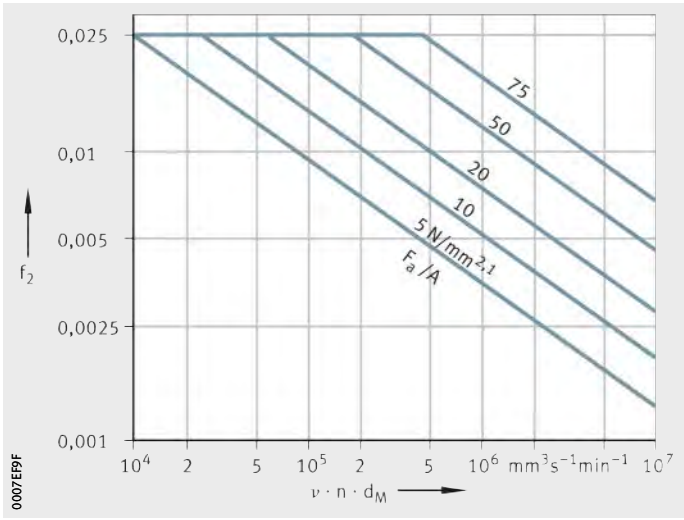

Cylindrical roller bearings of TB design

f_2 = bearing factor
ν = operating viscosity
n = operating speed
d_M = mean bearing diameter
$\nu \cdot n \cdot d_M$ = operating parameter
F_a = axial dynamic bearing load
A = bearing parameter

Figure 4
Bearing factor f_2,
as a function of operating parameter

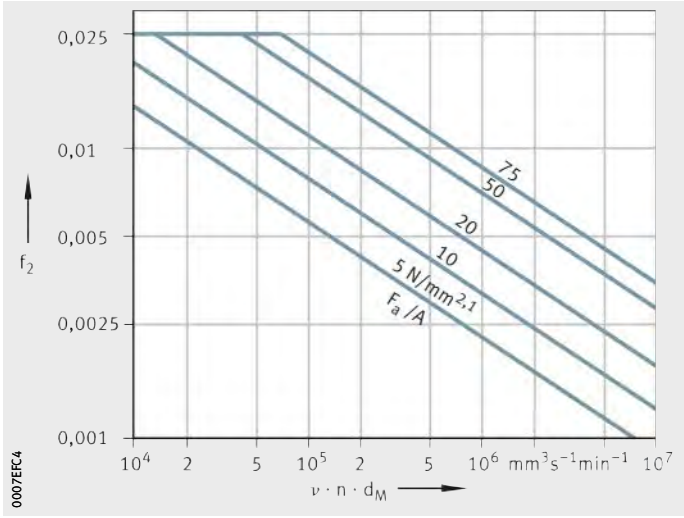

Bearing factor k_B

Bearing series	Factor k_B
SL1818, SL0148	4,5
SL1829, SL0149	11
SL1830, SL1850	17
SL1822	20
LSL1923	28
SL1923	30
NJ2..-E, NJ22..-E, NUP2..-E, NUP22..-E	15
NJ3..-E, NJ23..-E, NUP3..-E, NUP23..-E	20
NJ4	22

Speeds

On the basis of DIN 732-1, calculation of the thermal reference speed n_B has been standardised in ISO 15 312. The calculation of reference speeds has been matched to this standard.
As a result, the values are different from the previous catalogue data.

The symbols used in the equations have been matched to the international standard.

Thermal reference speed

The thermal reference speed n_B is used as an ancillary value when calculating the thermally safe operating speed n_ϑ. It is the speed at which, under defined reference conditions, a bearing temperature of +70 °C is achieved.

Reference conditions

The reference conditions are based on the usual operating conditions of the most significant bearing types and sizes.

They are defined in ISO 15 312 as follows:

- mean ambient temperature ϑ_{Ar} = +20 °C
- mean bearing temperature at the outer ring ϑ_r = +70 °C
- load on radial bearings $P_{1r} = 0{,}05 \cdot C_{0r}$
- load on axial bearings $P_{1a} = 0{,}02 \cdot C_{0a}$
- the operating viscosities (axial bearings according to DIN 732-1) For radial bearings, they are such that approximately the same reference speeds are achieved for oil and grease lubrication.
  - radial bearings: 12 mm^2s^{-1} (ISO VG class 32)
  - axial spherical roller bearings: 24 mm^2s^{-1} (ISO VG class 68)
  - axial cylindrical roller bearings: 48 mm^2s^{-1} (ISO VG class 220)
- heat dissipation via the bearing seating surfaces, see equations.

For radial bearings, bearing seat $A_r \leqq 50\,000$ mm^2:

$$q_r = 0{,}016\ W/mm^2$$

For radial bearings, bearing seat $A_r > 50\,000$ mm^2:

$$q_r = 0{,}016 \cdot \left(\frac{A_r}{50\,000}\right)^{-0{,}34}\ W/mm^2$$

For axial bearings, bearing seat $A_r \leqq 50\,000$ mm^2:

$$q_r = 0{,}020\ W/mm^2$$

For axial bearings, bearing seat $A_r > 50\,000$ mm^2:

$$q_r = 0{,}020 \cdot \left(\frac{A_r}{50\,000}\right)^{-0{,}16}\ W/mm^2$$

Limiting speed

The limiting speed n_G is based on practical experience and takes account of additional criteria such as smooth running, sealing function and centrifugal forces.

The limiting speed must not be exceeded even under favourable operating and cooling conditions.

Thermally safe operating speed

The thermally safe operating speed n_ϑ is calculated according to DIN 732-2 (draft).
The basis for the calculation is the heat balance in the bearing, the equilibrium between the frictional energy as a function of speed and the heat dissipation as a function of temperature.
When conditions are in equilibrium, the bearing temperature is constant.

The permissible operating temperature determines the thermally safe operating speed n_ϑ of the bearing. The preconditions for calculation are correct mounting, normal operating clearance and constant operating conditions.

The calculation method is not valid for:

- sealed bearings with contact seals, since the maximum speed is restricted by the permissible sliding velocity at the seal lip
- back-up rollers
- axial deep groove and axial angular contact ball bearings.

The limiting speed n_G must always be observed.

Calculation of the thermally safe operating speed

The thermally safe operating speed n_ϑ is a product of the reference speed n_B and the speed ratio f_n:

$$n_\vartheta = n_B \cdot f_n$$

The speed ratio is derived from *Figure 1*, page 63:

$$k_L \cdot f_n^{5/3} + k_P \cdot f_n = 1$$

In the normal range $0{,}01 < k_L < 10$ and $0{,}01 < k_P < 10$, f_n can be calculated using an approximation equation:

$$f_n = \frac{490{,}77}{1 + 498{,}78 \cdot k_L^{0{,}599} + 852{,}88 \cdot k_P^{0{,}963} - 504{,}5 \cdot k_L^{0{,}055} \cdot k_P^{0{,}832}}$$

Heat dissipation via the bearing seating surfaces $\dot{Q}_S$, *Figure 2*, page 63:

$$\dot{Q}_S = k_q \cdot A_r \cdot \Delta\vartheta_A$$

Heat dissipation by the lubricant $\dot{Q}_L$:

$$\dot{Q}_L = 0{,}0286 \frac{kW}{l/min \cdot K} \cdot \dot{V}_L \cdot \Delta\vartheta_L$$

Total dissipated heat flow $\dot{Q}$:

$$\dot{Q} = \dot{Q}_S + \dot{Q}_L - \dot{Q}_E$$

Lubricant film parameter k_L:

$$k_L = 10^{-6} \cdot \frac{\pi}{30} \cdot n_B \cdot \frac{10^{-7} \cdot f_0 \cdot (\nu \cdot n_B)^{\frac{2}{3}} \cdot d_M^{\,3}}{\dot{Q}}$$

Load parameter k_P:

$$k_P = 10^{-6} \cdot \frac{\pi}{30} \cdot n_B \cdot \frac{f_1 \cdot P_1 \cdot d_M}{\dot{Q}}$$

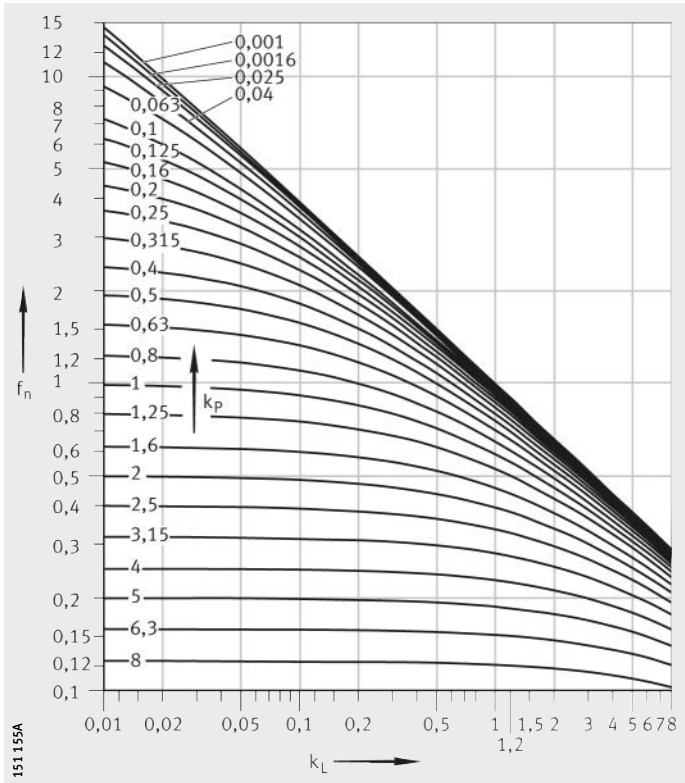

f_n = speed ratio
k_L = lubricant film parameter
k_p = load parameter

Figure 1
Speed ratio f_n

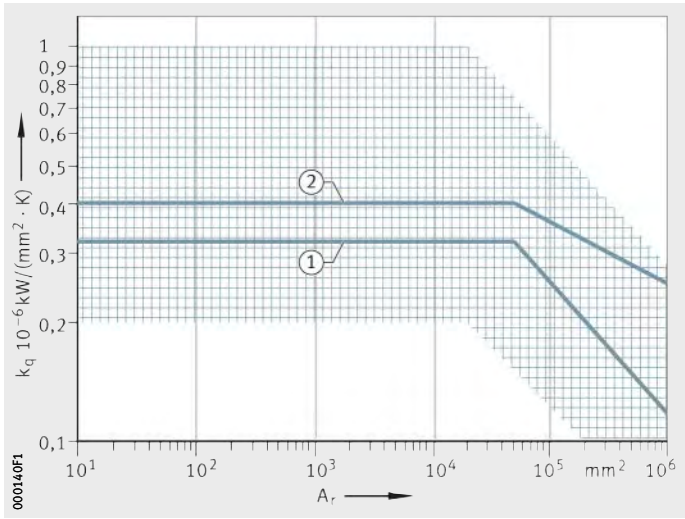

k_q = heat transfer coefficient
A_r = bearing seating surface
① Reference condition for radial bearings
② Reference condition for axial bearings

Figure 2
Heat transfer coefficient k_q
as a function
of the bearing seating surface

Symbols, units and definitions

A_r	mm²	
Bearing seating surface for		
radial bearings:		$A_r = \pi \times B \times (D + d)$
axial bearings:		$A_r = \pi/2 \times (D^2 - d^2)$
tapered roller bearings:		$A_r = \pi \times T \times (D + d)$
axial spherical roller bearings:		$A_r = \pi/4 \times (D^2 + d_1{}^2 - D_1{}^2 - d^2)$

Symbols, units and definitions continued

B mm
Bearing width

d mm
Bearing bore diameter

D mm
Bearing outside diameter

d_1 mm
Outside diameter of shaft locating washer

D_1 mm
Inside diameter of housing locating washer

d_M mm
Mean bearing diameter (D + d)/2

f_0 –
Bearing factor for frictional torque as a function of speed, see section Bearing factors, page 55

f_1 –
Bearing factor for frictional torque as a function of load, see section Bearing factors, page 55

f_n –
Speed ratio, *Figure 1*, page 63

k_L –
Lubricant film parameter

k_P –
Load parameter

k_q 10^{-6} kW/(mm^2 · K)
Heat transfer coefficient of bearing seating surface, *Figure 2*, page 63. It is dependent on the housing design and size, the housing material and the mounting position. In normal applications, the heat transfer coefficient for bearing seating surfaces up to 25 000 mm^2 is between 0,2 and 1,0 · 10^{-6} kW/(mm^2 · K)

n_ϑ min^{-1}
Thermally safe operating speed

n_B min^{-1}
Reference speed, see dimension tables

P_1 N
Radial load for radial bearings, axial load for axial bearings

q_r W/mm^2
Heat flow density

$\dot{Q}$ kW
Total dissipated heat flow

$\dot{Q}_E$ kW
Heat flow due to heating by external source

$\dot{Q}_L$ kW
Heat flow dissipated by the lubricant

$\dot{Q}_S$ kW
Heat flow dissipated via the bearing seating surfaces

T mm
Total width of tapered roller bearing

$\dot{V}_L$ l/min
Oil flow

$\Delta\vartheta_A$ K
Difference between mean bearing temperature and ambient temperature

$\Delta\vartheta_L$ K
Difference between oil outlet temperature and oil inlet temperature

ν mm^{2}s^{-1}
Kinematic viscosity of lubricant at operating temperature.

Lubrication

Principles

Lubrication and maintenance are important for the reliable operation and long operating life of rolling bearings.

Functions of the lubricant

The lubricant should, *Figure 1*:

- form a lubricant film on the contact surfaces that is sufficiently capable of supporting loads and thus preventing wear and premature fatigue ①
- dissipate heat in the case of oil lubrication ②
- give additional sealing of the bearing, in the case of grease lubrication, against the entry of both solid and fluid contaminants ③
- reduce the running noise ④
- protect the bearing against corrosion ⑤.

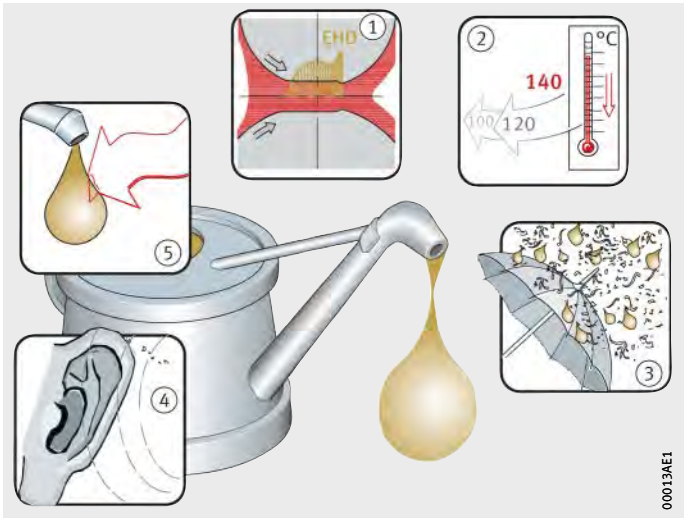

① Formation of a lubricant film capable of supporting loads
② Heat dissipation in the case of oil lubrication
③ Sealing of the bearing against external contaminants in the case of grease lubrication
④ Damping of running noise
⑤ Protection against corrosion

Figure 1
Functions of the lubricant

Selection of the type of lubrication

It should be determined as early as possible in the design process whether bearings should be lubricated using grease or oil.

The following factors are decisive in determining the type of lubrication and quantity of lubricant:

- the operating conditions
- the type and size of the bearing
- the adjacent construction
- the lubricant feed.

Criteria for grease lubrication

In the case of grease lubrication, the following criteria must be considered:

- very little design work required
- the sealing action
- the reservoir effect
- long operating life with little maintenance work (lifetime lubrication possible in certain circumstances)
- if relubrication is required, it may be necessary to provide collection areas for old grease and feed ducts
- no heat dissipation by the lubricant
- no rinsing out of wear debris and other particles.

Criteria for oil lubrication

In the case of oil lubrication, the following criteria must be considered:

- good lubricant distribution and supply to contact areas
- dissipation of heat possible from the bearing (significant principally at high speeds and/or loads)
- rinsing out of wear debris
- very low friction losses with minimal quantity lubrication
- more work required on feed and sealing.

Under extreme operating conditions (such as very high temperatures, vacuum, aggressive media), it may be possible to use special lubrication methods such as solid lubricants in consultation with the engineering service.

Design of lubricant feed

The feed lines and lubrication holes in the housings and shafts, *Figure 2* and *Figure 3* must:

- lead directly to the lubrication hole in the rolling bearing
- be as short as possible
- be provided individually for each bearing.

Ensure that the feed lines are filled, *Figure 3*; the feed line should be bled if necessary.

Follow the instructions provided by the lubrication device manufacturer.

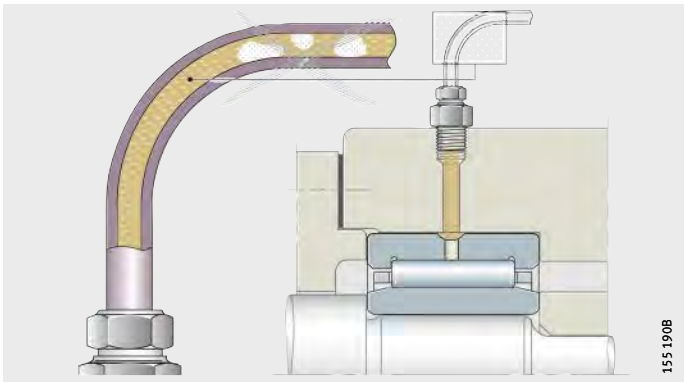

Figure 2
Lubricant feed lines

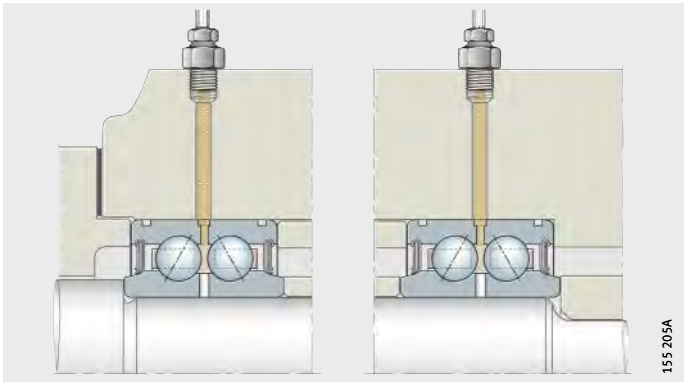

Figure 3
Arrangement of feed to more than one bearing on a shaft

Grease lubrication

Greases can be differentiated in terms of their thickeners and base oils. The base oils of greases are covered by the information in the section Oil lubrication, page 85.

Composition of a grease

Conventional greases have metal soaps as thickeners and a mineral base oil. They also contain additives. These have a specific influence on, for example, the characteristics in relation to wear prevention, corrosion prevention or resistance to ageing. These combinations of additives are not, however, fully effective across every temperature and load range.

Greases exhibit widely varying behaviour in response to environmental influences such as temperature and moisture.

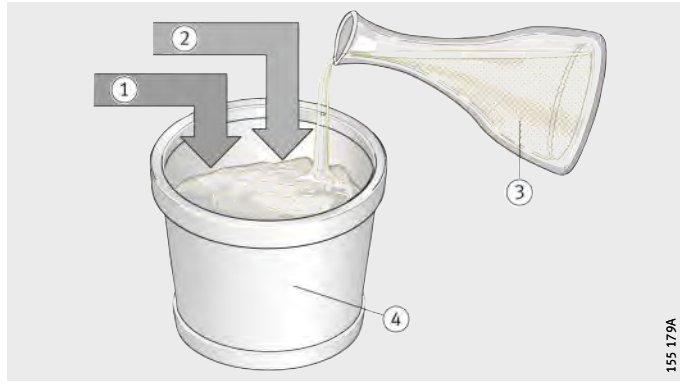

① Thickener
② Additives
③ Base oil
④ Grease

Figure 4
Type of grease

Lubricants must always be checked for their compatibility with:

- other lubricants
- anti-corrosion agents
- thermoplastics, thermosets and elastomers
- light and non-ferrous metals
- coatings
- colouring agents and paints
- the environment.
  When considering compatibility with the environment, attention must be paid to toxicity, biodegradability and water pollution class.

Type of grease

The characteristics of a grease are dependent on:

- the base oil
- the viscosity of the base oil (this is important for the speed range)
- the thickener
  (the shear strength is significant for the speed range)
- the additives.

Consistency of greases

Greases are subdivided into consistency grades
(NLGI grades to DIN 51 818).

For rolling bearings, grades 1, 2, 3 should be used in preference, *Figure 5*.

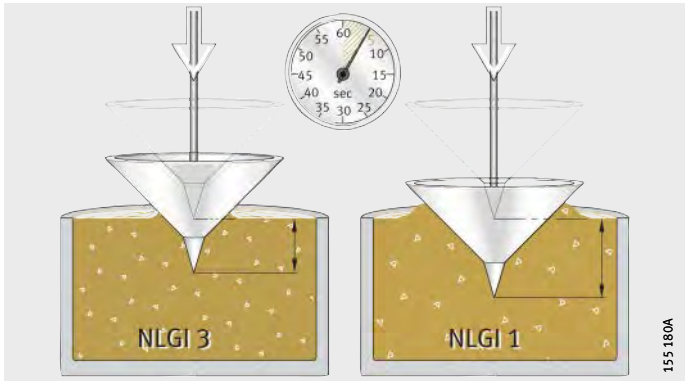

Figure 5
Consistency of greases

Selection of suitable grease

Rolling bearing greases K to DIN 51 825 are suitable.

Greases should be selected in accordance with the operating conditions of the bearing:

- temperature
- compressive load, see page 72
- speed, see page 72
- the presence of water and moisture, see page 73.

Operating temperature range

The operating temperature range of the grease must correspond to the range of possible operating temperatures in the rolling bearing.

Grease manufacturers indicate an operating temperature range for their rolling bearing greases K in accordance with DIN 51 825.

The upper value is determined in accordance with DIN 51 821 by means of testing on the FAG rolling bearing grease test rig FE 9. At the upper operating temperature, a 50% failure probability (F_{50}) of at least 100 hours must be achieved in this test.

The lower value is defined in accordance with DIN 51 825 by means of flow pressure. The flow pressure of a grease is the pressure required to press a stream of grease through a defined nozzle. For greases of type K, the flow pressure at the lower operating temperature must be less than 1 400 mbar.

The use of flow pressure in determining the lower operating temperature only indicates, however, whether the grease can be moved at this temperature. This cannot be used to give an indication of its suitability for use in rolling bearings at low temperatures.

In addition to the lower operating temperature of a grease, therefore, the low temperature frictional torque is also determined in accordance with ASTM D 1478 or IP 186/93. At the lower operating temperature, the starting torque must not exceed 1 000 Nmm and the running torque must not exceed 100 Nmm.

Schaeffler recommends that greases should be used in accordance with the bearing temperature normally occurring in the standard operating range in order to achieve a reliable lubricating action and an acceptable grease operating life, *Figure 6*.

At low temperatures, greases release very little base oil. This can result in lubricant starvation. Schaeffler therefore recommends that greases are not used below the lower continuous limit temperature $T_{lowerlimit}$, *Figure 6*. This is approx. 20 K above the lower operating temperature of the grease as stated by the grease manufacturer.

The upper continuous limit temperature $T_{upperlimit}$ must not be exceeded if a temperature-induced reduction in the grease operating life is to be avoided; see section Grease operating life, page 76.

At consistently low temperatures (for example in cold store applications), it must be ensured that the grease releases sufficient oil in relation to the bearing type.

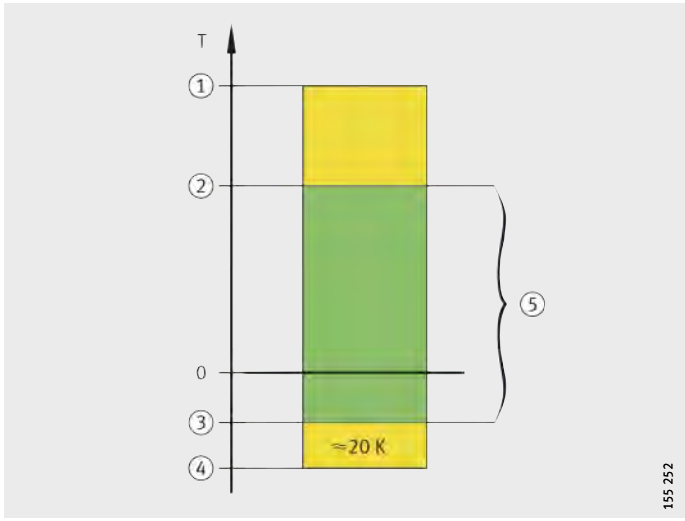

T = operating temperature
① Upper operating temperature according to grease manufacturer
② $T_{upperlimit}$
③ $T_{lowerlimit}$
④ Lower operating temperature according to grease manufacturer
⑤ Standard operating range

Figure 6
Operating temperature range

Pressure properties

The viscosity at operating temperature must be sufficiently high for the formation of a lubricant film capable of supporting loads. At high loads, greases with EP characteristics (EP = Extreme Pressure) and high base oil viscosity should be used (KP grease to DIN 51 825). Such greases should also be used for bearings with substantial sliding or line contact.

Silicone greases should only be used at low loads ($P \leqq 0{,}03 \cdot C$).

Greases with solid lubricants should preferably be used for applications with mixed or boundary friction conditions. The solid lubricant particle size must not exceed 5 µm.

Speed

Greases should be selected in accordance with the speed parameter $n \cdot d_M$ for grease, see table, page 74:

- For rolling bearings running at high speeds or with a low starting torque, greases with a high speed parameter should be used.
- For bearings running at low speeds, greases with a low speed parameter should be used.

Under centrifugal accelerations $>$ 500 g, separation (of the thickener and base oil) may occur. In this case, please consult the lubricant manufacturer.

The consistency of polycarbamide greases can be altered by shear stresses to a greater extent than that of metal soap greases.

Water and moisture

Water in the grease has a highly detrimental effect on the operating life of the bearing:

- The static behaviour of greases in the presence of water is assessed in accordance with DIN 51 807, *Figure 7*.
- The anti-corrosion characteristics can be tested according to DIN 51 802 (Emcor test) (information is given in the datasheets from the grease manufacturers).

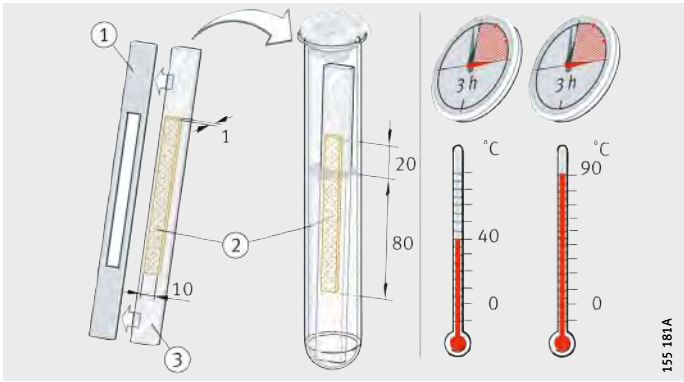

① Blank
② Grease specimen
③ Glass slide

Figure 7
Behaviour in the presence of water in accordance with DIN 51 807

Greases with special suitability

Many of the rolling bearings supplied by Schaeffler Technologies have a grease filling. The greases used have proved particularly suitable for the applications in mechanical-dynamic tests, see table.

Greases

Designation[1]	Classification	Type of grease
GA01	Ball bearing grease for $T < +180$ °C	Polycarbamide Ester oil
GA02	Ball bearing grease for $T < +160$ °C	Polycarbamide SHC
GA13	Standard ball bearing and insert bearing grease for $D > 62$ mm	Lithium soap Mineral oil
GA14	Low-noise ball bearing grease for $D \leqq 62$ mm	Lithium soap Mineral oil
GA15	Low-noise ball bearing grease for high speeds	Lithium soap Ester oil
GA22	Free-running grease with low frictional torque	Lithium soap Ester oil
GA08	Grease for line contact	Lithium complex soap Mineral oil
GA11	Rolling bearing grease resistant to media for temperatures up to +250 °C	PTFE Alkoxyfluoroether
GA47	Rolling bearing grease resistant to media for temperatures up to +140 °C	Barium complex soap Mineral oil

1) GA stands for **G**rease **A**pplication Group, based on Grease Spec 00.

2) The upper continuous limit temperature $T_{upperlimit}$ must not be exceeded if a temperature-induced reduction in grease operating life is to be avoided.

3) Dependent on bearing type.

Operating temperature range °C	Upper continuous limit temperature $T_{upperlimit}$ [2] °C	NLGI grade	Speed parameter $n \cdot d_M$ $min^{-1} \cdot mm$	ISO VG class (base oil) [3]	Designation [1]	Recommended Arcanol grease for relubrication
–40 to +180	+115	2 to 3	600 000	68 to 220	**GA01**	–
–40 to +160	+85	2 to 3	500 000	68 to 220	**GA02**	–
–30 to +140	+75	3	500 000	68 to 150	**GA13**	**MULTI3**
–30 to +140	+75	2	500 000	68 to 150	**GA14**	**MULTI2**
–50 to +150	+70	2 to 3	1 000 000	22 to 32	**GA15**	–
–50 to +120	+70	2	1 000 000	10 to 22	**GA22**	–
–30 to +140	+95	2 to 3	500 000	150 to 320	**GA08**	**LOAD150**
–40 to +250	+180	2	300 000	460 to 680	**GA11**	**TEMP200**
–20 to +140	+70	1 to 2	350 000	150 to 320	**GA47**	–

Arcanol rolling bearing greases

For users who wish to charge their rolling bearings with grease themselves, there is a range of particularly suitable Arcanol rolling bearing greases.

The greases in the range are graded in terms of their performance capability such that they can be used to cover almost all areas of application, see section Arcanol rolling bearing greases, page 1046.

Grease operating life

The grease operating life t_{fG} applies where this is less than the calculated bearing life and the bearings are not lubricated.

A guide value can be determined in approximate terms as follows:

$$t_{fG} = t_f \cdot K_T \cdot K_P \cdot K_R \cdot K_U \cdot K_S$$

t_{fG} h
Guide value for grease operating life

t_f h
Basic grease operating life

K_T, K_P, K_R, K_U, K_S –
Correction factors for temperature, load, oscillation, environment, vertical shaft, see page 78 to page 81.

If a grease operating life > 3 years is required, this should be discussed with the lubricant manufacturer.

Basic grease operating life

This applies under the preconditions according to table.

Preconditions for the basic grease operating life

Criterion	Precondition
Bearing temperature	< Upper continuous limit temperature $T_{upperlimit}$
Load ratio	$C_0/P = 20$
Speed and load	Constant
Load in main direction	Radial in radial bearings, axial in axial bearings
Axis of rotation	Horizontal for radial bearings
Inner ring	Rotating
Environmental influences	No disruptive influences

The basic grease operating life t_f is dependent on the bearing-specific speed parameter $k_f \cdot n \cdot d_M$ and is calculated using *Figure 8*.

k_f –
Bearing type factor, see table Factor k_f as a function of bearing type, page 77

n
Operating speed or equivalent speed

d_M mm
Mean bearing diameter (d + D)/2.

Calculation of basic grease operating life

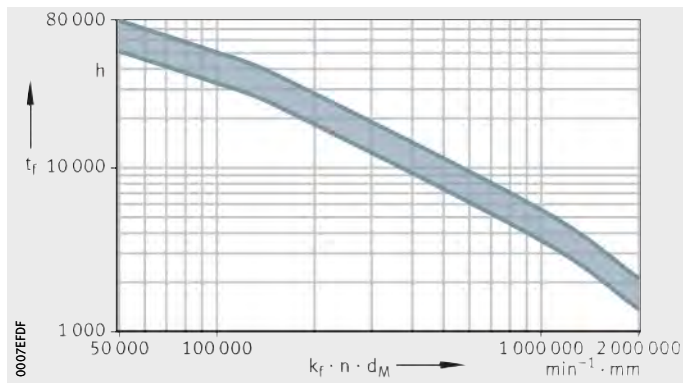

t_f = basic grease operating life
$k_f \cdot n \cdot d_M$ = bearing-specific speed parameter

Figure 8
Calculation of basic grease operating life t_f

Factor k_f as a function of bearing type

Bearing type	Factor k_f
Deep groove ball bearings, single row	1
Angular contact ball bearings, single row	1,6
Angular contact ball bearings, double row	2
Four point contact bearings	1,6
Axial deep groove ball bearings	5,5
Axial angular contact ball bearings, double row	1,4
Cylindrical roller bearings, single row, with constant axial load	3,25
Cylindrical roller bearings, single row, with or without alternating axial load	2
Cylindrical roller bearings, double row[1)]	3,5
Cylindrical roller bearings, full complement	5,3
Tapered roller bearings	4
Barrel roller bearings	10
Spherical roller bearings without central rib	8
Spherical roller bearings with central rib	10,5
Back-up rollers	20
Cylindrical roller bearings LSL	3,1
Axial cylindrical roller bearings	58

1) Not valid for super precision cylindrical roller bearings NN30 and NNU49. In this case, please use the calculation scheme in the publication Super Precision Bearings, SP 1.

Guidelines on calculating the grease operating life

Combined rolling bearings

The radial and axial bearing components must be calculated separately; the decisive value is the shorter grease operating life.

Rotating outer ring

If the outer ring is the rotating component, there may be a reduction in the grease operating life.

In the case of back-up rollers:

- the angular misalignment must be zero
- the effect of the rotating outer ring on the grease operating life is taken into consideration in the bearing type factor k_f.

Restrictions

The grease operating life cannot be determined using the method described in the following cases:

- if the grease can leave the bearing arrangement
  - if there is excessive evaporation of the base oil
  - in bearing positions without seals
  - in axial bearings with a horizontal axis of rotation
- if air is sucked into the rolling bearing during operation
  - this can cause the grease to oxidise
- in combined rotary and linear motion
  - the grease is distributed over the whole stroke length
- if contamination, water or other fluids enter the bearings
- for spindle bearings
- for high precision bearings for combined loads
- for high precision cylindrical roller bearings.

The additional guidelines on lubrication in the product sections must be observed.

Correction factors for determining the grease operating life

Temperature factor K_T

If the bearing temperature is higher than the continuous limit temperature $T_{upperlimit}$, K_T must be determined from the diagram, *Figure 9*.

The diagram should not be used if the bearing temperature is higher than the upper operating temperature of the grease used, see table Greases, page 74. If necessary, a different grease should be selected or contact should be made with the Schaeffler engineering service.

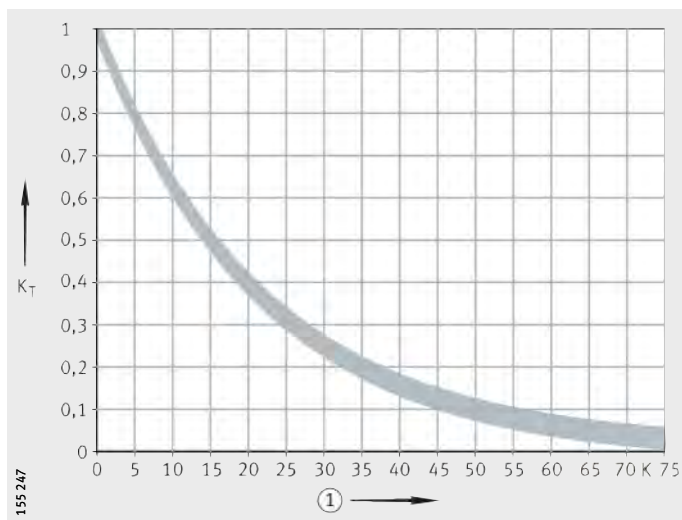

K_T = temperature factor
① K above $T_{upperlimit}$

Figure 9
Temperature factor

Load factor K_P

The factor K_P is dependent on the bearing and describes the reduction at higher load (this places greater strain on the grease), *Figure 10* and table.

This is based on high-quality lithium soap greases

K_P = load factor
C_0 /P = ratio between basic static load rating and equivalent dynamic bearing load
①, ②, ③, ④ see table K_P factor

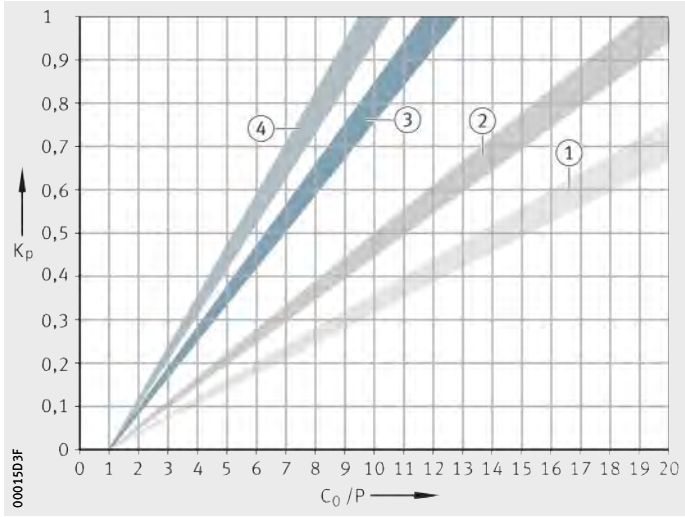

Figure 10
K_P factor for bearings

K_P factor

Curve[1)]	Bearing type
①	Axial angular contact ball bearings, double row
	Axial deep groove ball bearings
	Axial cylindrical roller bearings
②	Spherical roller bearings with central rib
	Cylindrical roller bearings, double row (excluding NN30)
	Back-up rollers
③	Cylindrical roller bearings LSL
	Tapered roller bearings
	Spherical roller bearings without central rib (E1)
	Barrel roller bearings
	Cylindrical roller bearings, full complement
	Cylindrical roller bearings, single row (constant or alternating load)
	Four point contact bearings
④	Deep groove ball bearings
	Angular contact ball bearings (single or double row)
	Self-aligning ball bearings

1) Curves: see *Figure 10*.

Oscillation factor K_R

The factor K_R applies for an angle of oscillation $\varphi < 180°$, *Figure 11* and *Figure 12*. Oscillating motion places a greater strain on the grease than does rotating motion.

In order to reduce fretting corrosion, the lubrication interval should be reduced.

If the rolling elements do not undergo complete rotation, please contact the Schaeffler engineering service.

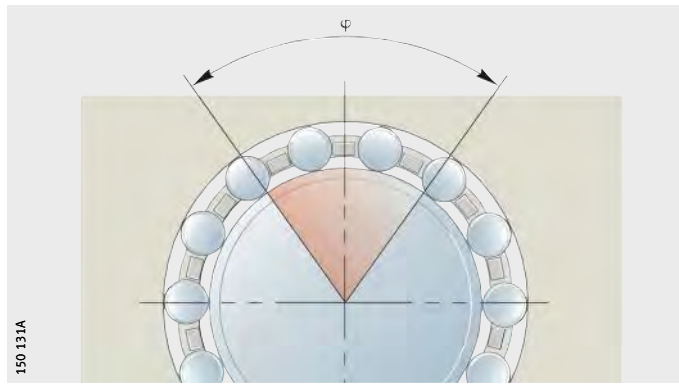

φ = angle of oscillation

Figure 11
Angle of oscillation

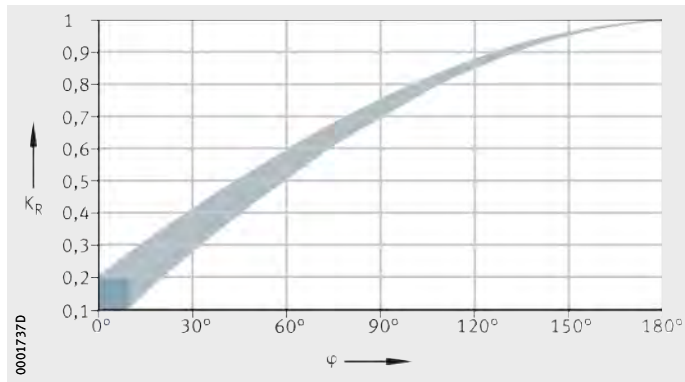

K_R = oscillation factor
φ = angle of oscillation

Figure 12
Oscillation factor

Factor K_U for environmental influences

The factor K_U takes account of the influences of moisture, shaking forces, slight vibration (leading to fretting corrosion) and shocks, see table Environmental factor K_U.

It does not take account of extreme environmental influences such as water, aggressive media, contamination, radiation and extreme vibrations such as those occurring in vibratory machines.

In relation to contamination, the influence of contamination on rating life calculation must also be noted, see section Load carrying capacity and life, page 30.

Environmental factor K_U

Environmental influence	Factor K_U
Slight	1
Moderate	0,8
Severe	0,5

Factor K_S for vertical shafts

If increased escape of grease is expected, for example in the case of radial bearings with a vertical axis of rotation, the factor K_S according to the table must be taken into consideration.

K_S factor

Arrangement of shaft	Factor K_S
Vertical (depending on sealing)	0,5 to 0,7
Other arrangement	1

Relubrication intervals

If rolling bearings are relubricated, attention must be paid to the lubrication interval in order to ensure reliable function of the bearings.

The precise lubrication interval should be determined by tests conducted under application conditions.

This should be carried out as follows:

- Sufficiently long observation periods must be used.
- The condition of the grease must be checked at regular intervals.

For reasons of operational reliability, relubrication intervals of > 1 year are not recommended.

Lubrication interval guide value

Experience shows that a guide value for most applications is:

$$t_{fR} = 0{,}5 \cdot t_{fG}$$

t_{fR} h
Guide value for relubrication interval

t_{fG} h
Guide value for grease operating life, see page 76.

Relubrication conditions

The grease used for relubrication must be the same as that used in initial greasing.

If different greases are used, their miscibility and compatibility must be checked; see section Miscibility, page 84.

Relubrication quantity

Due to the compact construction of the bearings, relubrication should be carried out using 50% to 80% of the initial greasing quantity (recommendation).

If feed lines filled with air are present, the filling volume of the feed lines should be included in calculation of the relubrication quantity.

Relubrication

Relubrication should always be carried out as follows:

- with the bearing still warm from operation and rotating if safe to do so
- before the bearing comes to rest if safe to do so
- before extended breaks in operation.

Relubrication should continue until a fresh collar of grease appears at the seal gaps. Old grease must be allowed to leave the bearing unhindered.

Grease reservoir

The initial greasing quantity is between 30% and 100% of the available volume in the bearing, dependent on the bearing type and operating conditions.

A grease reservoir can extend the grease operating life. The grease in the reservoir must be in constant contact with the grease on the raceway. Increasing the size of the grease reservoir does not lead to a proportional increase in the grease operating life.

The volume of the grease reservoir should correspond to the area in the bearing between the inner and outer ring (not taking account of the cage and rolling elements), *Figure 13* and *Figure 14*.

Evaporation of the base oil should be prevented by design measures, for example by sealing shields, *Figure 13* and *Figure 14*.

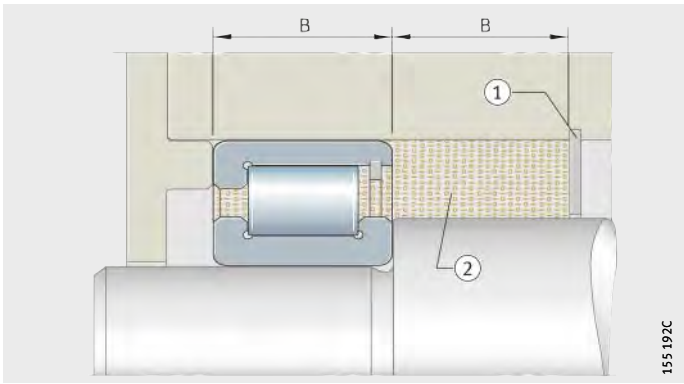

① Sealing shield
② Grease reservoir

Figure 13
Grease reservoir on one side

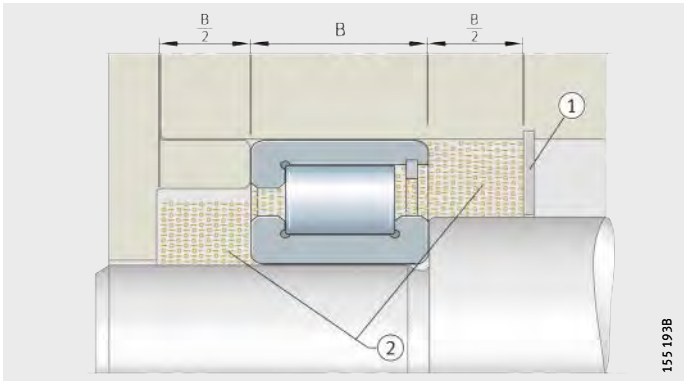

① Sealing shield
② Grease reservoir

Figure 14
Grease reservoir on both sides

Miscibility

Mixtures of greases should be avoided if at all possible.

Preconditions

If they are unavoidable, the following preconditions must be fulfilled:

- The base oil must be the same.
- The thickener types must match.
- The base oil viscosities must be similar (they must not differ by more than one ISO VG class).
- The consistency must be identical (NLGI grade).

Miscibility of greases must be always be agreed in consultation with the lubricant manufacturer.

Even when these preconditions are fulfilled, impairment of the performance capability of the mixed grease cannot be ruled out.

If a decision is taken to change to a different grease grade, the grease should be rinsed out if this is possible. Further relubrication should be carried out after a shortened period.

If incompatible greases are mixed, this can leading to considerable structural changes. Substantial softening of the grease mixture may also occur.

Definite statements on miscibility can only be obtained by means of suitable tests.

Storage

Experience shows that the greases used can generally be stored for 3 years.

Preconditions

The preconditions are:

- a closed room or store
- temperatures between 0 °C and +40 °C
- relative humidity no greater than 65%
- no influence of chemical agents (vapours, gases, fluids)
- the rolling bearings are sealed.

Lubricants age due to environmental influences. The information provided by lubricant manufacturers must always be observed.

After long periods of storage, the start-up frictional torque of greased bearings can be temporarily higher than normal.
The lubricity of the grease may also have deteriorated.

Since the lubrication characteristics of greases vary and different raw materials may be used for greases of the same name, Schaeffler cannot offer any guarantees either for the lubricants used by customers for relubrication or for their characteristics.

Oil lubrication

For the lubrication of rolling bearings, mineral oils and synthetic oils are essentially suitable.

Oils with a mineral oil base are used most frequently. They must fulfil at least the requirements according to DIN 51 517 or DIN 51 524.

Special oils, often synthetic oils, are used under extreme operating conditions or where there are special requirements relating to oil resistance.

In these cases, please consult the lubricant manufacturer or the Schaeffler engineering service.

Operating temperatures

The information provided by the lubricant manufacturer should be taken as authoritative.

Selection of suitable oil

The achievable bearing life and security against wear are higher with better separation of the contact surfaces by a lubricant film, *Figure 15* and section Load carrying capacity and life, page 30.

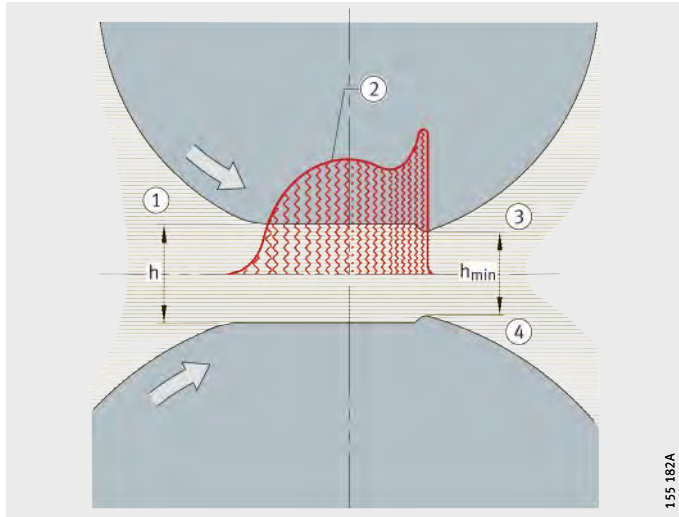

① Entry zone
② Pressure curve according to EHD theory
③ Exit zone
④ Lubricant

Figure 15
Lubricant film in the contact zones

Reference viscosity for mineral oils

The guide value for ν_1 is dependent on the mean bearing diameter d_M and the speed n. It takes account of the EHD theory of lubricant film formation and practical experience.

Depending on the operating speed, the oil at operating temperature must have at least the reference viscosity ν_1, *Figure 16*, page 86.

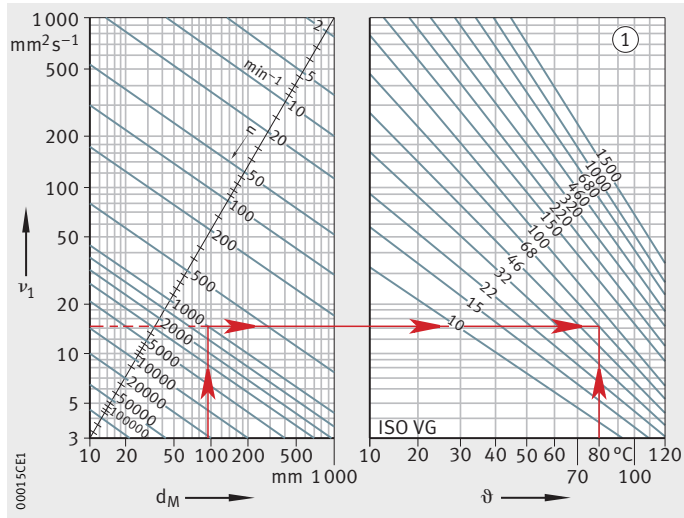

ν_1 = reference viscosity
d_M = mean bearing diameter (d + D)/2
n = operating speed
ϑ = operating temperature
① Viscosity mm^2s^{-1} at +40 °C

Figure 16
Reference viscosity and V/T diagram for mineral oils

Calculation of reference viscosity

The reference viscosity ν_1 is determined as follows:

- Assign ν_1 to a nominal viscosity with ISO VG between 10 and 1 500 (centre point viscosity to DIN 51 519).
- Round intermediate values to the nearest ISO VG (due to the steps between groups).

This method cannot be used for synthetic oils, since these have different V/P (viscosity/pressure) and V/T (viscosity/temperature) characteristics.

In these cases, please consult the Schaeffler engineering service.

Influence of temperature on viscosity

As the temperature increases, the viscosity of the oil decreases. This temperature-dependent change in the viscosity is described using the viscosity index VI. For mineral oils, the VI index should be at least 95.

When selecting the viscosity, the lower operating temperature must be taken into consideration, since the increasing viscosity will reduce the flowability of the lubricant. As a result, the level of power losses may increase.

A very long life can be achieved with a viscosity ratio $\kappa = \nu/\nu_1 = 3$ to 4 (ν = operating viscosity). Highly viscous oils do not, however, bring only advantages. In addition to the power losses arising from lubricant friction, there may be problems with the feed and removal of oil at low or even at normal temperatures.

The oil selected must be sufficiently viscous that it gives the highest possible fatigue life. It must also be ensured that the bearings are always supplied with adequate quantities of oil.

Pressure properties and anti-wear additives

If the bearings are subjected to high loads or if the operating viscosity ν is less than the reference viscosity ν_1, oils with anti-wear additives (type P to DIN 51 502) should be used.

Such oils are also necessary for rolling bearings with a substantial proportion of sliding contact (for example bearings with line contact).

These additives form boundary layers to reduce the harmful effects of metallic contact occurring at various points (wear).

The suitability of these additives varies and is normally heavily dependent on temperature. Their effectiveness can only be assessed by means of testing in the rolling bearing (for example on our test rig FE8 to DIN 51 819).



Silicone oils should only be used for low loads ($P \leqq 0{,}03 \cdot C$).

Compatibility

Before an oil is used, its behaviour must be checked in relation to plastics, seal materials (elastomers) and light and non-ferrous metals.

This must always be checked under dynamic loading and at operating temperature.

Synthetic oils must always be checked for their compatibility. The lubricant manufacturer must be consulted on this at the same time.

Miscibility

The mixing of different oils should be avoided wherever possible. In particular, the presence of different additive packages may lead to undesirable interactions.

In general, oils with a mineral oil base and the same classification are miscible, for example HLP can be mixed with HLP.
The viscosities should vary by no more than one ISO VG class.



Synthetic oils must always be checked for their compatibility. The lubricant manufacturer must be consulted on this at the same time.

Miscibility must be checked in advance for each individual case.

Cleanliness

The cleanliness of the oil influences the rating life of bearings, see also section Load carrying capacity and life, page 30.

Schaeffler therefore recommends that an oil filter should be provided; attention must be paid to the filtration rate. The filter mesh should be $< 25\ \mu m$.

Lubrication methods

The essential lubrication methods are:

- drip feed oil lubrication
- pneumatic oil lubrication
  (to protect the environment, this should be used as a substitute for oil mist lubrication)
- oil bath lubrication
  (immersion or sump lubrication)
- recirculating oil lubrication.

Drip feed oil lubrication

This is suitable for bearings running at high speeds, *Figure 17*.

The oil quantity required is dependent on the type and size of bearing, the operating speed and the load.

The guide value is between 3 drops/min and 50 drops/min for each rolling element raceway (one drop weighs approx. 0,025 g).

Excess oil must be allowed to flow out of the bearing arrangement.

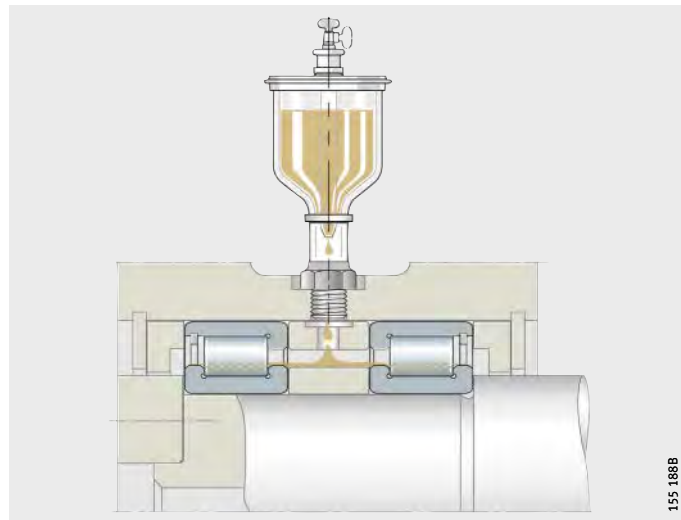

Figure 17
Drip feed oil lubrication (schematic)

Pneumatic oil lubrication

This method is particularly suitable for radial bearings running at high speeds and under low loads ($n \cdot d_M$ = 800 000 to 3 000 000 $min^{-1} \cdot mm$), *Figure 18*.

Clean compressed air free from moisture feeds oil to the bearing. This generates an excess pressure. This prevents contaminants from entering the bearing.

With a pneumatic oil lubrication system designed for minimal quantity lubrication, low frictional torque and a low operating temperature can be achieved.

Parameters for design of the lubrication system should be requested from the equipment manufacturers.

Pneumatic oil lubrication of axial bearings should be avoided if possible.

The oil quantity required for adequate supply is dependent on the bearing type.

Pneumatic oil lubrication has little cooling effect.

Follow the instructions provided by the manufacturers of the lubrication systems.

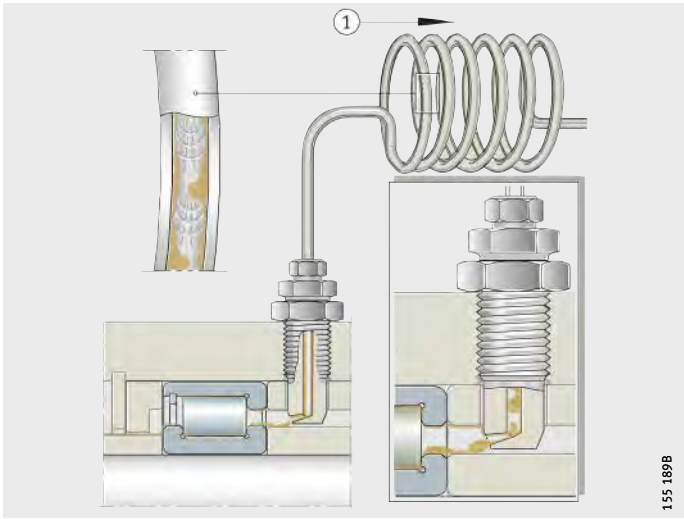

① To the pneumatic oil unit

Figure 18
Pneumatic oil lubrication (schematic)

Oil bath lubrication

The oil level should reach the centre line of the lowest rolling element, *Figure 19*. If the oil level is higher than this, the bearing temperature may increase at high circumferential speeds as a result of losses due to splashing. Furthermore, foaming of the oil may occur.

In general, it is suitable for speeds up to
$n \cdot d_M = 300\,000\ min^{-1} \cdot mm$.
At $n \cdot d_M < 150\,000\ min^{-1} \cdot mm$, the bearing may be completely immersed.

In bearings with an asymmetrical cross-section, oil return ducts must be provided due to the pumping effect so that recirculation can be achieved.

In axial bearings, the oil level must cover the inside diameter of the axial cage.

The oil quantity in the housing must be adequately proportioned, otherwise very short oil change intervals will be necessary.

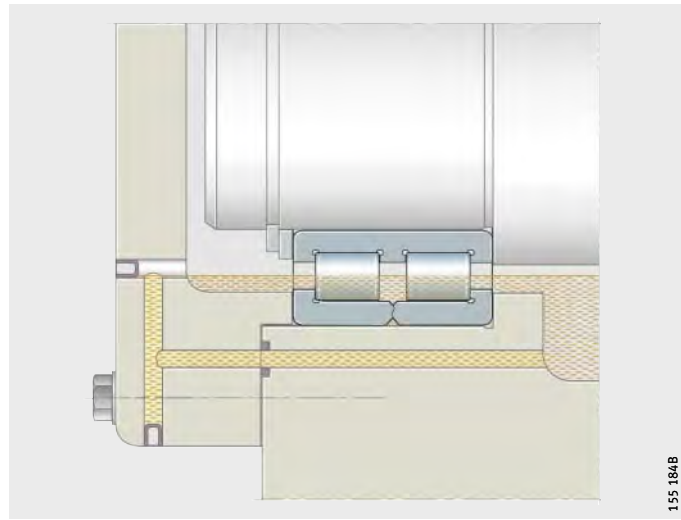

Figure 19
Oil bath lubrication (schematic)

Recirculating oil lubrication

In recirculating oil lubrication, the oil is subjected to additional cooling, *Figure 20*. The oil can therefore dissipate heat from the bearing. The quantity of oil required for heat dissipation is dependent on the cooling conditions, see section Speeds, page 60.

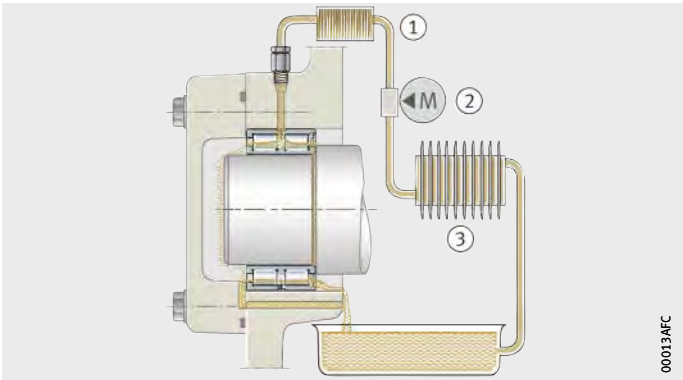

① Filter
② Pump
③ Cooling system

Figure 20
Recirculating oil lubrication (schematic)

The oil quantities $\dot{V}$ are matched to the operating conditions, *Figure 21*. The diagram indicates oil quantities that can be fed through the bearing without pressure with a side feed arrangement and banking up to the lower edge of the shaft.

For bearings with an asymmetrical cross-section (such as angular contact ball bearings, tapered roller bearings, axial spherical roller bearings), larger throughput quantities are permissible due to the pumping effect than for bearings with a symmetrical cross-section. Large quantities can be used to dissipate wear debris or heat.

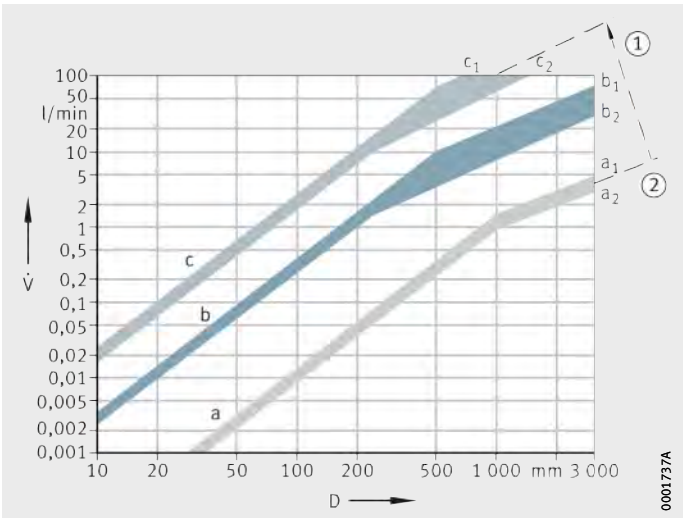

$\dot{V}$ = oil quantity
D = outside bearing diameter
① Increasing oil quantity required for heat dissipation
② No heat dissipation necessary
a = oil quantity sufficient for lubrication
b = upper limit for bearings of symmetrical design
c = upper limit for bearings of asymmetrical design
a_1; b_1; c_1: $D/d > 1,5$
a_2; b_2; c_2: $D/d \leqq 1,5$

Figure 21
Oil quantities

Design of adjacent construction for oil lubrication

The lubrication holes in the housing and shaft must align with those in the rolling bearings. Adequate cross-sections must be provided for annular slots, pockets, etc.

The oil must be able to flow out without pressure (this prevents oil build-up and additional heating of the oil).

In axial bearings, the oil must always be fed from the inside to the outside.

Outlet cross-section guide values for oil lubrication

The cross-section of the oil outlet hole should be significantly larger than that of the inlet, *Figure 22*.

The cross-section A_{rab} is dependent on the oil quantity and the viscosity:

$$A_{rab} = K_{ab} \cdot A_{ab}$$

A_{rab} mm^2
Outlet cross-section taking viscosity into consideration

K_{ab} –
Correction factor for viscosity, see table

A_{ab} mm^2
Outlet cross-section, *Figure 22*.

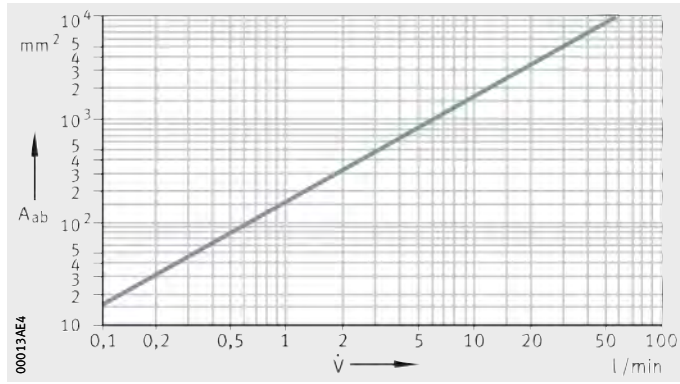

A_{ab} = cross-section for pressure-free oil runout
$\dot{V}$ = oil quantity

Figure 22
Outlet cross-section (guide values)

Correction factor K_{ab}

Viscosity $mm^2 \cdot s^{-1}$	Factor K_{ab}
up to 30	1
30 to 60	1,2 to 1,6
60 to 90	1,8 to 2,2
90 to 120	2,4 to 2,8
120 to 150	3 to 3,4

Oil injection lubrication

In bearings running at high speeds, the oil is injected into the gap between the cage and bearing ring, *Figure 23*.
Injection lubrication using large recirculation quantities is associated with high power loss.

Heating of the bearings can only be held within limits with a considerable amount of effort. The appropriate upper limit for the speed parameter $n \cdot d_M = 1\,000\,000\ min^{-1} \cdot mm$ for recirculating lubrication with suitable bearings (for example spindle bearings) can be exceeded to a considerable degree when using injection lubrication.

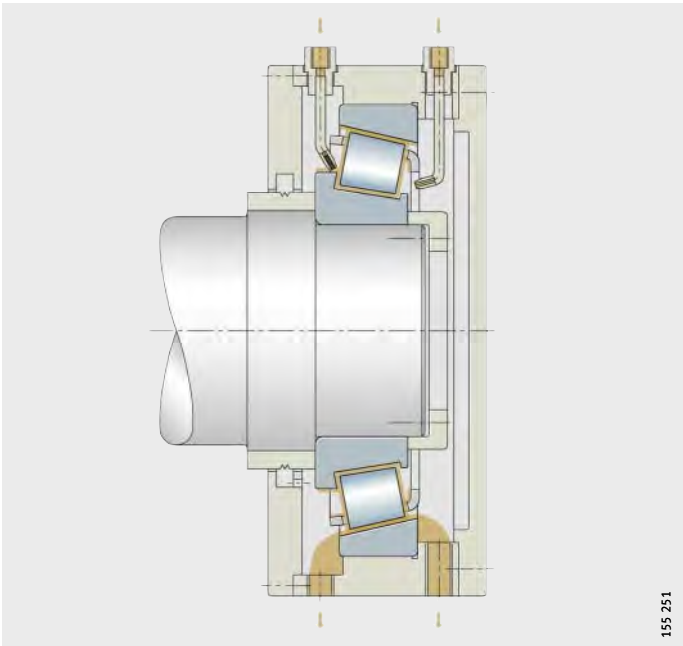

Figure 23
Oil injection lubrication
(oil feed from both sides
for tapered roller bearing running
at high speeds)

Heat dissipation by the lubricant

Oil can dissipate frictional heat from the bearing. It is possible to calculate the heat flow $\dot{Q}_L$ that is dissipated with the lubricant and the necessary lubricant volume flow $\dot{V}_L$.

Heat flow

$$\dot{Q} = 10^{-6} \cdot \frac{\pi}{30} \cdot n \cdot (M_0 + M_1) + \dot{Q}_E$$

$$\dot{Q}_L = \dot{Q} - \dot{Q}_S$$

Approximate calculation

$$\dot{V}_L = \frac{\dot{Q}_L}{0{,}0286 \cdot \Delta\vartheta_L}$$

$\dot{Q}_L$ kW
Heat flow dissipated by the lubricant
$\dot{Q}$ kW
Total dissipated heat flow
$\dot{Q}_S$ kW
Heat flow dissipated via the bearing seating surfaces
$\dot{Q}_E$ kW
Heat flow due to heating by external source
n min^{-1}
Operating speed or equivalent speed
M_0 Nmm
Frictional torque as a function of speed
M_1 Nmm
Frictional torque as a function of load
$\dot{V}_L$ l/min
Lubricant volume flow
$\Delta\vartheta_L$ K
Difference between oil inlet and oil outlet temperature.

Guide values for the oil quantity in cooling and lubrication

If these values cannot be calculated, the guide values according to *Figure 24* apply for the temperature difference of $\Delta\vartheta_L$ = 10 K.

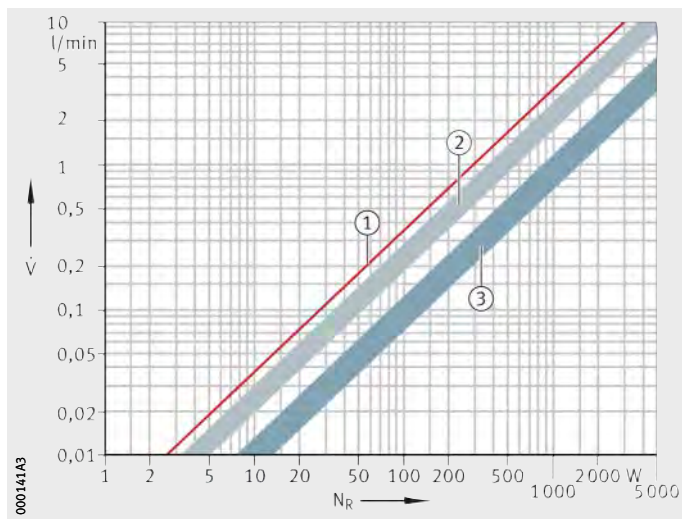

$\dot{V}$ = oil quantity
N_R = frictional power
① No account is taken of thermal conduction, radiation or convection
② Empirical values for normal cooling conditions
③ Empirical values for very good cooling conditions

Figure 24
Guide values for the oil quantity in cooling and lubrication

Oil changes

At temperatures in the bearing of less than +50 °C and with only slight contamination, an oil change once per year is generally sufficient.

Guide values for the oil change intervals are given in *Figure 25*.

The precise oil change intervals should be agreed in consultation with the oil manufacturer.

Severe operating conditions

Under severe conditions, the oil should be changed more often. This applies, for example, in the case of higher temperatures and low oil quantities with a high circulation index.

The circulation index indicates how often the entire oil volume available is recirculated and pumped per hour:

$$\text{Circulation index} = \frac{\text{Pump displacement m}^3/\text{h}}{\text{Container volume m}^3}$$

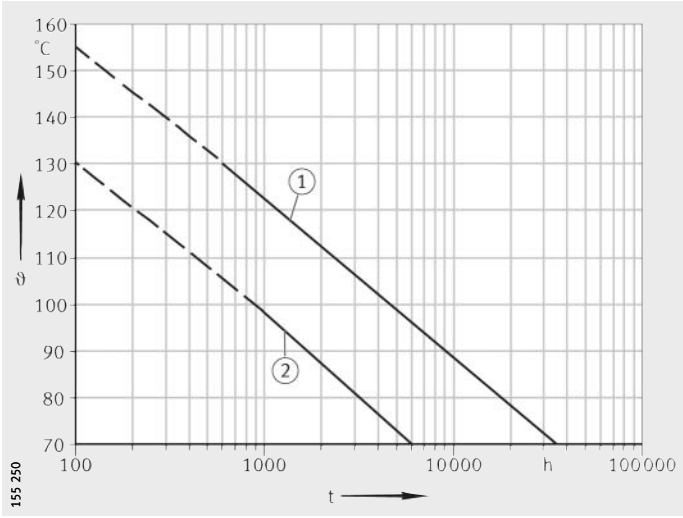

ϑ = oil sump temperature
t = oil change interval
① Synthetic gearbox oils
② Mineral gearbox oils
Source: FVA Project No. 171

Figure 25
Oil change intervals

Radial internal clearance

The radial internal clearance applies to bearings with an inner ring before the bearing is mounted. It is defined as the amount by which the inner ring can be moved in a radial direction from one extreme position to the other in relation to the outer ring, *Figure 1*.

In accordance with DIN 620-4, ISO 5 753, the radial internal clearance is divided into groups, *Figure 1* and table.

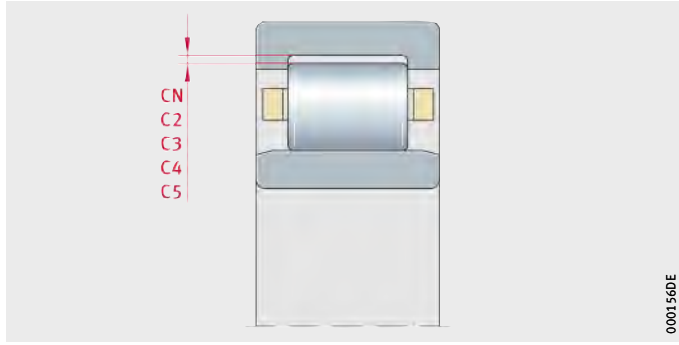

CN, C2, C3, C4, C5 = internal clearance groups

Figure 1
Radial internal clearance

Radial internal clearance groups

Internal clearance group	Description	Standard	Application
CN	■ Normal radial internal clearance ■ CN is not included in bearing designations	DIN 620-4 ISO 5 753	For normal operating conditions with shaft and housing tolerances, see section Operating clearance value, page 97
C2	■ Internal clearance < CN		For heavy alternating loads combined with oscillating motion
C3	■ Internal clearance > CN		For bearing rings with press fits and large temperature differential between the inner and outer ring
C4	■ Internal clearance > C3		
C5	■ Internal clearance > C4	ISO 5 753	

Enveloping circle

For bearings without an inner ring, the enveloping circle F_w is used. This is the inner inscribed circle of the cylindrical rollers in clearance-free contact with the outer raceway, *Figure 2*. Before the bearings are mounted, it is in the tolerance zone F6. Deviations for F6, see table, page 146.

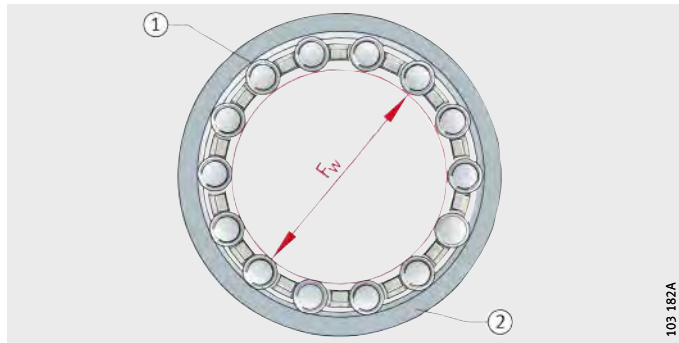

① Cylindrical roller
② Outer raceway
F_w = enveloping circle diameter

Figure 2
Enveloping circle

Operating clearance

The operating clearance is determined on a mounted bearing still warm from operation. It is defined as the amount by which the shaft can be moved in a radial direction from one extreme position to the other, *Figure 3*.

The operating clearance is derived from the radial internal clearance and the change in the radial internal clearance as a result of interference fit and thermal influences in the mounted condition.

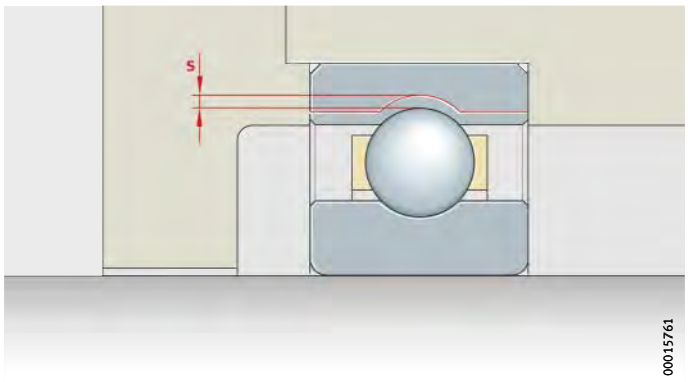

s = operating clearance

Figure 3
Operating clearance

Operating clearance value

The operating clearance value is dependent on the operating and installation conditions of the bearing, see also section Design of bearing arrangements, page 120.

A larger operating clearance is, for example, necessary if heat is transferred via the shaft, the shaft undergoes deflection or if misalignment occurs.

An operating clearance smaller than CN should only be used in special cases, for example in high precision bearing arrangements.

The normal operating clearance is achieved with internal clearance CN or, in larger bearings, predominantly with C3 if the recommended shaft and housing tolerances are fulfilled, see section Design of bearing arrangements, page 120.

Calculation of operating clearance

The operating clearance is derived from:

$$s = s_r - \Delta s_P - \Delta s_T$$

s µm
Radial operating clearance of mounted bearing warm from operation

s_r µm
Radial internal clearance

Δs_P µm
Reduction in radial internal clearance due to fit

Δs_T µm
Reduction in radial internal clearance due to temperature.

Reduction in radial internal clearance due to fit

The radial internal clearance is reduced due to the fit as a result of expansion of the inner ring and contraction of the outer ring:

$$\Delta s_P = \Delta d + \Delta D$$

Δd µm
Expansion of the inner ring
ΔD µm
Contraction of the outer ring.

Expansion of the inner ring

The expansion of the inner ring is calculated as follows:

$$\Delta d \approx 0{,}9 \cdot U \cdot d/F \approx 0{,}8 \cdot U$$

d mm
Bore diameter of the inner ring
U µm
Theoretical interference of the mounted parts with firm seating. The theoretical oversize of the mounted parts with a firm seating is determined from the mean deviations and the upper and lower deviations of the tolerance zones of the mounted parts reduced by $^1/_3$ of their acceptable value. This must be reduced by the amount by which parts are smoothed during mounting
F mm
Raceway diameter of the inner ring.



For very thin-walled housings and light metal housings, the reduction in the radial internal clearance must be determined by mounting trials.

Contraction of the outer ring

The contraction of the outer ring is calculated as follows:

$$\Delta D \approx 0{,}8 \cdot U \cdot E/D \approx 0{,}7 \cdot U$$

E mm
Raceway diameter of the outer ring
D mm
Outside diameter of the outer ring.

Reduction in radial internal clearance due to temperature

The radial internal clearance can alter considerably if there is a substantial temperature difference between the inner ring and outer ring.

$$\Delta s_T = \alpha \cdot d_M \cdot 1000 \cdot (\vartheta_{IR} - \vartheta_{AR})$$

Δs_T µm
Reduction in radial internal clearance due to temperature
α K^{-1}
Coefficient of thermal expansion of steel: $\alpha = 0{,}000011\ K^{-1}$
d_M mm
Mean bearing diameter (d + D)/2
ϑ_{IR} °C, K
Temperature of the inner ring
ϑ_{AR} °C, K
Temperature of the outer ring
(usual temperature difference between inner and outer ring: 5 K to 10 K).

Where shafts start up quickly, a larger radial internal clearance should be used since adequate thermal compensation between the bearing, shaft and housing does not occur in this situation.

Δs_T can, in this case, be significantly higher in this case than for continuous operation.

Axial internal clearance

The axial internal clearance s_a is the extent to which one bearing ring can be displaced in relation to the other, without load, along the bearing axis, *Figure 4*.

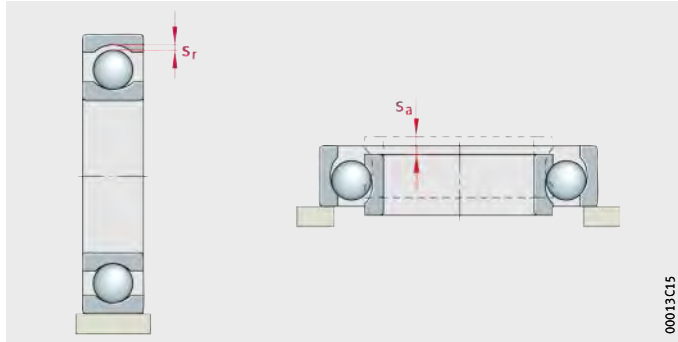

s_a = axial internal clearance
s_r = radiale internal clearance

Figure 4
Axial internal clearance in comparison with radial internal clearance

In various bearing types, there is a relationship between the radial internal clearance s_r and the axial internal clearance s_a.
Guide values for the correlation between the radial and axial internal clearance are shown for some bearing types in the table.

Correlation between axial internal clearance and radial internal clearance

Bearing type			Ratio of axial internal clearance to radial internal clearance $\frac{s_a}{s_r}$
Spherical roller bearings			$2{,}3 \cdot Y_0$ [1]
Tapered roller bearings	Single row, arranged in pairs		$4{,}6 \cdot Y_0$ [1]
	Matched pairs (N11CA)		$2{,}3 \cdot Y_0$ [1]
Angular contact ball bearings	Double row, contact angle 40°		2
	Single row	Series 72..-B and 73..-B, arranged in pairs	1,2
Four point contact bearings			1,4

[1] $\overline{Y_0}$ factor, see dimension tables.

Bearing materials

INA and FAG rolling bearings fulfil the requirements for fatigue strength, wear resistance, hardness, toughness and structural stability.

The material used for the rings and rolling elements is generally a low alloy, through hardening chromium steel of high purity. For bearings subjected to considerable shock loads and reversed bending stresses, case hardening steel is also used (supplied by agreement).

In recent years, the improved quality of rolling bearing steels has been the principal factor in achieving considerable increases in basic load ratings.

The results of research as well as practical experience confirm that bearings made from the steel currently used as standard can achieve their endurance limit if loads are not excessively high and the lubrication and cleanliness conditions are favourable.

High Nitrogen Steel

Special bearings made from HNS (High Nitrogen Steel, supplied by agreement) can achieve adequate life values even under the most challenging conditions (high temperatures, moisture, contamination).

High performance steels Cronidur and Cronitect®

For increased performance requirements, highly corrosion-resistant, nitrogen-alloyed martensitic HNS steels are available such as Cronidur and the newly developed steel Cronitect®.

In contrast to Cronidur, the more economical alternative Cronitect® has nitrogen introduced into the structure by means of a surface layer hardening process.

Both steels are considerably superior in terms of corrosion and wear resistance as well as fatigue strength to the conventional corrosion-resistant steels for rolling bearings, see also TPI 64, Corrosion-resistant Products.

Ceramic materials

Ceramic hybrid spindle bearings contain balls made from silicon nitride. These ceramic balls are substantially lighter than steel balls. The centrifugal forces and friction are significantly lower.

Hybrid bearings allow very high speeds, even with grease lubrication, as well as long operating life and low operating temperatures.

Materials and bearing components

The following table shows suitable materials and their application in bearing technology.

Materials and bearing components

Material	Bearing components (example)
Through hardening chromium steel – rolling bearing steel to ISO 683-17	Outer and inner ring, axial washer
HNS – High Nitrogen Steel	Outer and inner ring
Corrosion-resistant steel – rolling bearing steel to ISO 683-17	Outer and inner ring
Case hardening steel	For example, outer ring of back-up rollers
Silicon nitride	Ceramic balls
Brass alloy	Cage
Aluminium alloy	Cage
NBR, FPM, PUR	Sealing ring

Cages

The most important functions of the cage are:

- to separate the rolling elements from each other in order to minimise friction and heat generation
- to maintain the rolling elements at the same distance from each other in order to ensure uniform load distribution
- to prevent the rolling elements from falling out in bearings that can be dismounted or swivelled out
- to guide the rolling elements in the unloaded zone of the bearing.

Rolling bearing cages are subdivided into sheet metal and solid section cages.

Sheet metal cages

These cages are predominantly made from steel and for some bearings from brass, *Figure 5*, page 103. In comparison with solid section cages made from metal, they are of lower mass.

Since a sheet metal cage only fills a small proportion of the gap between the inner and outer ring, lubricant can easily reach the interior of the bearing and is held on the cage.

In general, a sheet steel cage is only included in the bearing designation if it is not defined as a standard version of the bearing.

Solid section cages

These cages are made from metal, laminated fabric or plastic, *Figure 6*. They can be identified from the bearing designation.

Solid section cages made from metal or laminated fabric

Solid section cages made from metal are used where there are requirements for high cage strength and at high temperatures.

Solid section cages are also used if the cage must be guided on ribs. Rib-guided cages for bearings running at high speeds are made in many cases from light materials such as light metal or laminated fabric in order to achieve low inertia forces.

Cage designs

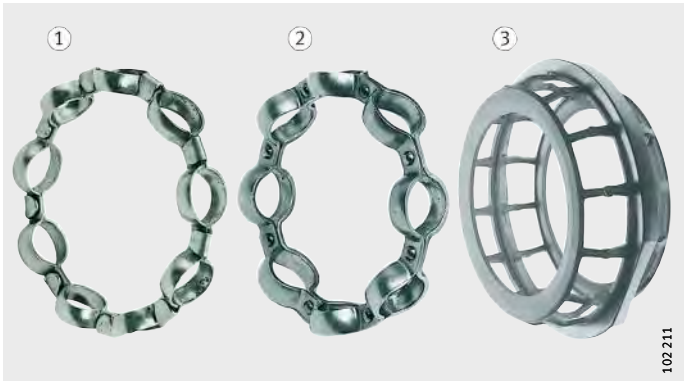

① Lug cage
for deep groove ball bearings
② Riveted cage
for deep groove ball bearings
③ Window cage
for spherical roller bearings

Figure 5
Sheet steel cages



① Riveted solid section cage
for deep groove ball bearings
② Window cage
for angular contact ball bearings
③ Riveted cage with
crosspiece rivets
for cylindrical roller cages

Figure 6
Solid section brass cages

Guidance method

A further means of distinguishing between cages is their guidance method, *Figure 7*. Most cages are guided by the rolling elements and do not have a suffix for the guidance method.

If guidance is by the bearing outer ring, the suffix A is used. Cages that are guided on the inner ring have the suffix B.

Under normal operating conditions, the cage design defined as the standard cage is generally suitable. Standard cages that may differ within a bearing series according to the bearing size are described in the product sections.

Under special operating conditions, a cage that is suitable for the specific conditions must be selected.

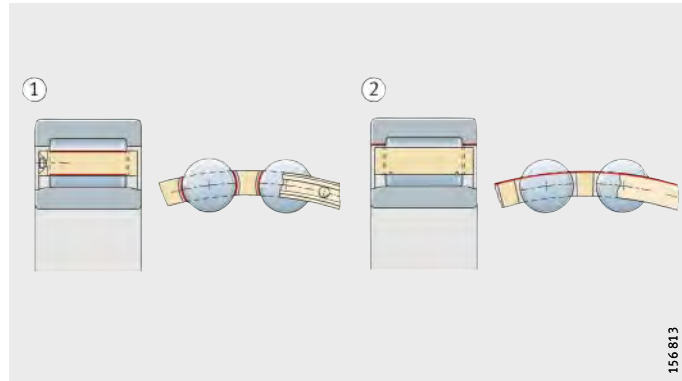

Rolling bearing cages:
① Guided by rolling elements
② Guided by ribs

Figure 7
Guidance of cages

Operating temperature

Rolling bearings are thermally stabilised such that, depending on the bearing type, they are generally dimensionally stable up to +120 °C (certain series up to +150 °C).

Operating temperatures above +150 °C require special heat treatment. Bearings treated in this way are available by agreement and are identified by the suffixes S1, S2, S3 and S4 to DIN 623-1, see table.

The temperature data in the product descriptions must be observed.

Suffixes for bearings for high temperatures

Suffix	S1	S2	S3	S4
Max. operating temperature	+200 °C	+250 °C	+300 °C	+350 °C

Sealed bearings

The permissible temperature for sealed bearings is dependent on the requirements for the operating life of the grease filling and on the action of the contact seals.

Sealed bearings are greased with specially tested, high performance, high quality greases. These greases can withstand +120 °C for short periods. At long term temperatures of +70 °C and above, a reduction in the operating life of standard greases with a lithium soap base must be expected.

In many cases, adequate operating life values are only achieved at high temperatures through the use of special greases.
In these cases, it must also be checked whether seals made from especially heat-resistant materials must be used.
The operating limit of normal contact seals is +100 °C.

If high temperature synthetic materials are used for seals and greases, it must be noted that the particularly high performance materials containing fluoride may give off harmful gases and vapours when heated to approx. +300 °C and above. This may occur, for example, if a welding torch is used in the dismounting of a bearing.

High temperatures are critical especially in the case of seals made from fluoro elastomer (FKM, FPM, for example Viton) or fluoride-containing greases such as the rolling bearing greases Arcanol TEMP200 and greases to GA11. If high temperatures are unavoidable, attention must be paid to the valid safety data sheet for the specific fluoride-containing material, which can be obtained upon request.

Anti-corrosion protection

Bearings are not resistant to corrosion by water or agents containing alkalis or acids but are often exposed to these corrosion-inducing agents. In such applications, anti-corrosion protection is therefore a decisive factor in achieving a long operating life of the bearings.

In principle, corrosion-resistant steels to ISO 693-17 can be used. These bearings have the prefix S. For higher requirements, it may be advisable to use the high performance steels Cronidur and Cronitect®, see page 101.

Corrotect® coating

In many applications, the special coating Corrotect® is more cost-effective than corrosion-resistant steel.

Corrotect® is an extremely thin, electroplated surface coating (coating thickness 0,5 µm to 3 µm). The coating is effective against moisture, contaminated water, salt spray and weakly alkaline and weakly acidic cleaning agents.

Advantages of the coating

The advantages of the special coating Corrotect® are all-round rust protection, including the turned surfaces of chamfers and radii, *Figure 8*. It also gives long term prevention of rust penetration beneath seals and smaller bright spots are protected against rust by the cathodic protection effect. In comparison with uncoated parts, operating life is significantly increased by the anti-corrosion protection. Uncoated bearings can be easily replaced by coated bearings of the same dimensions and there is no decrease in load carrying capacity (such as occurs in the use of corrosion-resistant steels). During storage, there is no need to use organic-based preservatives.



① With Corrotect® coating
② Uncoated

Figure 8
Bearing rings after the salt spray test

Mounting of coated bearings

Before bearings with Corrotect® coating are mounted, compatibility with the media should always be checked.

For lower press-in forces, the surface of the parts should be lightly greased; the tolerances are increased by the thickness of the coating.

Dimensional and geometrical tolerances

Unless stated otherwise, the tolerances for radial rolling bearings correspond to DIN 620-2 (ISO 492), while the tolerances for axial rolling bearings correspond to DIN 620-3 (ISO 199), *Figure 9*.

The accuracy corresponds to tolerance class PN. For bearings with increased accuracy, the tolerances are restricted to the values of classes P6, P5, P4 and P2. Tolerance tables for the individual tolerance classes, see page 109 to page 115.

High precision bearings

In addition to the standardised tolerance classes, high precision bearings are also produced in the tolerance classes P4S, SP and UP. These tolerances are listed in the product descriptions for the high precision bearings.

Measurement methods

Measurement methods according to DIN 620-1 (ISO 1 132-2) are valid for the acceptance inspection of rolling bearings.

Further information on the measurement methods is given in TPI 138, Rolling Bearing Tolerances, Definitions and Measurement Principles. This TPI can be ordered via the Internet.

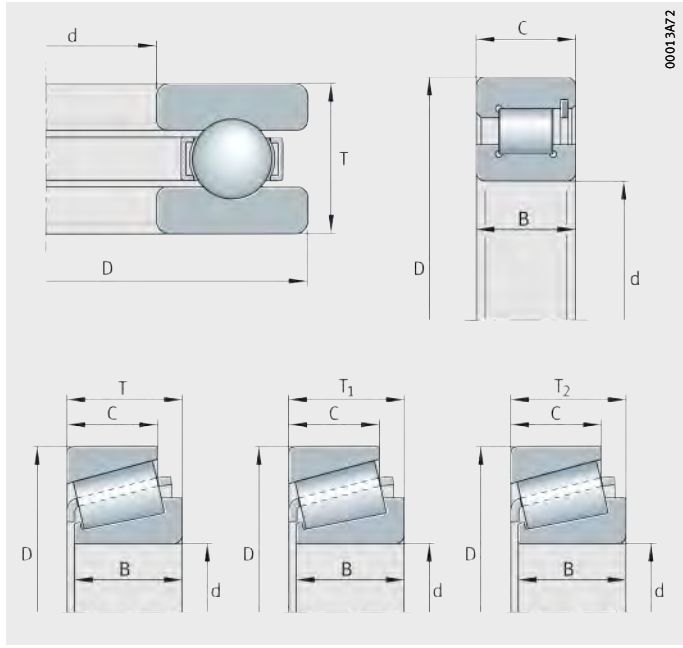

Figure 9
Main dimensions to DIN 620

Dimensional and tolerance symbols

Dimensional and tolerance symbols	Toleranced characteristic to DIN 1 132 and DIN 620
d	Nominal bore diameter
Δ_{dmp}	Deviation of mean bore diameter in a single plane
Δ_{d1mp}	Deviation of mean large end diameter in tapered bores
V_{dsp}	Variation of single bore diameter in a single plane
V_{dmp}	Variation of mean bore diameter
D	Nominal outside diameter
Δ_{Dmp}	Deviation of mean outside diameter in a single plane
V_{Dsp}	Variation of single outside diameter in a single plane
V_{Dmp}	Variation of mean outside diameter
B	Nominal inner ring width
Δ_{Bs}	Deviation of a single inner ring width
V_{Bs}	Variation of inner ring width
C	Nominal outer ring width
Δ_{Cs}	Deviation of a single outer ring width
V_{Cs}	Variation of outer ring width
K_{ia}	Radial runout of inner ring of assembled bearing
K_{ea}	Radial runout of outer ring of assembled bearing
S_d	Axial runout of inner ring face to the bore
S_D	Runout of outer ring outside surface generatrix to the face
S_{ia}	Axial runout of inner ring of assembled bearing
S_{ea}	Axial runout of outer ring of assembled bearing
S_i	Variation of washer thickness of shaft locating washer
S_e	Variation of washer thickness of housing locating washer
T	Nominal bearing height of a single direction axial bearing
T	Total width of tapered roller bearing
T_{1s}	Total width of tapered roller bearing over inner ring and normal outer ring measured at one point
T_{2s}	Total width of tapered roller bearing over outer ring and normal inner ring measured at one point
Δ_{Ts}, Δ_{T1s}, Δ_{T2s}	Deviation in total width from nominal dimension of tapered roller bearing measured at one point

Radial bearings, excluding tapered roller bearings

Tolerance class PN
Inner ring
Tolerances in μm

d		Δ_{dmp}		V_{dsp} Diameter series			V_{dmp}	K_{ia}
mm		Deviation		9	0, 1	2, 3, 4		
over	incl.	upper	lower	max.	max.	max.	max.	max.
120	180	0	−25	31	31	19	19	30
180	250	0	−30	38	38	23	23	40
250	315	0	−35	44	44	26	26	50
315	400	0	−40	50	50	30	30	60
400	500	0	−45	56	56	34	34	65
500	630	0	−50	63	63	38	38	70
630	800	0	−75	–	–	–	–	80
800	1 000	0	−100	–	–	–	–	90
1 000	1 250	0	−125	–	–	–	–	100
1 250	1 600	0	−160	–	–	–	–	120
1 600	2 000	0	−200	–	–	–	–	140

Tolerance class PN
Inner ring
continued
Tolerances in μm

d		Δ_{Bs}				V_{Bs}
mm		Normal deviation		Modified deviation[1)]		
over	incl.	upper	lower	upper	lower	max.
120	180	0	−250	0	−500	30
180	250	0	−300	0	−500	30
250	315	0	−350	0	−500	35
315	400	0	−400	0	−630	40
400	500	0	−450	0	–	50
500	630	0	−500	0	–	60
630	800	0	−750	0	–	70
800	1 000	0	−1 000	0	–	80
1 000	1 250	0	−1 250	0	–	100
1 250	1 600	0	−1 600	0	–	120
1 600	2 000	0	−2 000	0	–	140

[1)] Only for bearings manufactured specifically for use as matched pairs.

Tolerance class PN
Outer ring[1]
Tolerances in μm

D		Δ_{Dmp}		V_{Dsp}				V_{Dmp}[2]	K_{ea}
				Open bearings Diameter series			Bearings with sealing shields and sealing washers		
mm		Deviation		9	0, 1	2, 3, 4			
over	incl.	upper	lower	max.	max.	max.	max.	max.	max.
315	400	0	−40	50	50	30	–	30	70
400	500	0	−45	56	56	34	–	34	80
500	630	0	−50	63	63	38	–	38	100
630	800	0	−75	94	94	55	–	55	120
800	1 000	0	−100	125	125	75	–	75	140
1 000	1 250	0	−125	–	–	–	–	–	160
1 250	1 600	0	−160	–	–	–	–	–	190
1 600	2 000	0	−200	–	–	–	–	–	220
2 000	2 500	0	−250	–	–	–	–	–	250

[1] $\overline{\Delta_{Cs}}$, $\overline{\Delta_{C1s}}$, $\overline{V_{Cs}}$ and $\overline{V_{C2s}}$ are identical to Δ_{Bs} and V_{Bs} for the inner ring of the corresponding bearing (table Tolerance class PN Inner ring, page 109).

[2] Applies before assembly of the bearing and after removal of internal and/or external snap rings.

Radial bearings, excluding tapered roller bearings

Tolerance class P6 Inner ring Tolerances in μm

d mm		Δ_{dmp} Deviation		V_{dsp} Diameter series 9	0, 1	2, 3, 4	V_{dmp}	K_{ia}
over	incl.	upper	lower	max.	max.	max.	max.	max.
120	180	0	−18	23	23	14	14	18
180	250	0	−22	28	28	17	17	20
250	315	0	−25	31	31	19	19	25
315	400	0	−30	38	38	23	23	30
400	500	0	−35	44	44	26	26	35
500	630	0	−40	50	50	30	30	40

Tolerance class P6 Inner ring continued Tolerances in μm

d mm		Δ_{Bs} Normal deviation		Modified deviation[1]		V_{Bs}
over	incl.	upper	lower	upper	lower	max.
120	180	0	−250	0	−550	30
180	250	0	−300	0	−500	30
250	315	0	−350	0	−500	35
315	400	0	−400	0	−630	40
400	500	0	−450	–	–	45
500	630	0	−500	–	–	50

[1] Only for bearings manufactured specifically for use as matched pairs.

Tolerance class P6 Outer ring[1] Tolerances in μm

D mm		Δ_{Dmp} Deviation		V_{Dsp} Open bearings Diameter series 9	0, 1	2, 3, 4	Bearings with sealing shields and sealing washers	V_{Dmp}[2]	K_{ea}
over	incl.	upper	lower	max.	max.	max.	max.	max.	max.
315	400	0	−28	35	35	21	–	21	35
400	500	0	−33	41	41	25	–	25	40
500	630	0	−38	48	48	29	–	29	50
630	800	0	−45	56	56	34	–	34	60
800	1 000	0	−60	75	75	45	–	45	75

[1] Δ_{Cs}, Δ_{C1s}, V_{Cs} and V_{C2s} are identical to Δ_{Bs} and V_{Bs} for the inner ring of the corresponding bearing (table Tolerance class P6 Inner ring).

[2] Applies before assembly of the bearing and after removal of internal and/or external snap rings.

Radial bearings, excluding tapered roller bearings

Tolerance class P5 Inner ring Tolerances in μm

d		Δ_{dmp}		V_{dsp} Diameter series		V_{dmp}	K_{ia}	S_d
mm		Deviation		9	0, 1, 2, 3, 4			
over	incl.	upper	lower	max.	max.	max.	max.	max.
120	180	0	−13	13	10	7	8	10
180	250	0	−15	15	12	8	10	11
250	315	0	−18	18	14	9	13	13
315	400	0	−23	23	18	12	15	15

Tolerance class P5 Inner ring continued Tolerances in μm

d		S_{ia} [1]	Δ_{Bs}				V_{Bs}
mm			Normal deviation		Modified deviation [2]		
over	incl.	max.	upper	lower	upper	lower	max.
120	180	10	0	−250	0	−380	8
180	250	13	0	−300	0	−500	10
250	315	15	0	−350	0	−500	13
315	400	20	0	−400	0	−630	15

1) Only for deep groove and angular contact ball bearings.

2) Only for bearings manufactured specifically for use as matched pairs.

Tolerance class P5 Outer ring [1] Tolerances in μm

D		Δ_{Dmp}		V_{Dsp} [2] Diameter series		V_{Dmp} [3]	K_{ea}	S_D	S_{ea} [4]	V_{Cs}
mm		Deviation		9	0, 1, 2, 3, 4					
over	incl.	upper	lower	max.	max.	max.	max.	max.	max.	max.
315	400	0	−20	20	15	10	20	13	–	13
400	500	0	−23	23	17	12	23	15	–	15
500	630	0	−28	28	21	14	25	18	–	18
630	800	0	−35	35	26	18	30	20	–	20

1) Δ_{Cs} is identical to Δ_{Bs} for the inner ring of the corresponding bearing (table Tolerance class P5 Inner ring).

2) No values are defined for radial ball bearings with sealing shields or sealing washers.

3) Applies before assembly of the bearing and after removal of internal and/or external snap rings.

4) Only for deep groove and angular contact ball bearings.

Tolerances for tapered bores, taper 1:12 Tolerances in μm

Bore diameter d mm		Tolerance class PN				
		Δ_{dmp} Deviation μm		V_{dp} [1]	$\Delta_{d1\,mp} - \Delta_{dmp}$ Deviation μm	
over	incl.	upper	lower	max.	upper	lower
120	180	+40	0	31	+40	0
180	250	+46	0	38	+46	0
250	315	+52	0	44	+52	0
315	400	+57	0	50	+57	0
400	500	+63	0	56	+63	0
500	630	+70	0	–	+70	0
630	800	+80	0	–	+80	0
800	1000	+90	0	–	+90	0
1000	1250	+105	0	–	+105	0
1250	1600	+125	0	–	+125	0
1600	2000	+150	0	–	+150	0

[1] Valid in any radial cross-section of the bore.

Tolerances for tapered bores, taper 1:30 Tolerances in μm

Bore diameter d mm		Tolerance class PN				
		Δ_{dmp} Deviation μm		V_{dp} [1]	$\Delta_{d1\,mp} - \Delta_{dmp}$ Deviation μm	
over	incl.	upper	lower	max.	upper	lower
120	180	+25	0	31	+50	0
180	250	+30	0	38	+55	0
250	315	+35	0	44	+60	0
315	400	+40	0	50	+65	0
400	500	+45	0	56	+75	0
500	630	+50	0	63	+85	0
630	800	+75	0	–	+100	0
800	1000	+100	0	–	+100	0
1000	1250	+125	0	–	+115	0
1250	1600	+160	0	–	+125	0
1600	2000	+200	0	–	+150	0

[1] Valid in any radial cross-section of the bore.

Taper 1:12
Half of taper angle $\alpha = 2°23' 9{,}4''$;
theoretical large end diameter

$$d_1 = d + \frac{1}{12} \times B$$

Taper 1:30
Half of taper angle $\alpha = 0°57' 17{,}4''$;
theoretical large end diameter

$$d_1 = d + \frac{1}{30} \times B$$

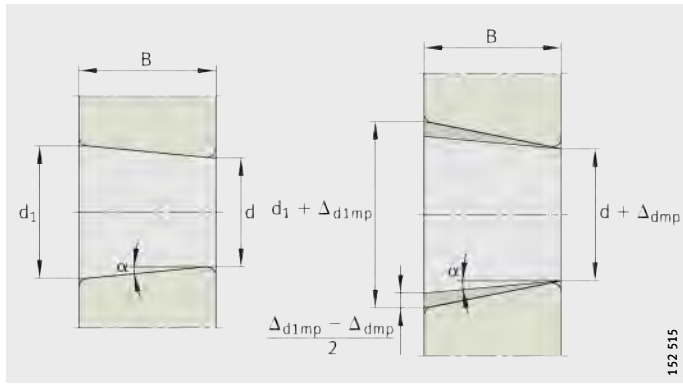

Figure 10
Tolerances for tapered bores

Axial bearings

Bore diameter tolerances for shaft locating washers to ISO 199, DIN 620-3 Tolerances in μm

d		PN (normal tolerance), P6 and P5			P4		
		Δ_{dmp}		V_{dp}	Δ_{dmp}		V_{dp}
mm		Deviation			Deviation		
over	incl.	upper	lower	max.	upper	lower	max.
120	180	0	−25	19	0	−18	14
180	250	0	−30	23	0	−22	17
250	315	0	−35	26	0	−25	19
315	400	0	−40	30	0	−30	23
400	500	0	−45	34	0	−35	26
500	630	0	−50	38	0	−40	30
630	800	0	−75	56	0	−50	–
800	1 000	0	−100	75	0	–	–
1 000	1 250	0	−125	95	0	–	–

Outside diameter tolerances for housing locating washers to ISO 199, DIN 620-3 Tolerances in μm

D		PN (normal tolerance), P6 and P5			P4		
		Δ_{Dmp}		V_{Dp}	Δ_{Dmp}		V_{Dp}
mm		Deviation			Deviation		
over	incl.	upper	lower	max.	upper	lower	max.
315	400	0	−40	30	0	−28	21
400	500	0	−45	34	0	−33	25
500	630	0	−50	38	0	−38	29
630	800	0	−75	55	0	−45	34
800	1 000	0	−100	75	–	–	–
1 000	1 250	0	−125	75	–	–	–
1 250	1 600	0	−160	120	–	–	–

Variation in washer thickness for shaft and housing locating washers Tolerances in μm

d		S_i				S_e
mm		PN (normal tolerance)	P6	P5	P4	PN (normal tolerance), P6, P5, P4
over	incl.	max.	max.	max.	max.	
120	180	15	9	5	4	Identical to S_i for the shaft locating washer of the corresponding bearing
180	250	20	10	5	4	
250	315	25	13	7	5	
315	400	30	15	7	5	
400	500	30	18	9	6	
500	630	35	21	11	7	
630	800	40	25	13	8	
800	1 000	45	30	15	8	
1 000	1 250	50	35	18	9	

Tolerances for nominal bearing height

These tolerances are given in the tables.
The corresponding dimensional symbols are shown in *Figure 11*.

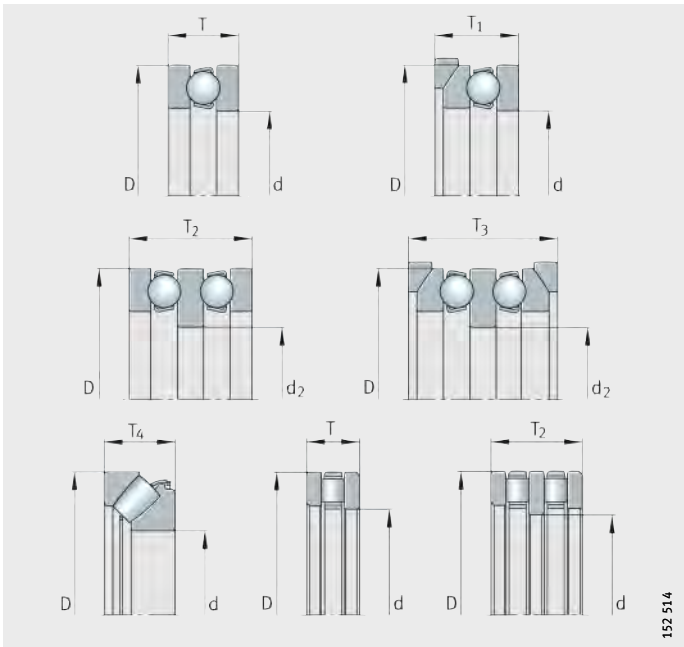

Figure 11
Tolerances for nominal bearing height

Tolerances for nominal bearing height
Tolerances in μm

d mm		T Deviation		T_1 Deviation		T_2 Deviation	
over	incl.	upper	lower	upper	lower	upper	lower
120	180	25	−400	150	−400	200	−600
180	250	30	−400	150	−400	250	−600
250	315	40	−400	200	−400	350	−700
315	400	40	−500	200	−500	350	−700
400	500	50	−500	300	−500	400	−900
500	630	60	−600	350	−600	500	−1 100
630	800	70	−750	400	−750	600	−1 300
800	1 000	80	−1 000	450	−1 000	700	−1 500
1 000	1 250	100	−1 400	500	−1 400	900	−1 800

Tolerances for nominal bearing height
continued
Tolerances in μm

d mm		T_3 Deviation		T_4 Deviation	
over	incl.	upper	lower	upper	lower
120	180	400	−600	25	−500
180	250	500	−600	30	−500
250	315	600	−700	40	−700
315	400	600	−700	40	−700
400	500	750	−900	50	−900
500	630	900	−1 100	60	−1 200
630	800	1 100	−1 300	70	−1 400
800	1 000	1 300	−1 500	80	−1 800
1 000	1 250	1 600	−1 800	100	−2 400

Chamfer dimensions

The chamfer dimensions correspond to DIN 620-6.

Radial bearings, excluding tapered roller bearings

For minimum and maximum bearing values, *Figure 12* and table Limit values for chamfer dimensions to DIN 620-6 Values in mm, page 117.

For chamfer dimensions of tapered roller bearings see page 118, for axial bearings see page 119.

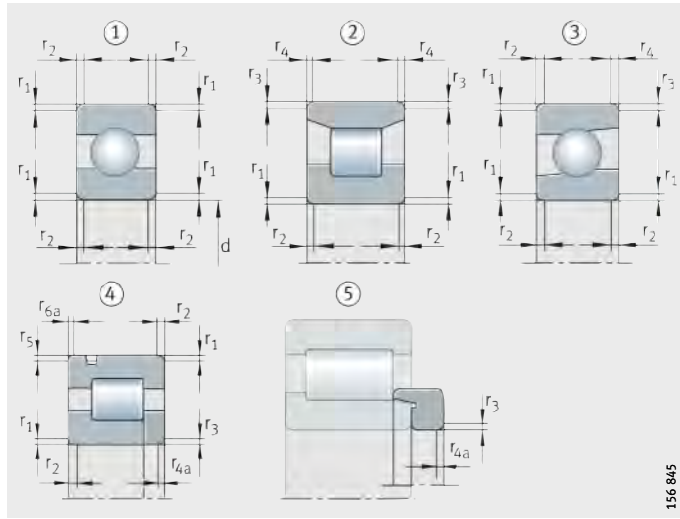

① Symmetrical ring cross-section with identical chamfers on both rings
② Symmetrical ring cross-section with different chamfers on both rings
③ Asymmetrical ring cross-section
④ Annular slot on outer ring, bearing with rib washer
⑤ L-section ring

Figure 12
Chamfer dimensions for radial bearings excluding tapered roller bearings

Limit values for chamfer dimensions to DIN 620-6 Values in mm

$r^{1)}$	d		r_1 to r_{6a}	r_1, r_3, r_5	r_2, r_4, r_6 [2)]	r_{4a}, r_{6a}
	over	incl.	min.	max.	max.	max.
1	50	–	1	1,9	3	2,2
1,1	120	–	1,1	2,5	4	2,7
1,5	120	–	1,5	3	5	3,5
2	80	220	2	3,5	5	4
	220	–	2	3,8	6	4
2,1	–	280	2,1	4	6,5	4,5
	280	–	2,1	4,5	7	4,5
2,5	100	280	2,5	4,5	6	5
	280	–	2,5	5	7	5
3	–	280	3	5	8	5,5
	280	–	3	5,5	8	5,5
4	–	–	4	6,5	9	6,5
5	–	–	5	8	10	8
6	–	–	6	10	13	10
7,5	–	–	7,5	12,5	17	12,5
9,5	–	–	9,5	15	19	15
12	–	–	12	18	24	18
15	–	–	15	21	30	21
19	–	–	19	25	38	25

1) The nominal chamfer dimension r is identical to the smallest permissible chamfer dimension r_{min}.

2) For bearings with a width of 2 mm or less, the values for r_1 apply.

Tapered roller bearings

For minumum and maximum values for metric tapered roller bearings, *Figure 13* and table.

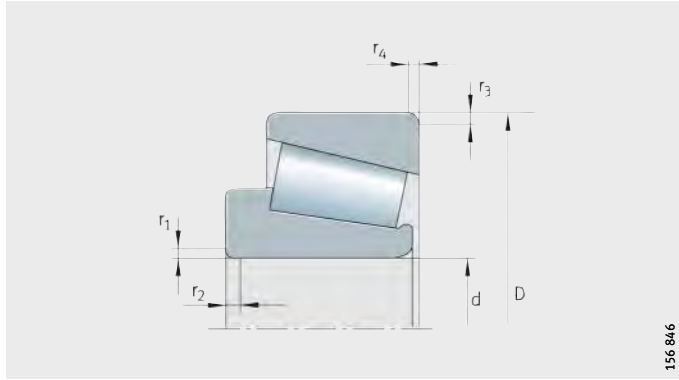

Figure 13
Chamfer dimensions
for metric tapered roller bearings

Limit values for chamfer dimensions
Values in mm

$r^{1)}$	d, D		r_1 to r_4	r_1, r_3	r_2, r_4
	over	incl.	min.	max.	max.
1	50	–	1	1,9	3
1,5	120	250	1,5	2,8	3,5
	250	–	1,5	3,5	4
2	120	250	2	3,5	4,5
	250	–	2	4	5
2,5	120	250	2,5	4	5,5
	250	–	2,5	4,5	6
3	120	250	3	4,5	6,5
	250	400	3	5	7
	400	–	3	5,5	7,5
4	120	250	4	5,5	7,5
	250	400	4	6	8
	400	–	4	6,5	8,5
5	–	180	5	6,5	8
	180	–	5	7,5	9
6	–	180	6	7,5	10
	180	–	6	9	11

1) The nominal chamfer dimension r is identical to the smallest permissible chamfer dimension r_{min}.

Axial bearings

For minimum and maximum bearing values, *Figure 14* and table. The table corresponds to DIN 620-6.

With axial ball bearings, the tolerances for the chamfer dimensions are identical in both axial and radial directions.

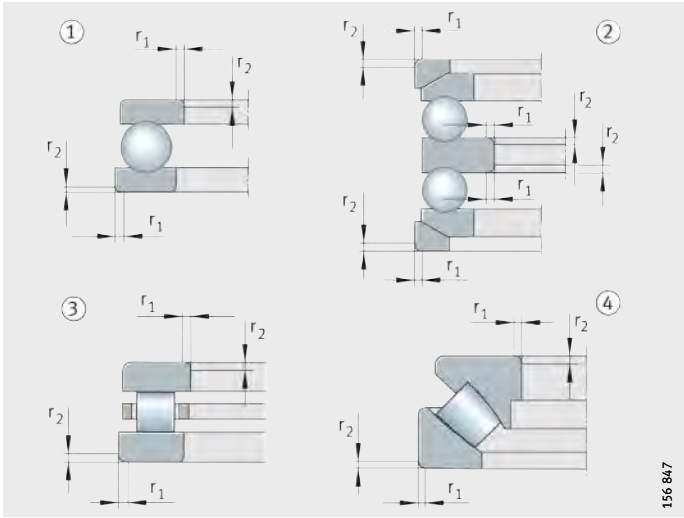

① Single direction axial deep groove ball bearing with flat housing locating washer

② Double direction axial deep groove ball bearing with spherical housing locating washers and seating washers

③ Single direction axial cylindrical roller bearing

④ Single direction axial spherical roller bearing

Figure 14
Chamfer dimensions for axial bearings

Limit values for chamfer dimensions Values in mm

$r^{1)}$	r_1, r_2	
	min.	max.
1,5	1,5	3,5
2	2	4
2,1	2,1	4,5
3	3	5,5
4	4	6,5
5	5	8
6	6	10
7,5	7,5	12,5
9,5	9,5	15
12	12	18
15	15	21
19	19	25

1) The nominal chamfer dimension r is identical to the smallest permissible chamfer dimension r_{min}.

Design of bearing arrangements

Selection of bearing arrangement

The guidance and support of a rotating shaft requires at least two bearings arranged at a certain distance from each other. Depending on the application, a decision is made between a locating/non-locating bearing arrangement, an adjusted bearing arrangement and a floating bearing arrangement.

Locating/non-locating bearing arrangement

On a shaft supported by two radial bearings, the distances between the bearing seats on the shaft and in the housing frequently do not coincide as a result of manufacturing tolerances. The distances may also change as a result of temperature increases during operation. These differences in distance are compensated in the non-locating bearing. Examples of locating/non-locating bearing arrangements, *Figure 1*, page 122 to *Figure 4*, page 123.

Non-locating bearings

Ideal non-locating bearings are cylindrical roller bearings with cage N and NU, *Figure 1* ②, page 122. In these bearings, the roller and cage assembly can be displaced on the raceway of the bearing ring without ribs.

All other bearing types, for example deep groove ball bearings and spherical roller bearings, can only act as non-locating bearings if one bearing ring has a fit that allows displacement, *Figure 2*, page 122. The bearing ring subjected to point load therefore has a loose fit; this is normally the outer ring, see section Conditions of rotation, page 128.

Locating bearings

The locating bearing guides the shaft in an axial direction and supports external axial forces. In order to prevent axial stresses, shafts with more than two bearings have only one locating bearing. The type of bearing selected as a locating bearing depends on the magnitude of the axial forces and the accuracy with which the shafts must be axially guided.

A double row angular contact ball bearing, *Figure 3* ①, page 122, for example, will give closer axial guidance than a deep groove ball bearing or a spherical roller bearing. A pair of symmetrically arranged angular contact ball bearings or tapered roller bearings, *Figure 4*, page 123, used as locating bearings will provide extremely close axial guidance.

There are particular advantages in using angular contact ball bearings of the universal design, *Figure 5*, page 123. The bearings can be mounted in pairs in any O or X arrangement without shims. Angular contact ball bearings of the universal design are matched such that, when mounted in an X or O arrangement, they have slight axial internal clearance (design UA), are clearance-free (UO) or have slight preload (UL).

Spindle bearings of the universal design UL, *Figure 6*, page 123 have slight preload when mounted in an X or O arrangement (designs with greater preload are available by agreement).

In gearboxes, a four point contact bearing is sometimes mounted directly adjacent to a cylindrical roller bearing to give a locating bearing arrangement, *Figure 3* ③, page 122. The four point contact bearing, without radial support of the outer ring, can only support axial forces. The radial force is supported by the cylindrical roller bearing.

If a lower axial force is present, a cylindrical roller bearing with cage NUP can also be used as a locating bearing, *Figure 4* ③, page 123.

No adjustment or setting work with matched pairs of tapered roller bearings

Mounting is also made easier when using matched pairs of tapered roller bearings as locating bearings (N11CA), *Figure 7* ②, page 123. They are matched with appropriate axial internal clearance such that no adjustment or setting work is required.

Examples of locating/non-locating bearing arrangements

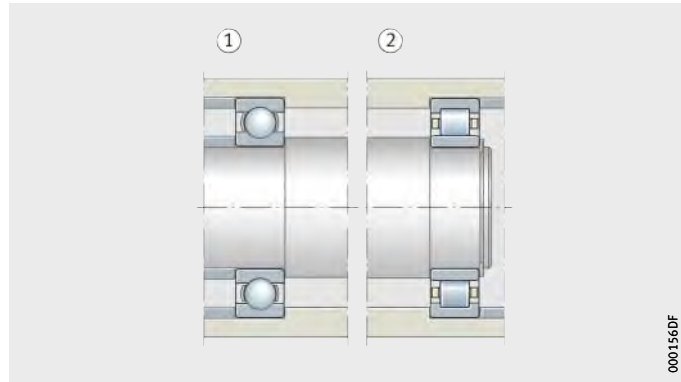

Deep groove ball bearing:
① Locating bearing
Cylindrical roller bearing NU:
② Non-locating bearing

Figure 1
Locating/non-locating bearing arrangements

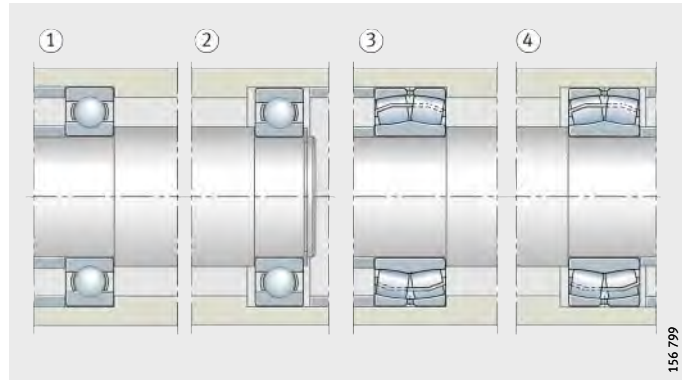

Deep groove ball bearings:
① Locating bearing
② Non-locating bearing
Spherical roller bearings:
③ Locating bearing
④ Non-locating bearing

Figure 2
Locating/non-locating bearing arrangements

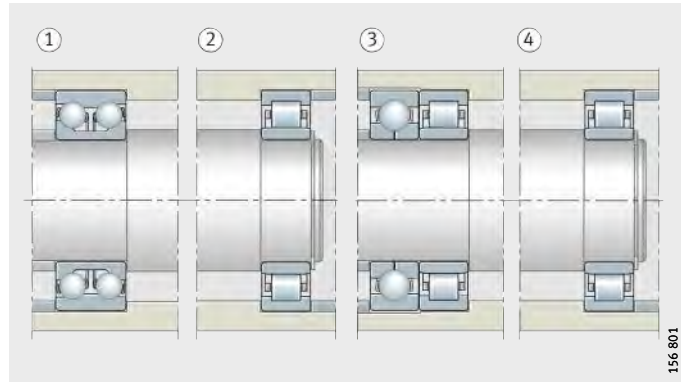

Double row angular contact ball bearing:
① Locating bearing
Cylindrical roller bearing NU:
② Non-locating bearing
Four point contact bearing and cylindrical roller bearing:
③ Locating bearing
Cylindrical roller bearing NU:
④ Non-locating bearing

Figure 3
Locating/non-locating bearing arrangements

Two tapered roller bearings:
① Locating bearing
Cylindrical roller bearing NU:
② Non-locating bearing
Cylindrical roller bearing NUP:
③ Locating bearing
Cylindrical roller bearing NU:
④ Non-locating bearing

Figure 4
Locating/non-locating bearing arrangements

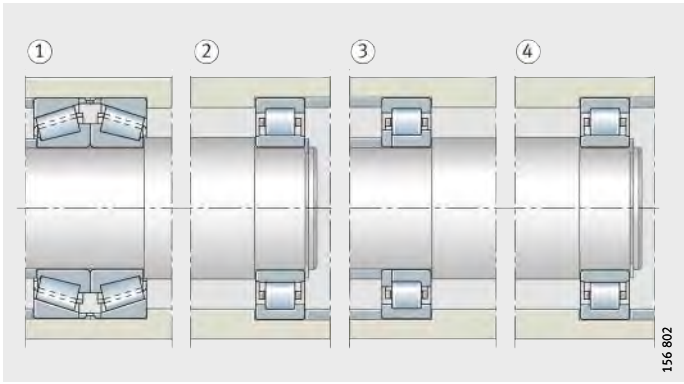

Pair of angular contact ball bearings of universal design:
① O arrangement
② X arrangement

Figure 5
Locating bearing arrangements

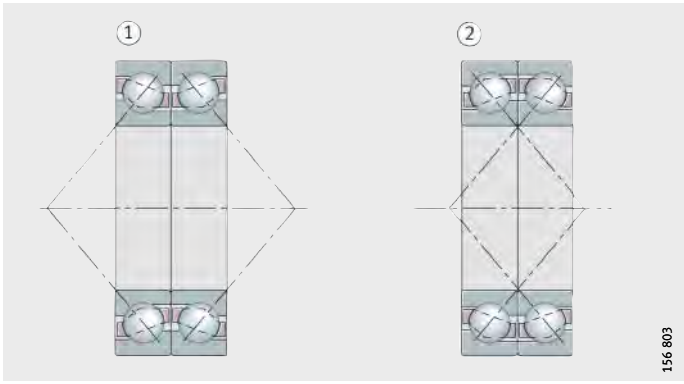

Spindle bearings of universal design:
① O arrangement
② X arrangement
③ Tandem O arrangement

Figure 6
Locating bearing arrangements

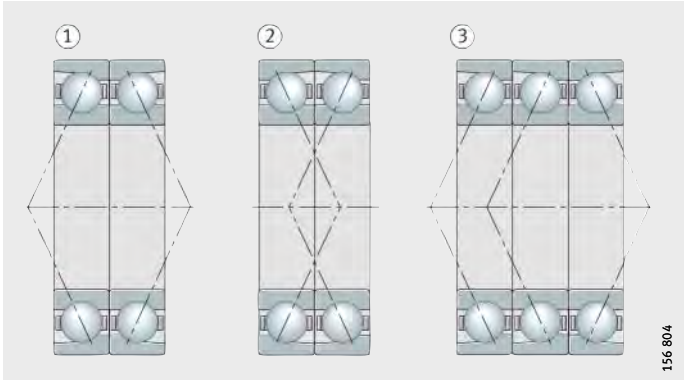

Pair of tapered roller bearings:
① O arrangement
② X arrangement

Figure 7
Locating bearing arrangements

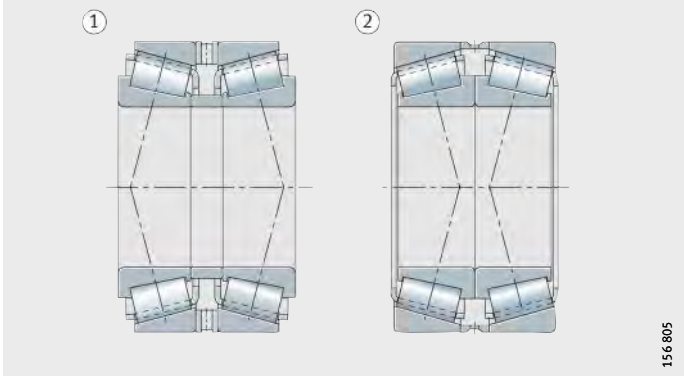

Adjusted bearing arrangement

These bearing arrangements normally consist of two symmetrically arranged angular contact ball bearings or tapered roller bearings, *Figure 8*. During mounting, one bearing ring is displaced on its seat until the bearing arrangement achieves the required clearance or the necessary preload.

Area of application

Due to this adjustment facility, the adjusted bearing arrangement is particularly suitable where close guidance is required, for example in pinion bearing arrangements with spiral toothed bevel gears and spindle bearing arrangements in machine tools.

X and O arrangements

A fundamental distinction is drawn between the O arrangement, *Figure 8* ①, and the X arrangement, *Figure 8* ②, of the bearings. In the O arrangement, the cones and their apexes S formed by the pressure lines point outwards, in the X arrangement they point inwards. The support base H, in other words the distance between the apexes of the pressure cones, is larger in the O arrangement than in the X arrangement. The O arrangement therefore gives the lower tilting clearance.

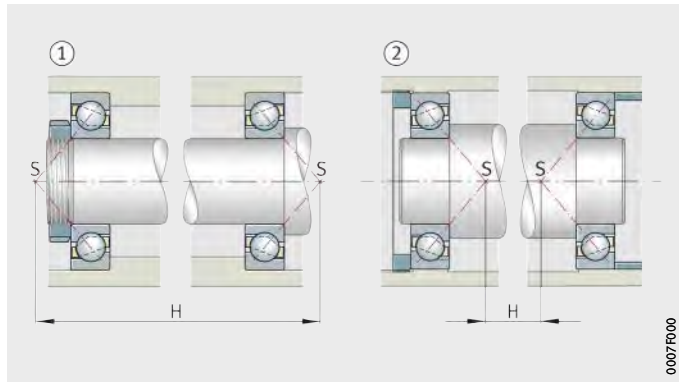

Angular contact ball bearings
① O arrangement
② X arrangement
S = apexes of the pressure cones
H = support distance

Figure 8
Adjusted bearing arrangement

Influence of thermal expansion in an X or O arrangement

When setting the axial internal clearance, thermal expansion must be taken into consideration. In the X arrangement, *Figure 9*, a temperature differential between the shaft and housing always leads to a reduction in internal clearance (preconditions: shaft and housing of identical material, inner ring and complete shaft at identical temperature, outer ring and complete housing at identical temperature).

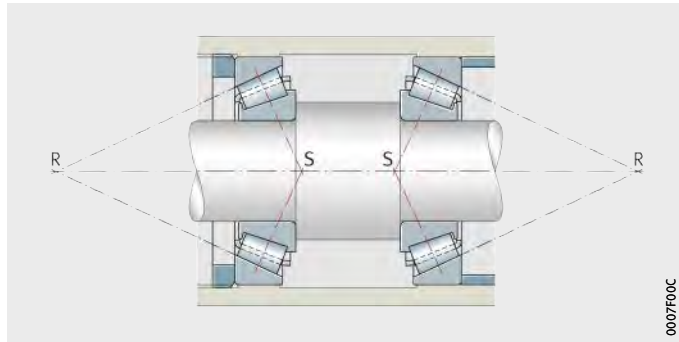

Tapered roller bearings
X arrangement
S = apexes of the pressure cones
R = roller cone apexes

Figure 9
Adjusted bearing arrangement

In the O arrangement, a distinction is drawn between three cases:

- The roller cone apexes R, i.e. the intersection points of the extended outer ring raceway with the bearing axis, coincide: the required internal clearance is achieved, *Figure 10* ①.
- The roller cones overlap if there is a short distance between the bearings: the axial internal clearance is reduced, *Figure 10* ②.
- The roller cones do not meet if there is a large distance between the bearings: the axial internal clearance is increased, *Figure 11*.

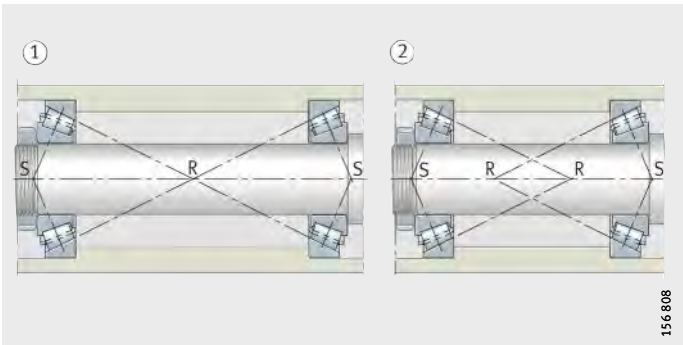

Tapered roller bearings in O arrangement
① Intersection points coincide
② Intersection points overlap
S = apexes of the pressure cones
R = roller cone apexes

Figure 10
Adjusted bearing arrangement

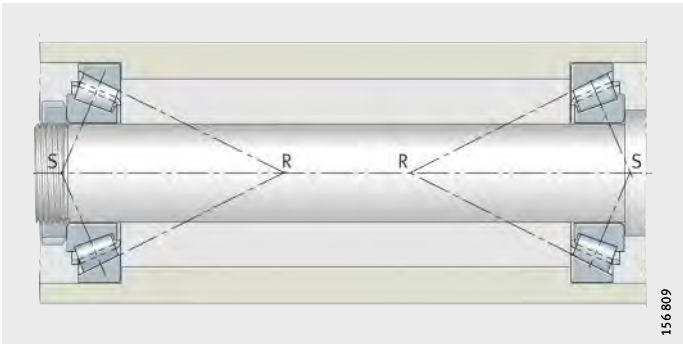

Tapered roller bearings in O arrangement, without overlapping of roller cone apexes
S = apexes of the pressure cones
R = roller cone apexes

Figure 11
Adjusted bearing arrangement

Floating bearing arrangement

The floating bearing arrangement is an economical solution where close axial guidance of the shaft is not required, *Figure 12*. The construction is similar to that of the adjusted bearing arrangement.

In the floating bearing arrangement, however, the shaft can be displaced in relation to the housing to the extent of the axial clearance s. The value s is defined as a function of the required guidance accuracy such that the bearings are not axially stressed even under unfavourable thermal conditions.

Suitable bearings

Suitable bearing types for the floating bearing arrangement include deep groove ball bearings, self-aligning ball bearings and spherical roller bearings.

In both bearings, one ring, usually an outer ring, has a fit that allows displacement.

In floating bearing arrangements and cylindrical roller bearings with cage NJ, the length compensation takes place within the bearings. The inner and outer rings can have tight fits, *Figure 12* ③.

Tapered roller bearings and angular contact ball bearings are not suitable for a floating bearing arrangement, since they must be adjusted in order to run correctly.

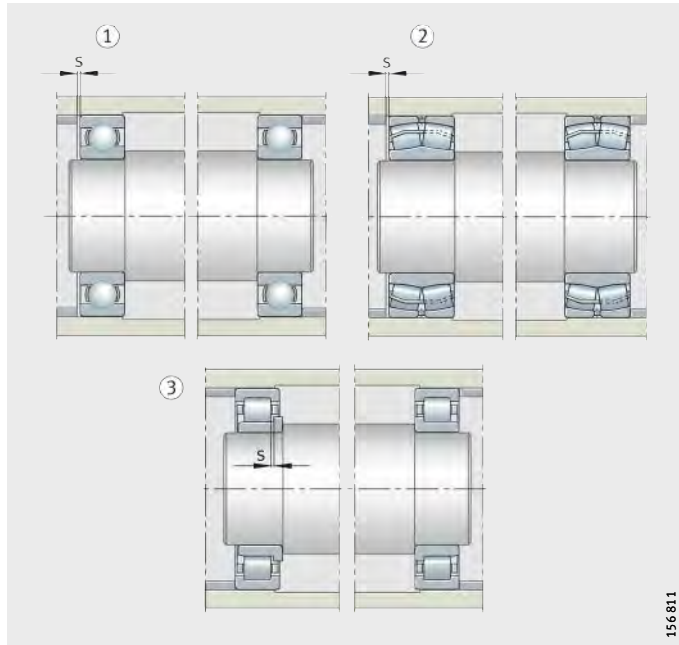

① Two deep groove ball bearings
② Two spherical roller bearings
③ Two cylindrical roller bearings NJ
s = axial clearance

Figure 12
Floating bearing arrangements

Fits

Rolling bearings are located on the shaft and in the housing in a radial, axial and tangential direction in accordance with their function. Radial and tangential location is normally achieved by force locking, i.e. by tight fits on the bearing rings. Axial location of the bearings is normally achieved by form fit.

Criteria for selection of fits

The following must be taken into consideration in the selection of fits:

- The bearing rings must be well supported on their circumference in order to allow full utilisation of the load carrying capacity of the bearing.
- The bearings must not creep on their mating parts, otherwise the seats will be damaged.
- One ring of the non-locating bearing must adapt to changes in the length of the shaft and housing and must therefore be capable of axial displacement.
- The bearings must be easy to mount and dismount.

Good support of the bearing rings on their circumference requires rigid seating. The requirement that rings must not creep on their mating parts also requires rigid seating. If non-separable bearings must be mounted and dismounted, a tight fit can only be achieved for one bearing ring.

In cylindrical roller bearings N und NU, both rings can have tight fits, since the length compensation takes place within the bearing and since the rings can be mounted separately.

With tight fits and a temperature differential between the inner and outer ring, the radial internal clearance of the bearing is reduced. This must be taken into consideration when selecting the radial internal clearance.

If materials other than cast iron or steel are used for the adjacent construction, the modulus of elasticity and the differing coefficients of thermal expansion of the materials must also be be taken into consideration to achieve rigid seating.

For aluminium housings, thin-walled housings and hollow shafts, a closer fit should be selected if necessary in order to achieve the same force locking as with cast iron, steel or solid shafts.

Higher loads, especially shocks, require a fit with larger interference and narrower geometrical tolerances.

Seats for axial bearings

Axial bearings, which support axial loads only, must not be guided radially – with the exception of axial cylindrical roller bearings which have a degree of freedom in the radial direction due to flat raceways. This is not present in the case of groove-shaped raceways and must be achieved by a loose fit for the stationary washer. A tight fit is normally selected for the rotating washer.

Where axial bearings also support radial forces, such as in axial spherical roller bearings, fits should be selected in the same way as for radial bearings.

The contact surfaces of the mating parts must be perpendicular to the axis of rotation (axial runout tolerance to IT5 or better), in order to ensure uniform load distribution over all the rolling elements.

Conditions of rotation

The conditions of rotation indicate the motion of one bearing ring with respect to the load direction and are expressed as either circumferential load or point load, see table.

Point load

If the ring remains stationary relative to the load direction, there are no forces that displace the ring relative to its seating surface. This type of load is described as point load.

There is no risk that the seating surface will be damaged and a loose fit is possible.

Circumferential load

If forces are present that displace the ring relative to its seating surface, every point on the raceway is subjected to load over the course of one revolution of the bearing.
A load with this characteristic is described as a circumferential load.

As damage to the bearing seating surface can occur, a tight fit should be used.

Conditions of rotation

Conditions of motion	Example	Schematic	Load case	Fit
Rotating inner ring Stationary outer ring Non-variable load direction	Shaft with weight load	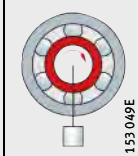 153 049E	Circumferential load on inner ring	Inner ring: tight fit necessary Outer ring: loose fit permissible
Stationary inner ring Rotating outer ring Load direction rotates with outer ring	Hub bearing arrangement with significant imbalance	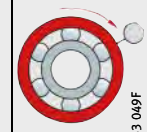 153 049F	and Point load on outer ring	
Stationary inner ring Rotating outer ring Non-variable load direction	Back-up roller (hub bearing arrangement)	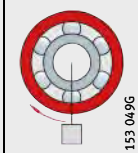 153 049G	Point load on inner ring	Inner ring: loose fit permissible Outer ring: tight fit necessary
Rotating inner ring Stationary outer ring Load direction rotates with inner ring	Centrifuge, vibrating screen	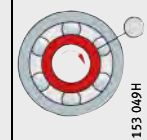 153 049H	and Circumferential load on outer ring	

Shaft and housing tolerances

The fit is determined by the ISO tolerances for shafts and housings (ISO 286-1:1988) in conjunction with the tolerances Δ_{dmp} for the bore and Δ_{Dmp} for the outside diameter of the bearings (DIN 620).

Tolerance zones

The ISO tolerances are defined in the form of tolerance zones. They are determined by their position relative to the zero line (= tolerance position) and their size (= tolerance grade, see ISO 286-1:1988). The tolerance position is indicated by letters (upper case for housings, lower case for shafts). For a schematic representation of the most common rolling bearing fits, see *Figure 13*.

Reference to tables of shaft and housing tolerances

The tables on pages 130 and 132 contain recommendations for the selection of shaft and housing tolerances that are valid for normal mounting and operating conditions.

Deviations are possible if particular requirements apply, for example in relation to running accuracy, smooth running or operating temperature. Increased running accuracies thus require closer tolerances such as tolerance grade 5 instead of 6. If the inner ring is warmer than the shaft during operation, the seating may loosen to an impermissible extent. A tighter fit must then be selected, for example m6 instead of k6.

In such cases, the question of fits can only be resolved by a compromise. The individual requirements must be weighed against each other and those fulfilled that give the best overall solution.

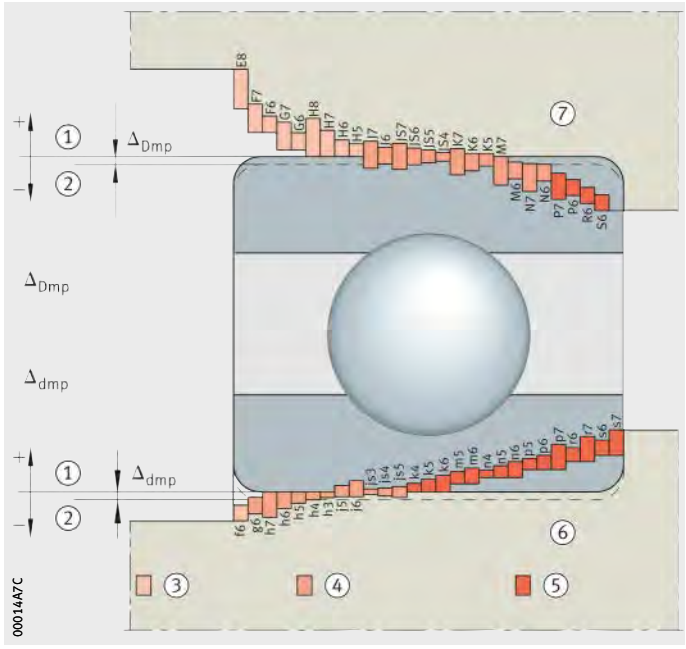

① Zero line
② Nominal diameter
③ Loose fit
④ Transition fit
⑤ Tight fit
⑥ Shaft diameter
⑦ Housing bore
Δ_{Dmp}
= tolerance for bearing outside diameter
Δ_{dmp}
= tolerance for bearing bore

Figure 13
Fits for rolling bearings

Shaft tolerances for radial bearings with cylindrical bore

Conditions of rotation	Bearing type	Shaft diameter mm	Displacement facility Load	Tolerance zone
Point load on inner ring	Ball bearings, roller bearings	All sizes	Inner ring easily displaced	g6 (g5)
			Inner ring not easily displaced Angular contact ball bearings and tapered roller bearings	h6 (j6)
Circumferential load on inner ring or indeterminate load direction	Ball bearings	100 to 200	Low loads[1)]	k6 (m6)
			Normal and high loads[2)]	m6 (m5)
		over 200	Low loads	m6 (m5)
			Normal and high loads	n6 (n5)
	Roller bearings	60 to 200	Low loads	k6 (k5)
			Normal loads	m6 (m5)
			High loads	n6 (n5)
		200 to 500	Normal loads	m6 (n6)
			High loads, shocks	p6
		over 500	Normal loads	n6 (p6)
			High loads	p6

1) $\overline{C/P > 10}$.

2) $C/P < 10$.

Shaft tolerances for axial bearings

Load	Bearing type	Shaft diameter	Operating conditions	Tolerance zone
Axial load	Axial deep groove ball bearings	All sizes	–	j6
	Axial cylindrical roller bearings with shaft locating washer		–	h6 (j6)
	Axial cylindrical roller and cage assembly		–	h8
Combined load	Axial spherical roller bearings	All sizes	Point load on shaft locating washer	j6
		up to 200 mm	Circumferential load on shaft locating washer	j6 (k6)
		over 200 mm		k6 (m6)

Housing tolerances for radial bearings

Conditions of rotation	Displacement facility Load	Operating conditions	Tolerance zone
Point load on outer ring	Outer ring easily displaced, housing unsplit	The tolerance grade is determined by the running accuracy required	H7 (H6)[1]
	Outer ring easily displaced, housing split		H8 (H7)
	Outer ring not easily displaced, housing unsplit	High running accuracy required	H6 (J6)
	Outer ring not easily displaced, angular contact ball bearings and tapered roller bearings with adjusted outer ring, housing split	Normal running accuracy	H7 (J7)
	Outer ring easily displaced	Heat input via shaft	G7[2]
Circumferential load on outer ring or indeterminate load direction	Low shocks, outer ring cannot be displaced	High running accuracy required K6, M6, N6 and P6	K7 (K6)
	Normal loads, shocks, outer ring cannot be displaced		M7 (M6)
	High loads, shocks ($C/P < 6$), outer ring cannot be displaced		N7 (N6)
	High loads, severe shocks, thin-walled housing, outer ring cannot be displaced		P7 (P6)

[1] G7 for housings made from GG if bearing outside diameter $D > 250$ mm and temperature differential between outer ring and housing > 10 K.

[2] F7 for housings made from GG if bearing outside diameter $D > 250$ mm and temperature differential between outer ring and housing > 10 K.

Housing tolerances for axial bearings

Load	Bearing type	Operating conditions	Tolerance zone
Axial load	Axial deep groove ball bearings	Normal running accuracy High running accuracy	E8 H6
	Axial cylindrical roller bearings with housing locating washer	–	H7 (K7)
	Axial cylindrical roller and cage assembly	–	H10
	Axial spherical roller bearings	Normal loads High loads	E8 G7
Combined loads Point load on housing locating washer	Axial spherical roller bearings	–	H7
Combined loads Circumferential load on housing locating washer	Axial spherical roller bearings	–	K7

Tables of shaft and housing fits

The numerical values for the fits, page 134 to page 145, are valid for solid shafts made from steel and for cast iron housings.
In the table header, below the nominal diameters, are the normal tolerances for the bore or outside diameters of radial bearings (excluding tapered roller bearings). Below these are the deviations for the most important tolerance zones for mounting of rolling bearings.

Shaft fits

In each cell are five numbers in accordance with the following scheme, for example for shaft ∅200 m6.

Example: table entry for shaft fit

Shaft deviation µm		Fit interference or fit clearance µm	
Maximum material value	+46	**76**[2)]	Interference or fit clearance if the maximum material values are combined
		56[1)2)]	Probable interference or fit clearance
Minimum material value	+17	**17**[3)]	Interference or fit clearance if the minimum material values are combined

1) The probable interference or fit clearance is the value obtained if the actual dimensions are one third away from the maximum material values.

2) Values printed in bold type indicate fit interference.

3) Values printed in regular type indicate fit clearance.

Shaft fits: see page 134 to page 141.

Housing fits

In each cell are five numbers in accordance with the following scheme, for example for housing ∅360 H6.

Example: table entry for housing fit

Housing deviation µm		Fit interference or fit clearance µm	
Minimum material value	+36	**0**[2)]	Interference or fit clearance if the maximum material values are combined
		25[1)2)]	Probable interference or fit clearance
Maximum material value	0	76[3)]	Interference or fit clearance if the minimum material values are combined

1) The probable interference or fit clearance is the value obtained if the actual dimensions are one third away from the maximum material values.

2) Values printed in bold type indicate fit interference.

3) Values printed in regular type indicate fit clearance.

Housing fits: see page 142 to page 145.

Shaft fits

Nominal shaft diameter in mm								
over incl.	**120** **140**		**140** **160**		**160** **180**		**180** **200**	
Deviation of bearing bore diameter in μm (normal tolerance)								
Δ_{dmp}	0 −25		0 −25		0 −25		0 −30	
Shaft deviation, fit interference or fit clearance in μm								
g5	−14 −32	**11** 3 32	−14 −32	**11** 3 32	−14 −32	**11** 3 32	−15 −35	**15** 2 35
g6	−14 −39	**11** 6 39	−14 −39	**11** 6 39	−14 −39	**11** 6 39	−15 −44	**15** 5 44
h5	0 −18	**25** **11** 18	0 −18	**25** **11** 18	0 −18	**25** **11** 18	0 −20	**30** **13** 20
h6	0 −25	**25** **8** 25	0 −25	**25** **8** 25	0 −25	**25** **8** 25	0 −29	**30** **10** 29
j5	+7 −11	**32** **18** 11	+7 −11	**32** **18** 11	+7 −11	**32** **18** 11	+7 −13	**37** **20** 13
j6	+14 −11	**39** **22** 11	+14 −11	**39** **22** 11	+14 −11	**39** **22** 11	+16 −13	**46** **26** 13
js5	+9 −9	**34** **20** 9	+9 −9	**34** **20** 9	+9 −9	**34** **20** 9	+10 −10	**40** **23** 10
js6	+12,5 −12,5	**38** **21** 13	+12,5 −12,5	**38** **21** 13	+12,5 −12,5	**38** **21** 13	+14,5 −14,5	**45** **25** 15
k5	+21 +3	**46** **32** **3**	+21 +3	**46** **32** **3**	+21 +3	**46** **32** **3**	+24 +4	**54** **37** **4**
k6	+28 +3	**53** **36** **3**	+28 +3	**53** **36** **3**	+28 +3	**53** **36** **3**	+33 +4	**63** **43** **4**
m5	+33 +15	**58** **44** **15**	+33 +15	**58** **44** **15**	+33 +15	**58** **44** **15**	+37 +17	**67** **50** **17**
m6	+40 +15	**65** **48** **15**	+40 +15	**65** **48** **15**	+40 +15	**65** **48** **15**	+46 +17	**76** **56** **17**

200 225	225 250	250 280	280 315	315 355	355 400	400 450	450 500
0 −30	0 −30	0 −35	0 −35	0 −40	0 −40	0 −45	0 −45
−15 −35 **15** **2** 35	−15 −35 **15** **2** 35	−17 −40 **18** **1** 40	−17 −40 **18** **1** 40	−18 −43 **22** **0** 43	−18 −43 **22** **0** 43	−20 −47 **25** **1** 47	−20 −47 **25** **1** 47
−15 −44 **15** 5 44	−15 −44 **15** 5 44	−17 −49 **18** 4 49	−17 −49 **18** 4 49	−18 −54 **22** 3 54	−18 −54 **22** 3 54	−20 −60 **25** 3 60	−20 −60 **25** 3 60
0 −20 **30** **13** 20	0 −20 **30** **13** 20	0 −23 **35** **16** 23	0 −23 **35** **16** 23	0 −25 **40** **18** 25	0 −25 **40** **18** 25	0 −27 **45** **21** 27	0 −27 **45** **21** 27
0 −29 **30** **10** 29	0 −29 **30** **10** 29	0 −32 **35** **13** 32	0 −32 **35** **13** 32	0 −36 **40** **15** 36	0 −36 **40** **15** 36	0 −40 **45** **17** 40	0 −40 **45** **17** 40
+7 −13 **37** **20** 13	+7 −13 **37** **20** 13	+7 −16 **42** **23** 16	+7 −16 **42** **23** 16	+7 −18 **47** **25** 18	+7 −18 **47** **25** 18	+7 −20 **52** **28** 20	+7 −20 **52** **28** 20
+16 −13 **46** **26** 13	+16 −13 **46** **26** 13	+16 −16 **51** **29** 16	+16 −16 **51** **29** 16	+18 −18 **58** **33** 18	+18 −18 **58** **33** 18	+20 −20 **65** **37** 20	+20 −20 **65** **37** 20
+10 −10 **40** **23** 10	+10 −10 **40** **23** 10	+11,5 −11,5 **47** **27** 12	+11,5 −11,5 **47** **27** 12	+12,5 −12,5 **53** **32** 13	+12,5 −12,5 **53** **32** 13	+13,5 −13,5 **59** **35** 14	+13,5 −13,5 **59** **35** 14
+14,5 −14,5 **45** **25** 15	+14,5 −14,5 **45** **25** 15	+16 −16 **51** **29** 16	+16 −16 **51** **29** 16	+18 −18 **58** **33** 18	+18 −18 **58** **33** 18	+20 −20 **65** **37** 20	+20 −20 **65** **37** 20
+24 +4 **54** **37** **4**	+24 +4 **54** **37** **4**	+27 +4 **62** **43** **4**	+27 +4 **62** **43** **4**	+29 +4 **69** **47** **4**	+29 +4 **69** **47** **4**	+32 +5 **77** **53** **5**	+32 +5 **77** **53** **5**
+33 +4 **63** **43** **4**	+33 +4 **63** **43** **4**	+36 +4 **71** **49** **4**	+36 +4 **71** **49** **4**	+40 +4 **80** **55** **4**	+40 +4 **80** **55** **4**	+45 +5 **90** **62** **5**	+45 +5 **90** **62** **5**
+37 +17 **67** **50** **17**	+37 +17 **67** **50** **17**	+43 +20 **78** **59** **20**	+43 +20 **78** **59** **20**	+46 +21 **86** **64** **21**	+46 +21 **86** **64** **21**	+50 +23 **95** **71** **23**	+50 +23 **95** **71** **23**
+46 +17 **76** **56** **17**	+46 +17 **76** **56** **17**	+52 +20 **87** **65** **20**	+52 +20 **87** **65** **20**	+57 +21 **97** **72** **21**	+57 +21 **97** **72** **21**	+63 +23 **108** **80** **23**	+63 +23 **108** **80** **23**

Shaft fits
continued

Nominal shaft diameter in mm								
over incl.	**500** **560**		**560** **630**		**630** **710**		**710** **800**	
Deviation of bearing bore diameter in μm (normal tolerance)								
Δ_{dmp}	0 −50		0 −50		0 −75		0 −75	
Shaft deviation, fit interference or fit clearance in μm								
g5	−22 −51	**28** **1** 51	−22 −51	**28** **1** 51	−24 −56	**51** **15** 56	−24 −56	**51** **15** 56
g6	−22 −66	**28** 4 66	−22 −66	**28** 4 66	−24 −74	**51** **9** 74	−24 −74	**51** **9** 74
h5	0 −29	**50** **23** 29	0 −29	**50** **23** 29	0 −32	**75** **39** 32	0 −32	**75** **39** 32
h6	0 −44	**50** **18** 44	0 −44	**50** **18** 44	0 −50	**75** **33** 50	0 −50	**75** **33** 50
j5	–	–	–	–	–	–	–	–
j6	+22 −22	**72** **40** 22	+22 −22	**72** **40** 22	+25 −25	**100** **58** 25	+25 −25	**100** **58** 25
js5	+14,5 −14,5	**65** **38** 15	+14,5 −14,5	**65** **38** 15	+16 −16	**91** **55** 16	+16 −16	**91** **55** 16
js6	+22 −22	**72** **40** 22	+22 −22	**72** **40** 22	+25 −25	**100** **58** 25	+25 −25	**100** **58** 25
k5	+29 0	**79** **53** **0**	+29 0	**79** **53** **0**	+32 0	**107** **71** **0**	+32 0	**107** **71** **0**
k6	+44 0	**94** **62** **0**	+44 0	**94** **62** **0**	+50 0	**125** **83** **0**	+50 0	**125** **83** **0**
m5	+55 +26	**105** **78** **26**	+55 +26	**105** **78** **26**	+62 +30	**137** **101** **30**	+62 +30	**137** **101** **30**
m6	+70 +26	**120** **88** **26**	+70 +26	**120** **88** **26**	+80 +30	**155** **113** **30**	+80 +30	**155** **113** **30**



	800 **900**		**900** **1000**		**1 000** **1 120**		**1 120** **1 250**		**1 250** **1 600**		**1 600** **2 000**		**2 000** **2 500**	
	0 −100		0 −100		0 −125		0 −125		0 −160		0 −200		0 −250	
−26 −62	**74** **29** 62		−26 −62	**74** **29** 62	−28 −70	**97** **41** 70	−28 −70	**97** **41** 70	−30 −80	**130** **60** 80	−32 −92	**168** **81** 92	−34 −104	**216** **109** 104
−26 −82	**74** **24** 82		−26 −82	**74** **24** 82	−28 −94	**97** **33** 94	−28 −94	**97** **33** 94	−30 −108	**130** **41** 108	−32 −124	**168** **71** 124	−34 −144	**216** **96** 144
0 −36	**100** **55** 36		0 −36	**100** **55** 36	0 −42	**125** **69** 42	0 −42	**125** **69** 42	0 −50	**160** **90** 50	0 −60	**200** **119** 60	0 −70	**250** **143** 70
0 −56	**100** **48** 56		0 −56	**100** **48** 56	0 −66	**125** **61** 66	0 −66	**125** **61** 66	0 −78	**160** **81** 78	0 −92	**200** **103** 92	0 −110	**250** **130** 110
–	–		–	–	–	–	–	–	–	–	–	–	–	–
+28 −28	**128** **76** 28		+28 −28	**128** **76** 28	+33 −33	**158** **94** 33	+33 −33	**158** **94** 33	+39 −39	**199** **120** 39	+46 −46	**246** **149** 46	+55 −55	**305** **185** 55
+18 −18	**118** **73** 18		+18 −18	**118** **73** 18	+21 −21	**146** **90** 21	+21 −21	**146** **90** 21	+25 −25	**185** **115** 25	+30 −30	**230** **143** 30	+35 −35	**285** **178** 35
+28 −28	**128** **76** 28		+28 −28	**128** **76** 28	+33 −33	**158** **94** 33	+33 −33	**158** **94** 33	+39 −39	**199** **120** 39	+46 −46	**246** **149** 46	+55 −55	**305** **185** 55
+36 0	**136** **91** **0**		+36 0	**136** **91** **0**	+42 0	**167** **111** **0**	+42 0	**167** **111** **0**	+50 0	**210** **140** **0**	+60 0	**260** **173** **0**	+70 0	**320** **213** **0**
+56 0	**156** **104** **0**		+56 0	**156** **104** **0**	+66 0	**191** **127** **0**	+66 0	**191** **127** **0**	+78 0	**238** **159** **0**	+92 0	**292** **195** **0**	+110 0	**360** **240** **0**
+70 +34	**170** **125** **34**		+70 +34	**170** **125** **34**	+82 +40	**207** **151** **40**	+82 +40	**207** **151** **40**	+98 +48	**258** **188** **48**	+118 +58	**318** **193** **58**	+138 +68	**388** **236** **68**
+90 +34	**190** **138** **34**		+90 +34	**190** **138** **34**	+106 +40	**231** **167** **40**	+106 +40	**231** **167** **40**	+126 +48	**286** **207** **48**	+150 +58	**350** **214** **58**	+178 +68	**428** **263** **68**

Shaft fits

Nominal shaft diameter in mm								
over incl.	**120** **140**		**140** **160**		**160** **180**		**180** **200**	
Deviation of bearing bore diameter in μm (normal tolerance)								
Δ_{dmp}	0 −25		0 −25		0 −25		0 −30	
Shaft deviation, fit interference or fit clearance in μm								
n5	+45 +27	**70** **56** **27**	+45 +27	**70** **56** **27**	+45 +27	**70** **56** **27**	+51 +31	**81** **64** **31**
n6	+52 +27	**77** **60** **27**	+52 +27	**77** **60** **27**	+52 +27	**77** **60** **27**	+60 +31	**90** **70** **31**
p6	+68 +43	**93** **76** **43**	+68 +43	**93** **76** **43**	+68 +43	**93** **76** **43**	+79 +50	**109** **89** **50**
p7	+83 +43	**108** **87** **43**	+83 +43	**108** **87** **43**	+83 +43	**108** **87** **43**	+96 +50	**126** **101** **50**
r6	+88 +63	**113** **97** **63**	+90 +65	**115** **99** **65**	+93 +68	**118** **102** **68**	+106 +77	**136** **116** **77**
r7	+103 +63	**128** **107** **63**	+105 +65	**130** **109** **65**	+108 +68	**133** **112** **68**	+123 +77	**153** **128** **77**
Shaft tolerances for adapter sleeves and withdrawal sleeves								
h7/$\frac{IT5}{2}$	0 −40	*9*	0 −40	*9*	0 −40	*9*	0 −46	*10*
h8/$\frac{IT5}{2}$	0 −63	*9*	0 −63	*9*	0 −63	*9*	0 −72	*10*
h9/$\frac{IT6}{2}$	0 −100	*12,5*	0 −100	*12,5*	0 −100	*12,5*	0 −115	*14,5*

The values printed in *italic* indicate guide values for the cylindricity tolerance t_1 (DIN ISO 1101).

200 225	225 250	250 280	280 315	315 355	355 400	400 450
0 −30	0 −30	0 −35	0 −35	0 −40	0 −40	0 −45
+51 **81** +31 **64** **31**	+51 **81** +31 **64** **31**	+57 **92** +34 **73** **34**	+57 **92** +34 **73** **34**	+62 **102** +37 **80** **37**	+62 **102** +37 **80** **37**	+67 **112** +40 **88** **40**
+60 **90** +31 **70** **31**	+60 **90** +31 **70** **31**	+66 **101** +34 **79** **34**	+66 **101** +34 **79** **34**	+73 **113** +37 **88** **37**	+73 **113** +37 **88** **37**	+80 **125** +40 **97** **40**
+79 **109** +50 **89** **50**	+79 **109** +50 **89** **50**	+88 **123** +56 **101** **56**	+88 **123** +56 **101** **56**	+98 **138** +62 **113** **62**	+98 **138** +62 **113** **62**	+108 **153** +68 **125** **68**
+96 **126** +50 **101** **50**	+96 **126** +50 **101** **50**	+108 **143** +56 **114** **56**	+108 **143** +56 **114** **56**	+119 **159** +62 **127** **62**	+119 **159** +62 **127** **62**	+131 **176** +68 **139** **68**
+109 **139** +80 **119** **80**	+113 **143** +84 **123** **84**	+126 **161** +94 **138** **94**	+130 **165** +98 **142** **98**	+144 **184** +108 **159** **108**	+150 **190** +114 **165** **114**	+166 **211** +126 **183** **126**
+126 **156** +80 **131** **80**	+130 **160** +84 **135** **84**	+146 **181** +94 **152** **94**	+150 **185** +98 **156** **98**	+165 **205** +108 **173** **108**	+171 **211** +114 **179** **114**	+189 **234** +126 **198** **126**
0 −46 *10*	0 −46 *10*	0 −52 *11,5*	0 −52 *11,5*	0 −57 *12,5*	0 −57 *12,5*	0 −63 *13,5*
0 −72 *10*	0 −72 *10*	0 −81 *11,5*	0 −81 *11,5*	0 −89 *12,5*	0 −89 *12,5*	0 −97 *13,5*
0 −115 *14,5*	0 −115 *14,5*	0 −130 *16*	0 −130 *16*	0 −140 *18*	0 −140 *18*	0 −155 *20*

Shaft fits
continued

Nominal shaft diameter in mm								
over incl.	**450** **500**		**500** **560**		**560** **630**		**630** **710**	
Deviation of bearing bore diameter in μm (normal tolerance)								
Δ_{dmp}	0 −45		0 −50		0 −50		0 −75	
Shaft deviation, fit interference or fit clearance in μm								
n5	+67 +40	**112** **88** **40**	+73 +44	**123** **96** **44**	+73 +44	**123** **96** **44**	+82 +50	**157** **121** **50**
n6	+80 +40	**125** **97** **40**	+88 +44	**138** **106** **44**	+88 +44	**138** **106** **44**	+100 +50	**175** **133** **50**
p6	+108 +68	**153** **125** **68**	+122 +78	**172** **140** **78**	+122 +78	**172** **140** **78**	+138 +88	**213** **171** **88**
p7	+131 +68	**176** **139** **68**	+148 +78	**198** **158** **78**	+148 +78	**198** **158** **78**	+168 +88	**243** **199** **88**
r6	+172 +132	**217** **189** **132**	+194 +150	**244** **212** **150**	+199 +155	**249** **217** **155**	+225 +175	**300** **258** **175**
r7	+195 +132	**240** **204** **132**	+220 +150	**270** **230** **150**	+225 +155	**275** **235** **155**	+255 +175	**330** **278** **175**
Shaft tolerances for adapter sleeves and withdrawal sleeves								
h7/$\frac{IT5}{2}$	0 −63	*13,5*	0 −70	*14,5*	0 −70	*14,5*	0 −80	*16*
h8/$\frac{IT5}{2}$	0 −97	*13,5*	0 −110	*14,5*	0 −110	*14,5*	0 −125	*16*
h9/$\frac{IT6}{2}$	0 −155	*20*	0 −175	*22*	0 −175	*22*	0 −200	*25*

The values printed in *italic* indicate guide values for the cylindricity tolerance t_1 (DIN ISO 1101).

710 800	800 900	900 1000	1000 1120	1120 1250	1250 1600	1600 2000	2000 2500
0 −75	0 −100	0 −100	0 −125	0 −125	0 −160	0 −200	0 −250
+82 +50 **157** **121** **50**	+92 +56 **192** **147** **56**	+92 +56 **192** **147** **56**	+108 +66 **233** **177** **66**	+108 +66 **233** **177** **66**	+128 +78 **288** **218** **78**	+152 +92 **352** **204** **92**	+180 +110 **430** **283** **110**
+100 +50 **175** **133** **50**	+112 +56 **212** **160** **56**	+112 +56 **212** **160** **56**	+132 +66 **257** **193** **66**	+132 +66 **257** **193** **66**	+156 +78 **316** **237** **78**	+184 +92 **384** **225** **92**	+220 +110 **470** **277** **110**
+138 +88 **213** **171** **88**	+156 +100 **256** **204** **100**	+156 +100 **256** **204** **100**	+186 +120 **311** **247** **120**	+186 +120 **311** **247** **120**	+218 +140 **378** **299** **140**	+262 +170 **462** **251** **170**	+305 +195 **555** **305** **195**
+168 +88 **243** **199** **88**	+190 +100 **290** **227** **100**	+190 +100 **290** **227** **100**	+225 +120 **350** **273** **120**	+225 +120 **350** **273** **120**	+265 +140 **425** **330** **140**	+320 +170 **520** **290** **170**	+370 +195 **620** **348** **195**
+235 +185 **310** **268** **185**	+266 +210 **366** **314** **210**	+276 +220 **376** **324** **220**	+316 +250 **441** **377** **250**	+326 +260 **451** **387** **260**	– –	– –	– –
+265 +185 **340** **288** **185**	+300 +210 **400** **337** **210**	+310 +220 **410** **347** **220**	+355 +250 **480** **403** **250**	+365 +260 **490** **413** **260**	– –	– –	– –
0 −80 *16*	0 −90 *18*	0 −90 *18*	0 −105 *21*	0 −105 *21*	0 −125 *25*	0 −150 *30*	0 −175 *35*
0 −125 *16*	0 −140 *18*	0 −140 *18*	0 −165 *21*	0 −165 *21*	0 −195 *25*	0 −230 *30*	0 −280 *35*
0 −200 *25*	0 −230 *28*	0 −230 *28*	0 −260 *33*	0 −260 *33*	0 −310 *39*	0 −370 *46*	0 −440 *55*

Housing fits

Nominal housing bore diameter in mm								
over incl.	**315** **400**		**400** **500**		**500** **630**		**630** **800**	
Deviation of bearing outside diameter in μm (normal tolerance)								
Δ_{Dmp}	0 −40		0 −45		0 −50		0 −75	
Housing deviation, fit interference or fit clearance in μm								
E8	+214 +125	125 168 254	+232 +135	135 182 277	+255 +145	145 199 305	+285 +160	160 227 360
F7	+119 +62	62 94 159	+131 +68	68 104 176	+146 +76	76 116 196	+160 +80	80 132 235
G6	+54 +18	18 43 94	+60 +20	20 48 105	+66 +22	22 54 116	+74 +24	24 66 149
G7	+75 +18	18 50 115	+83 +20	20 56 128	+92 +22	22 62 142	+104 +24	24 76 179
H6	+36 0	**0** 25 76	+40 0	**0** 28 85	+44 0	**0** 32 94	+50 0	**0** 42 125
H7	+57 0	**0** 32 97	+63 0	**0** 36 108	+70 0	**0** 40 120	+80 0	**0** 52 155
H8	+89 0	**0** 43 129	+97 0	**0** 47 142	+110 0	**0** 54 160	+125 0	**0** 67 200
J6	+29 −7	**7** 18 69	+33 −7	**7** 21 78	–	–	–	–
J7	+39 −18	**18** 14 79	+43 −20	**20** 16 88	–	–	–	–
JS6	+18 −18	**18** 6 58	+20 −20	**20** 8 65	+22 −22	**22** 10 72	+25 −25	**25** 17 100
JS7	+28,5 −28,5	**28,5** 3 68,5	+31,5 −31,5	**31,5** 4 76,5	+35 −35	**35** 5 85	+40 −40	**40** 12 115
K6	+7 −29	**29** **4** 47	+8 −32	**32** **4** 53	0 −44	**44** **12** 50	0 −50	**50** **8** 75
K7	+17 −40	**40** **8** 57	+18 −45	**45** **9** 63	0 −70	**70** **30** 50	0 −80	**80** **28** 75



800 1000		1000 1250		1250 1600		1600 2000		2000 2500		2500 3150	
0 −100		0 −125		0 −160		0 −200		0 −250		0 −300	
+310 +170	170 250 410	+360 +195	195 292 485	+415 +220	220 338 575	+470 +240	240 384 670	+540 +260	260 436 790	+620 +290	290 500 920
+176 +86	86 149 276	+203 +98	98 175 328	+235 +110	110 205 395	+270 +120	120 237 470	+305 +130	130 271 555	+355 +145	145 315 655
+82 +26	26 78 182	+94 +28	28 93 219	+108 +30	30 109 268	+124 +32	32 130 324	+144 +34	34 154 394	+173 +38	38 183 473
+116 +26	26 89 216	+133 +28	28 105 258	+155 +30	30 125 315	+182 +32	32 149 382	+209 +34	34 175 459	+248 +38	38 208 548
+56 0	**0** 52 156	+66 0	**0** 64 191	+78 0	**0** 79 238	+92 0	**0** 98 292	+110 0	**0** 120 360	+135 0	**0** 145 435
+90 0	**0** 63 190	+105 0	**0** 77 230	+125 0	**0** 95 285	+150 0	**0** 117 350	+175 0	**0** 142 425	+210 0	**0** 170 510
+140 0	**0** 80 240	+165 0	**0** 97 290	+195 0	**0** 118 355	+230 0	**0** 143 430	+280 0	**0** 177 530	+330 0	**0** 210 630
–	–	–	–	–	–	–	–	–	–	–	–
–	–	–	–	–	–	–	–	–	–	–	–
+28 −28	**28** 24 128	+33 −33	**33** 31 158	+39 −39	**39** 40 199	+46 −46	**46** 52 246	+55 −55	**55** 65 305	+67 −67	**67** 78 367
+45 −45	**45** 18 145	+52 −52	**52** 24 177	+62 −62	**62** 32 222	+75 −75	**75** 42 275	+87 −87	**87** 54 337	+105 −105	**105** 65 405
0 −56	**56** **4** 100	0 −66	**66** **2** 125	0 −78	**78** 1 160	0 −92	**92** 6 200	0 −110	**110** 10 250	0 −135	**135** 10 300
0 −90	**90** **27** 100	0 −105	**105** **28** 125	0 −125	**125** **30** 160	0 −150	**150** **33** 200	0 −175	**175** **34** 250	0 −210	**210** **40** 300

Housing fits

Nominal housing bore diameter in mm								
over incl.	**315** **400**		**400** **500**		**500** **630**		**630** **800**	
Deviation of bearing outside diameter in μm (normal tolerance)								
Δ_{Dmp}	0 −40		0 −45		0 −50		0 −75	
Housing deviation, fit interference or fit clearance in μm								
M6	−10 −46	**46** **21** 30	−10 −50	**50** **22** 35	−26 −70	**70** **38** 24	−30 −80	**80** **38** 45
M7	0 −57	**57** **25** 40	0 −63	**63** **27** 45	−26 −96	**96** **56** 24	−30 −110	**110** **58** 45
N6	−26 −62	**62** **37** 14	−27 −67	**67** **39** 18	−44 −88	**88** **56** 6	−50 −100	**100** **58** 25
N7	−16 −73	**73** **41** 24	−17 −80	**80** **44** 28	−44 −114	**114** **74** 6	−50 −130	**130** **78** 25
P6	−51 −87	**87** **62** **11**	−55 −95	**95** **67** **10**	−78 −122	**122** **90** **28**	−88 −138	**138** **96** **13**
P7	−41 −98	**98** **66** **1**	−45 −108	**108** **72** **0**	−78 −148	**148** **108** **28**	−88 −168	**168** **126** **13**



	800 **1000**		**1000** **1250**		**1250** **1600**		**1600** **2000**		**2000** **2500**		**2500** **3150**	
	0 −100		0 −125		0 −160		0 −200		0 −250		0 −300	
−34 −90	**90** **38** 66	−40 −106	**106** **45** 85	−48 −126	**126** **47** 112	−58 −150	**150** **52** 142	−68 −178	**178** **58** 182	−76 −211	**211** **66** 224
−34 −124	**124** **61** 66	−40 −145	**145** **68** 85	−48 −173	**173** **78** 112	−58 −208	**208** **91** 142	−68 −243	**243** **102** 182	−76 −286	**286** **116** 224
−56 −112	**112** **60** 44	−66 −132	**132** **67** 59	−78 −156	**156** **77** 82	−92 −184	**184** **86** 108	−110 −220	**220** **100** 140	−135 −270	**270** **125** 165
−56 −146	**146** **83** 44	−66 −171	**171** **94** 59	−78 −203	**203** **108** 82	−92 −242	**242** **125** 108	−110 −285	**285** **144** 140	−135 −345	**345** **175** 165
−100 −156	**156** **104** **0**	−120 −186	**186** **121** 5	−140 −218	**218** **139** 20	−170 −262	**262** **164** 30	−195 −305	**305** **185** 55	−240 −375	**375** **230** 60
−100 −190	**190** **127** **0**	−120 −225	**225** **148** 5	−140 −265	**265** **159** 20	−170 −320	**320** **203** 30	−195 −370	**370** **229** 55	−240 −450	**450** **280** 60

Enveloping circle

For bearings without an inner ring, the enveloping circle F_w is used. This is the inner inscribed circle of the cylindrical rollers in clearance-free contact with the outer raceway, *Figure 14*. Before the bearings are mounted, it is in the tolerance zone F6. Deviations for F6, see table.

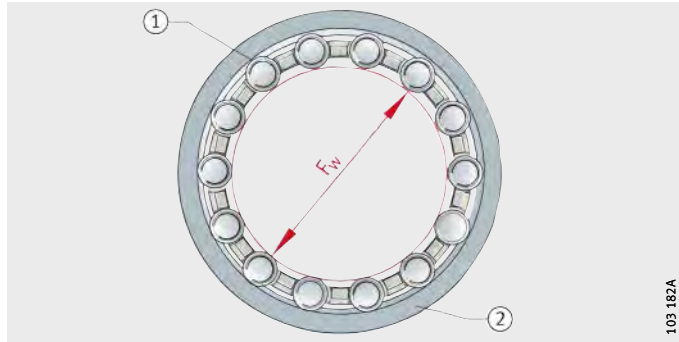

① Cylindrical roller
② Outer raceway
F_w = enveloping circle diameter

Figure 14
Enveloping circle

Deviations for the enveloping circle diameter

Enveloping circle diameter F_w mm		Tolerance zone F6 Tolerance for enveloping circle diameter F_w	
		Upper deviation	Lower deviation
over	incl.	µm	µm
250	315	+88	+56
315	400	+98	+62
400	500	+108	+68
500	630	+120	+76
630	800	+130	+80
800	1000	+142	+86
1000	1250	+164	+98
1250	1600	+188	+110
1600	2000	+212	+120

Geometrical tolerances of bearing seating surfaces

In order to achieve the required fit, the bearing seats and fit surfaces of the shaft and housing bore must conform to certain tolerances, *Figure 15* and table, page 148.

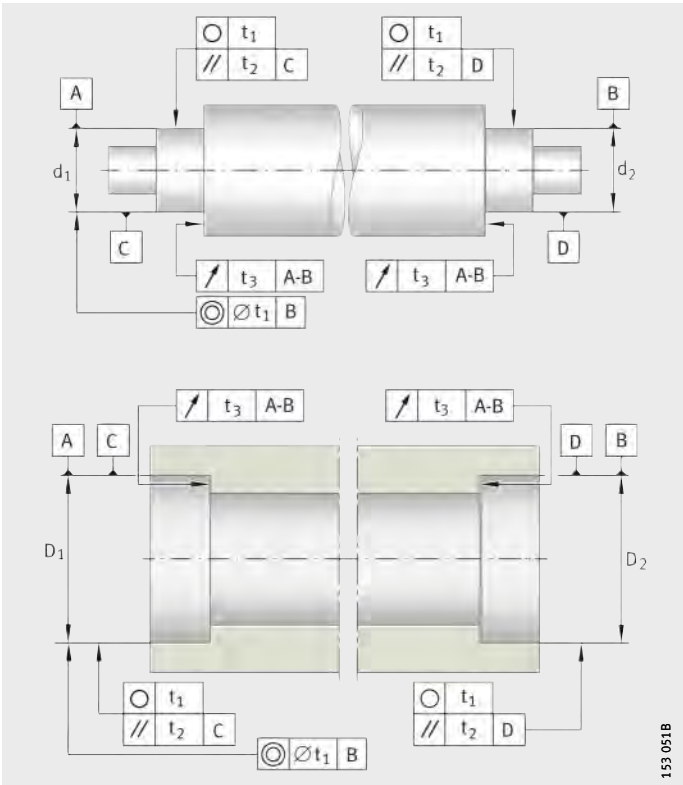

t_1 = roundness
t_2 = parallelism
t_3 = axial runout of abutment shoulders

Figure 15
Dimensional and geometrical tolerances

Accuracy of bearing seating surfaces

The degree of accuracy for the bearing seat tolerances on the shaft and in the housing is given in the table, page 148, and by the ISO fundamental tolerances (ISO 286-1:1988).

Second bearing seat

The tolerances for a second bearing seat on the shaft (d_2) or in the housing (D_2) (expressed in terms of coaxiality to DIN ISO 1101) must be based on the angular adjustment facility of the bearing. Misalignments due to elastic deformation of the shaft and housing must be taken into consideration.

Housings

For split housings, the joints must be free from burrs.

The accuracy of the bearing seats is determined as a function of the accuracy of the bearing selected.

Geometrical tolerances of bearing seating surfaces

Bearing tolerance class	Bearing seating surface	Diameter tolerance	Roundness tolerance t_1	Parallelism tolerance t_2	Abutment shoulder face runout t_3
PN P6X	Shaft	IT6 (IT5)	Circumferential load IT4/2	IT4	IT4
			Point load IT5/2	IT5	
	Housing	IT7 (IT6)	Circumferential load IT5/2	IT5	IT5
			Point load IT6/2	IT6	
P5	Shaft	IT5	Circumferential load IT3/2	IT2	IT2
			Point load IT4/2	IT3	
	Housing	IT6	Circumferential load IT4/2	IT3	IT3
			Point load IT5/2	IT4	
P4 SP	Shaft	IT4	Circumferential load IT2/2	IT1	IT1
			Point load IT3/2	IT2	
	Housing	IT5	Circumferential load IT3/2	IT2	IT2
			Point load IT4/2	IT3	
UP P4S	Shaft	IT3	Circumferential load IT1/2	IT0	IT0
			Point load IT2/2	IT1	
	Housing	IT4	Circumferential load IT2/2	IT1	IT1
			Point load IT3/2	IT2	

ISO fundamental tolerances (IT grades) to ISO 286-1:1988, see page 150.

Roughness of bearing seats

The roughness of the bearing seats must be matched to the tolerance class of the bearings. The mean roughness value R_a must not be too high, in order to maintain the interference loss within limits. Shafts should be ground and bores should be precision turned. Guide values: see table.

The bore and shaft tolerances and permissible roughness values are also given in the design and safety guidelines in the product sections. The guide values for roughness correspond to DIN 5 425-1.

Guide values for roughness of bearing seating surfaces

Diameter of bearing seat d (D) mm		Recommended mean roughness values R_a[2] for ground bearing seats Corresponding diameter tolerance µm			
over	incl.	IT7	IT6	IT5	IT4
80	500	1,6 (N7)	1,6 (N7)	0,8 (N6)	0,4 (N5)
500	1 250	3,2 (N8)[1]	1,6 (N7)	1,6 (N7)	0,8 (N6)

[1] When mounting is carried out using the hydraulic method, R_a = 1,6 µm should not be exceeded.

[2] The values in brackets are roughness classes to DIN ISO 1302.

Values for IT grades

The table shows numerical values for the ISO fundamental tolerances (IT grades) to ISO 286-1:1988.

IT grades and values

Nominal dimension in mm				
over	**120**	**180**	**250**	**315**
incl.	**180**	**250**	**315**	**400**
Values in μm				
IT0	2	3	4	5
IT1	3,5	4,5	6	7
IT2	5	7	8	9
IT3	8	10	12	13
IT4	12	14	16	18
IT5	18	20	23	25
IT6	25	29	32	36
IT7	40	46	52	57
IT8	63	72	81	89
IT9	100	115	130	140
IT10	160	185	210	230
IT11	250	290	320	360
IT12	400	460	520	570



400	**500**	**630**	**800**	**1 000**	**1 250**	**1 600**	**2 000**	**2 500**
500	**630**	**800**	**1 000**	**1 250**	**1 600**	**2 000**	**2 500**	**3150**
6	–	–	–	–	–	–	–	–
8	–	–	–	–	–	–	–	–
10	–	–	–	–	–	–	–	–
15	–	–	–	–	–	–	–	–
20	–	–	–	–	–	–	–	–
27	29	32	36	47	50	60	70	86
40	44	50	56	66	78	92	110	135
63	70	80	90	105	125	150	175	210
97	110	125	140	165	195	230	280	330
155	175	200	230	260	310	370	440	540
250	280	320	360	420	500	600	700	860
400	440	500	560	660	780	920	1100	1350
630	700	800	900	1050	1 250	1 500	1 750	2 100

Raceways for bearings without inner and/or outer ring

In rolling bearings which do not have an inner and/or outer ring to provide a raceway, the rolling elements run directly on the shaft or in the housing bore.



The shaft and housing bore must be suitable for use as rolling bearing raceways.

The raceways must always be free from undulations and precision machined (grinding and honing). At a mean roughness $R_a > 0{,}2\ \mu m$, it is not possible to utilise the full load carrying capacity of the bearings.

The guidelines on shaft design in the product sections must also be observed.

The diameter tolerances of the shaft and housing determine the internal clearance.

Materials for raceways

Through hardening steels

Through hardening steels to ISO 683-17 (such as 100Cr6) are suitable as materials for rolling bearing raceways in direct bearing arrangements. These steels can also be surface layer hardened.

Case hardening steels

Case hardening steels must conform to ISO 683-17 (such as 17MnCr5, 16CrNiMo6) or EN 10 084 (such as 16MnCr5).

Flame or induction hardening

For flame and induction hardening, steels to ISO 683-17 (such as Cf54, 43CrMo4) or DIN 17 212 (such as Cf53) must be used.

Surface hardness and hardening depth

The values apply to raceways, axial washers and shaft shoulders. Steels hardened by means of case, flame or induction hardening must have a surface hardness of 670 HV + 170 HV and a sufficient hardening depth CHD or SHD.

In accordance with DIN 50 190, the hardening depth is the depth of the hardened surface zone at which there is still a hardness of 550 HV. It is measured on the finish ground shaft and must correspond to the stated values, but must in any case be ≧ 0,3 mm.

If the raceways are softer than 650 HV (58 HRC), the bearing arrangement will not achieve the full load carrying capacity. In this case, the basic dynamic load rating C_r and the basic static load rating C_{0r} must be reduced by the factor f_H, *Figure 16*.

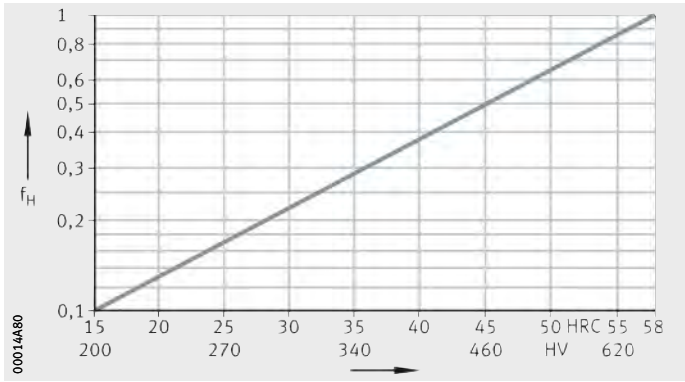

f_H = factor for taking account of raceway hardness
HRC, HV = surface hardness

Figure 16
Taking account of the raceway hardness

Hardness curves

The hardness curves are shown schematically, *Figure 17* and *Figure 18*. The required hardness curve is derived from the strain on the material.

The equations are based on hardness curves achieved with normal specialist heat treatment.

Case hardening:

$$CHD \geqq 0{,}078 \cdot D_w$$

Flame or induction hardening:

$$SHD \geqq 140 \cdot D_w / R_{p0,2}$$

CHD mm
Case hardening depth
SHD mm
Surface hardening depth
D_w mm
Rolling element diameter
$R_{p\,0,2}$ N/mm²
Proof stress.

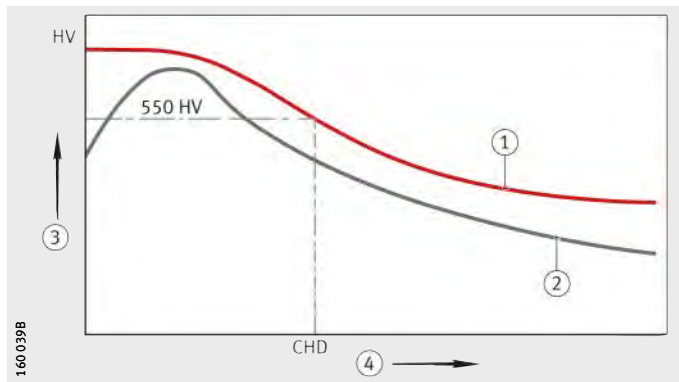

① Case hardening
② Required hardness
③ Hardness
④ Distance from surface
CHD = case hardening depth with hardness 550 HV

Figure 17
Case hardening depth CHD and hardness curve

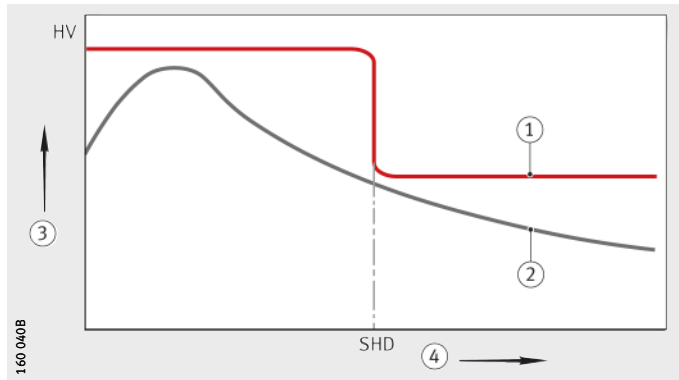

① Flame or induction hardening
② Required hardness
③ Hardness
④ Distance from surface
SHD = surface hardening depth

Figure 18
Surface hardening depth SHD and hardness curve

Axial location of bearings

Axial location of the bearing rings is matched to the specific bearing arrangement (locating bearing, non-locating bearing, adjusted and floating arrangements of bearings).

Examples: see *Figure 19*, page 156 to *Figure 25*, page 158.

Design guidelines

The bearing rings must be located by force locking or form fit in order to prevent lateral movement. The bearing rings must only be in contact with the shaft or housing shoulder, but not with the fillet.

Every radius of the mating part must be smaller than the smallest chamfer dimension r or r_1 of the bearing.

The radius should have rounding to DIN 5 418 or an undercut to DIN 509.

The shoulders on the mating parts must be large enough to provide a sufficiently wide contact surface even with the largest chamfer dimension of the bearing (DIN 5 418).

The bearing tables give the maximum values for the radius r_a or r_{a1} and the diameters of the abutment shoulders (D_a or d_a).

Any special characteristics of the individual bearing types, e.g. for cylindrical roller bearings, tapered roller bearings and axial bearings are indicated in the product sections.

Locating bearings

Locating bearings can support axial forces. The retaining element must be matched to these axial forces. Shoulders on the shaft and housing, snap rings, housing covers, shaft covers, nuts and spacer rings are suitable.

Non-locating bearings

Non-locating bearings only need to support slight axial forces occurring in thermal expansion. The axial location method only needs to prevent creep of the rings. A tight fit is often sufficient.

Self-retaining bearings

In non-separable bearings, one bearing ring requires a tight fit, while the other ring is retained by the rolling elements.

Deep groove ball bearings, double row angular contact ball bearings

Supported on both sides, inner and outer rings

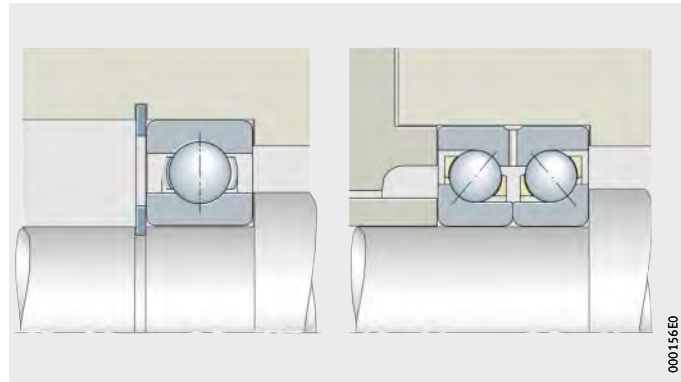

Figure 19
Locating bearings

Supported on both sides, inner ring

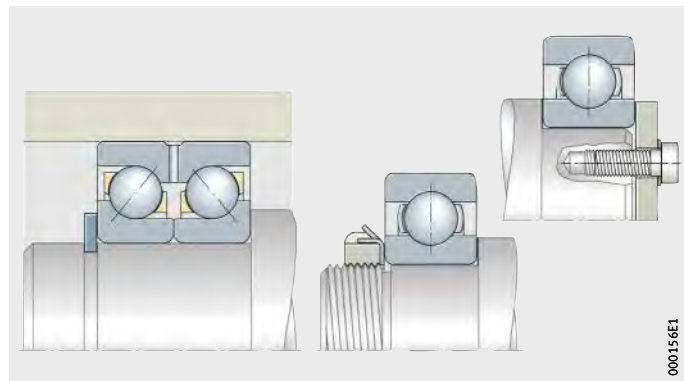

Figure 20
Non-locating bearings

Cylindrical roller bearings

The bearings must be supported on both sides on the inner and outer rings, *Figure 21* to *Figure 23*, page 157.

The ribs of axially loaded cylindrical roller bearings must be supported up to dimension d_1 or D_1.
Dimensions d_1, D_1: see dimension tables.

For semi-locating bearings, the bearing rib only requires support on one side, on the rib supporting the axial load.

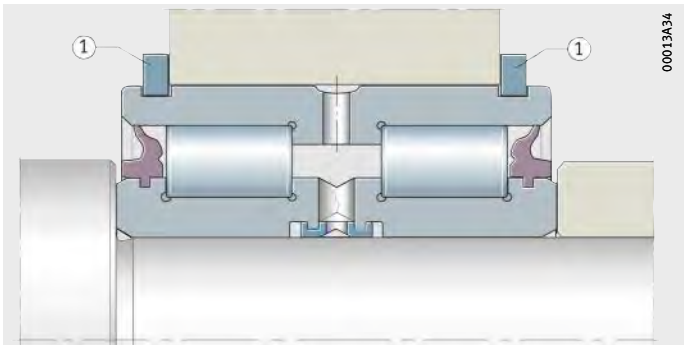

Outer ring axially located by retaining rings
① Retaining rings

Figure 21
Locating bearing

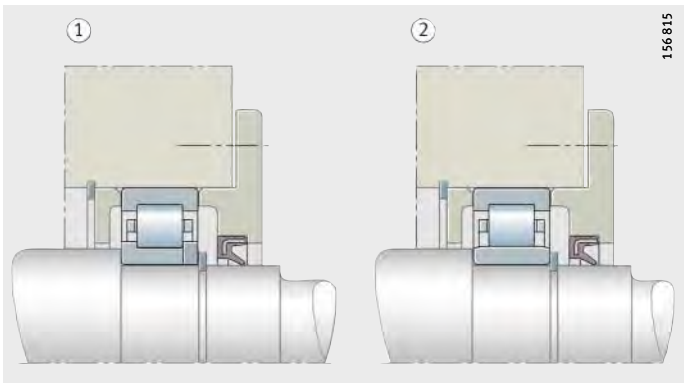

Axial location by form fit
① Locating bearing
② Non-locating bearing

Figure 22
Locating and non-locating bearings

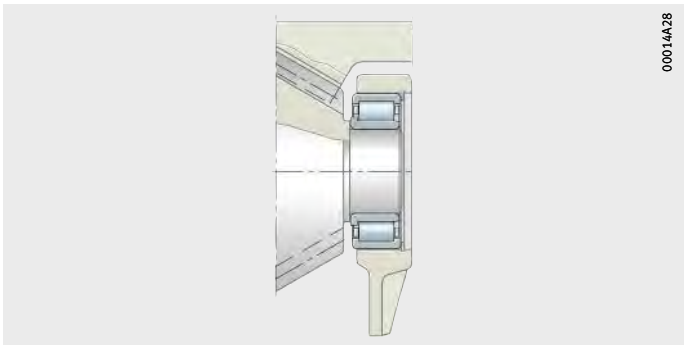

The inner ring rib prevents axial creep to one side

Figure 23
Non-locating bearing

Adjusted and floating bearing arrangements

Since bearings in adjusted and floating arrangements support axial forces in one direction only, the bearing rings only need to be supported on one side. Counterguidance is performed by a second, symmetrically arranged bearing, *Figure 24* and *Figure 25*.
Shaft nuts, ring nuts, covers or spacer washers are suitable as adjustment elements.

In floating bearing arrangements, lateral movement of the rings is prevented by shaft or housing shoulders, covers, snap rings, *Figure 25*.

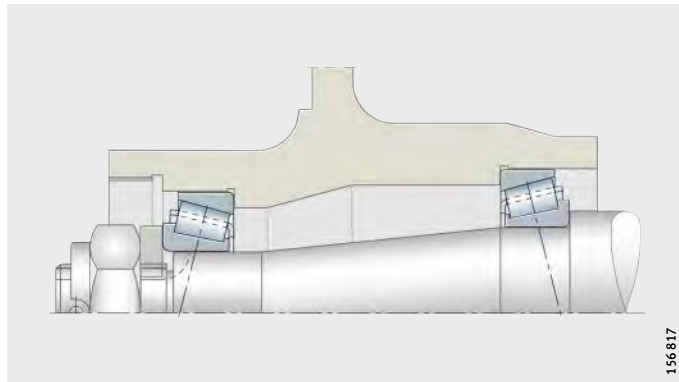

Axial location

Figure 24
Adjusted bearing arrangement

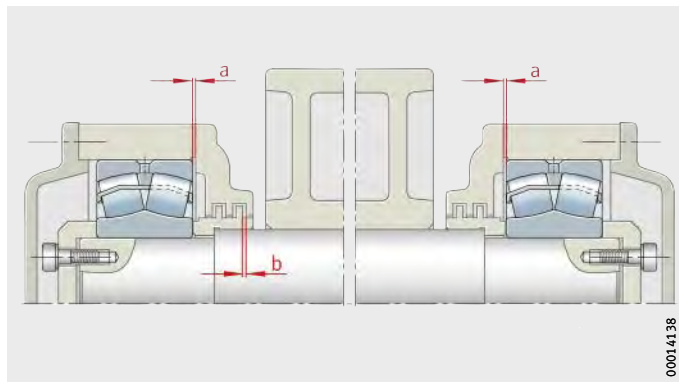

Axial location

a = guidance clearance;
a < b (b = axial labyrinth gap)

Figure 25
Floating bearing arrangement

Seals

The sealing arrangement has a considerable influence on the operating life of a bearing arrangement. It is intended to retain the lubricant in the bearing and prevent the ingress of contaminants into the bearing.

Contaminants may have various effects:

- A large quantity of very small, abrasive particles causes wear in the bearing. The increase in clearance or noise brings the operating life of the bearing to an end.
- Large, overrolled hard particles reduce the fatigue life since pittings occur at the indentation points under high bearing loads.

A basic distinction is made between contact and non-contact seals in the adjacent construction and the bearing.

Non-contact seals in the adjacent construction

With non-contact seals, only lubricant friction occurs in the lubrication gap. The seals do not undergo wear and remain capable of operation for a long period. Since they generate no heat, non-contact seals are also suitable for very high speeds.

Gap seals

A simple design, although adequate in many cases, is a narrow seal gap between the shaft and housing, *Figure 26*.

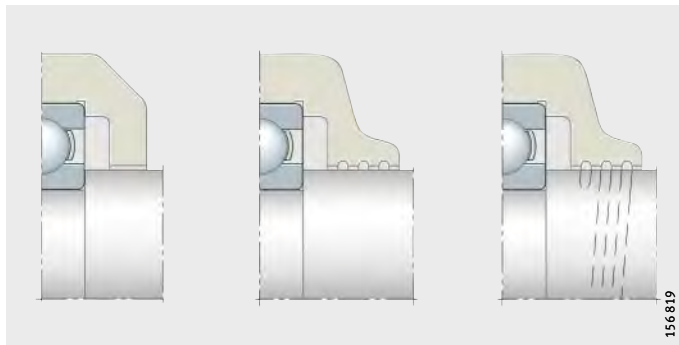

Figure 26
Simple gap seals

Labyrinth seals

A considerably greater sealing effect than with gap seals is achieved by labyrinths incorporating gaps filled with grease, *Figure 27*.

In contaminated environments, grease should be pressed from the interior into the seal gap at short intervals.

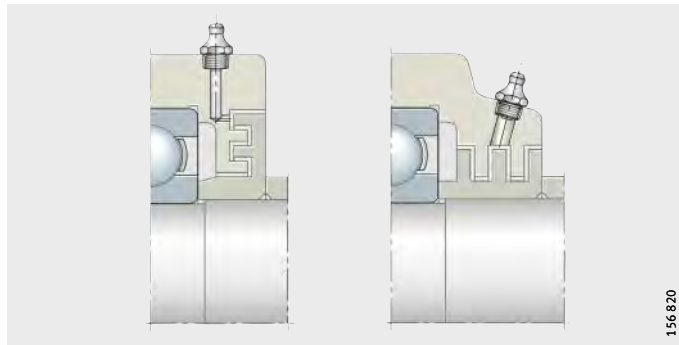

Figure 27
Labyrinth seals

Splash ring

Where oil lubrication is used with a horizontal shaft, splash rings are suitable for preventing the escape of oil, *Figure 28*.

The oil outlet hole on the underside of the seal location must be sufficiently large that it cannot be clogged by contamination.

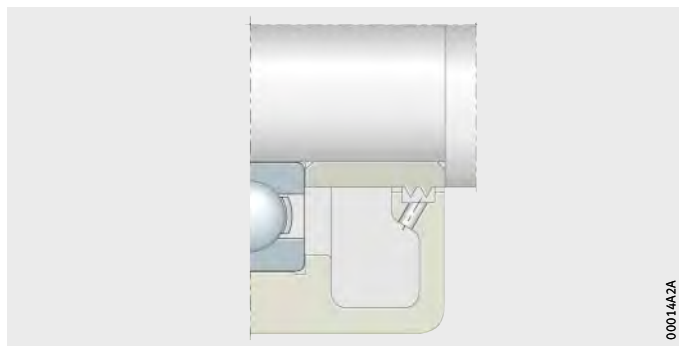

Figure 28
Splash ring

Flinger shields

Co-rotating flinger shields have the effect of shielding the seal gap from heavy contamination, *Figure 29*.

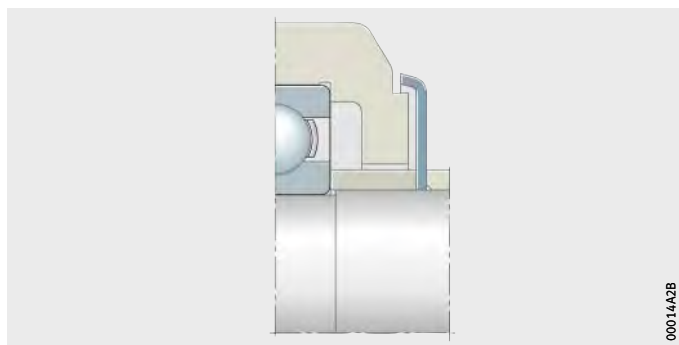

Figure 29
Flinger shield

Baffle plates

Stationary (rigid) baffle plates ensure that grease remains in the area around the bearing, *Figure 30*.

The grease collar that forms at the seal gap protects the bearing against contamination.

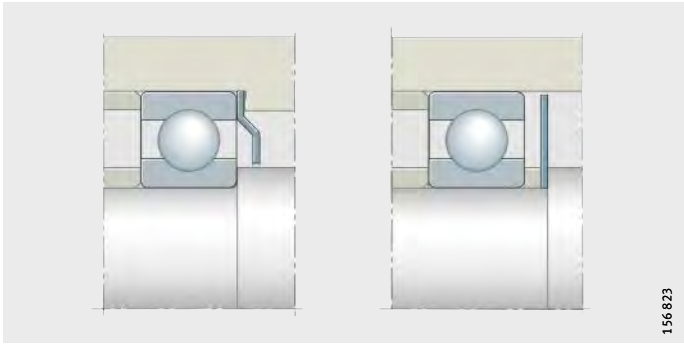

Figure 30
Rigid baffle plates

Lamellar rings

Lamellar rings made from steel and radially sprung either outwards or inwards require little mounting space, *Figure 31*.
They give protection against loss of grease and ingress of dust and are also used as an outer seal against spray water.

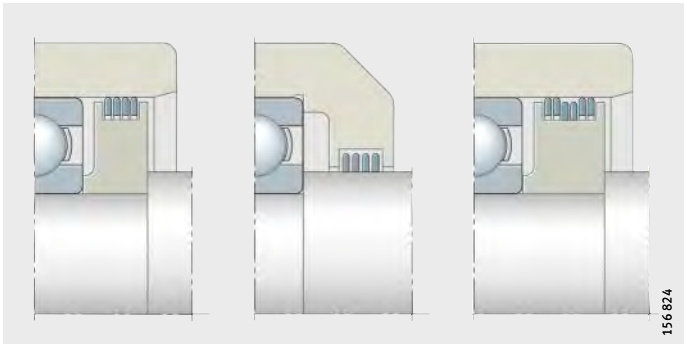

Figure 31
Lamellar rings

Non-contact seals in the bearing

Sealing shields in the bearing

Sealing shields are compact sealing elements fitted on one or both sides of the bearing.

Bearings with sealing shields on both sides are supplied with a grease filling.

We supply large bearings fitted with sealing shields by agreement only.

Contact seals in the adjacent construction

Contact seals are normally in contact with the running surface under radial contact force. The contact force should be kept small to avoid an excessive increase in frictional torque and temperature.
The frictional torque and temperature as well as the wear of the seal are also affected by the lubrication condition at the running surface, its roughness and the sliding velocity.

With grease lubrication

Felt rings and felt strips are sealing elements that have proved very effective with grease lubrication, *Figure 32*. They are impregnated with oil before mounting and give particularly good sealing against dust. In unfavourable environmental conditions, two felt rings are arranged adjacent to each other. Felt rings and annular slots are standardised according to DIN 5 419.

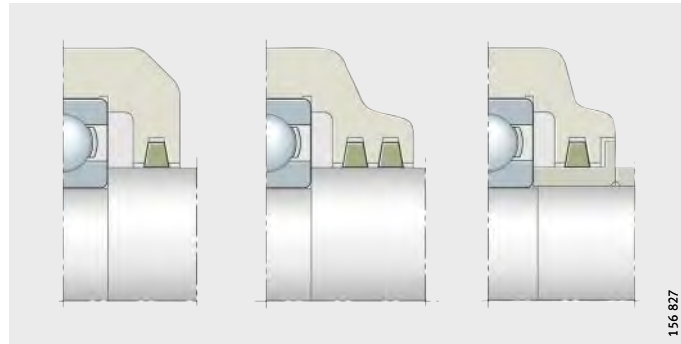

Figure 32
Felt rings or felt strips

With oil lubrication

If oil lubrication is used, sealing is primarily carried out with rotary shaft seals to DIN 3 760 und DIN 3 761, *Figure 33*. The seal collar with one lip is pressed against the shaft running surface by a spring.

If the principal objective is to prevent escape of lubricant, the lip is arranged on the inner side of the bearing arrangement. A sealing ring with an additional protective lip also prevents the ingress of contamination. Seal lips made from nitrile butadiene rubber (NBR) are suitable, when used with oil lubrication, for circumferential speeds at the running surface of up to 12 m/s.

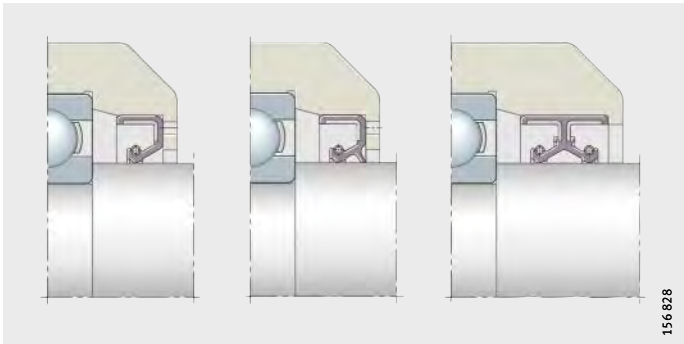

Figure 33
Rotary shaft seals

Lip seal with axial sealing action

The V ring, *Figure 34*, is a lip seal with axial sealing action. During mounting, this single piece rubber ring is pushed under tension along the shaft until its lip is in axial contact with the housing wall. The seal lip acts simultaneously as a flinger shield.

Axial lip seals are unaffected by radial misalignment and slight skewing of the shaft.

Rotating V rings are suitable, when used with grease lubrication, for circumferential speeds of up to 12 m/s, while stationary V rings are suitable for up to 20 m/s. At circumferential speeds over 8 m/s, the V ring must be axially supported; at speeds of 12 m/s or more it must also be radially clamped.

V rings are frequently used as outer seals in order to keep contamination away from a rotary shaft seal.

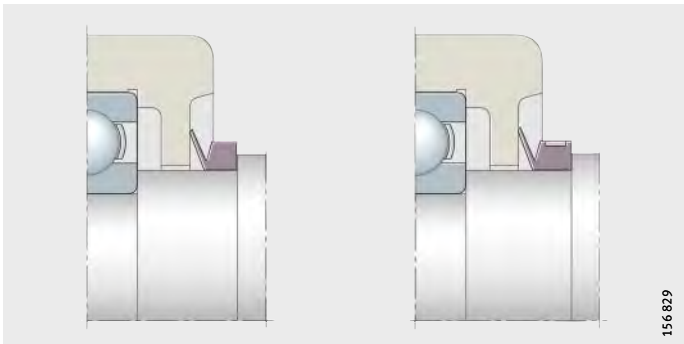

Figure 34
V ring

Axial spring seals

When using grease lubrication, effective sealing can also be achieved by means of axial spring seals, *Figure 35*.
The thin sheet metal washers are clamped to the end face of the inner ring or outer ring and are axially sprung against the other bearing ring.

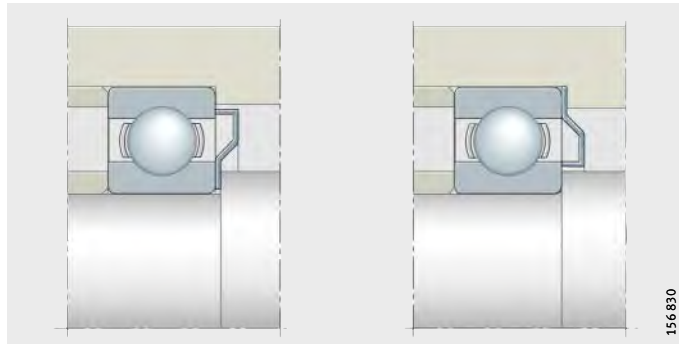

Figure 35
Spring seals

Contact seals in the bearing

Sealing washers

Work roll bearing arrangements in hot or cold rolling lines must be effectively sealed against large quantities of water or roll coolant that are mixed with contaminants. These bearing arrangements are normally lubricated with grease. For cost and environmental reasons, it is desirable to achieve low levels of grease consumption. Four-row tapered roller bearings with integrated seals have therefore been developed, *Figure 36*. These bearings have main dimensions identical to those of the unsealed bearings.
Only small quantities of the high quality rolling bearing grease used are required. Although the basic load ratings of the sealed bearings are lower, they normally have a longer life than the open bearings due to the improved cleanliness in the lubrication gap.

The rotary shaft seals on the sealed bearings are made from fluoro elastomer, which can give off gases and vapours harmful to health at approx. +300 °C or higher. This may occur, for example, if a welding torch is used in the dismounting of the bearings.
If high temperatures are unavoidable, attention must be paid to the valid safety data sheet for the material.

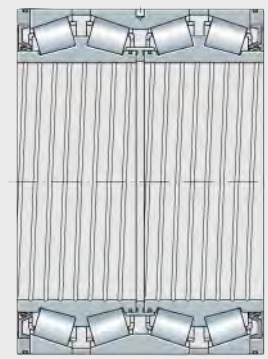

Figure 36
Sealing washers on both sides

Handling

Rolling bearings, rolling bearing parts and Arcanol rolling bearing greases are high quality goods and must therefore be handled with care.

Storage of rolling bearings

The performance capability of modern rolling bearings lies at the boundaries of what is technically achievable. The materials, dimensional and geometrical tolerances, surface quality and lubrication have been optimised for maximum levels of function, which means that even slight deviations in functional areas, such as those caused by corrosion, can impair the performance capacity. In order to realise the full performance capability of rolling bearings, it is essential to match the anti-corrosion protection, packaging, storage and handling to each other.

Corrosion protection and packaging constitute part of the bearing and are optimised such that they preserve all characteristics of the product at the same time as far as possible.
In addition to protecting the surface against corrosion, this includes emergency running lubrication, friction, lubricant compatibility, noise behaviour, resistance to ageing and compatibility with rolling bearing components (cage and seal material).

Storage conditions for rolling bearings



As a basic prerequisite, parts must be stored in a closed storage area which cannot be affected by any aggressive media, such as exhaust gases from vehicles or gases, mist or aerosols of acids, lyes or salts. Direct sunlight should be avoided since, apart from the harmful effects of UV radiation, it can lead to wide temperature fluctuations in the packaging. The temperature should be constant and air humidity should be as low as possible. Jumps in temperature and increased humidity lead to condensation.

The following conditions must be fulfilled:

- frost-free storage, i.e. at a temperature $>$ +5 °C
  (to prevent formation of white frost, a limit of +2 °C is permissible for a maximum of 12 hours per day)
- maximum temperature +40 °C
  (to prevent excessive drainage of anti-corrosion oils)
- relative humidity $<$ 65%
  (if changes in temperature occur, a limit of 70% is permissible for up to 12 hours per day).

The temperature and humidity must be continuously monitored. This can be carried out using a datalogger. The measurements must be taken at intervals of no more than 2 hours.

At least 2 measurement points must be selected: the highest point and the lowest point in the vicinity of an external wall at which the goods can be stored.

Larger bearings with rings of relatively small thickness should not be stored standing but lying flat and supported over their whole circumference.

Storage periods for rolling bearings

Rolling bearings should not be stored for longer than 3 years. This applies both to open and to greased bearings with sealing shields or washers. In particular, specifically greased rolling bearings should not be stored for too long, since the chemical-physical behaviour of greases may change during storage. Even if the minimum performance capacity remains, the safety reserves of the grease may have diminished.

In general, rolling bearings can be used even after their permissible storage period has been exceeded if the storage conditions during storage and transport were observed.
If the conditions are not fulfilled, shorter storage periods must be anticipated. If the periods are exceeded, it is recommended that the bearing should be checked for corrosion, the condition of the anti-corrosion oil and the condition of the grease before it is used.

Storage of Arcanol rolling bearing greases

The information on storage of rolling bearings apply as appropriate to Arcanol rolling bearing greases. The precondition is that the grease is stored in closed, completely filled original containers.

Storage periods for Arcanol rolling bearing greases

Rolling bearing greases are mixtures of oil, thickener and additives. Such mixtures of liquid and solid substances do not have unlimited stability. During storage, their chemical-physical characteristics may change and they should therefore be used up as soon as possible.

If the storage conditions are observed, Arcanol lubricating greases can be stored without loss of performance for 3 years. As in the case of rolling bearings, however, the permissible storage period should not be seen as a rigid limit.

If storage is carried out as prescribed, most greases can be used even after 3 years, if allowances are made for small changes.
If there is any doubt when using older greases, random sample checking of chemical-physical characteristics is recommended in order to determine any changes in the grease.
It is therefore not possible to state storage periods for containers that have been opened. If containers are to be stored after opening, the grease surface should always be brushed flat, the container should be sealed airtight and it should be stored such that the empty space is upwards. High temperatures should be avoided in all cases.

Unpacking of rolling bearings

Perspiration leads to corrosion. Hands should be kept clean and dry and protective gloves worn if necessary. Bearings should only be removed from their original packaging immediately before mounting. If bearings are removed from multi-item packaging with dry preservation, the package must be closed again immediately, since the protective vapour phase is only effective in closed packaging. Bearings should be oiled or greased immediately after unpacking.

Compatibility, miscibility

The anti-corrosion agents in bearings with an oil-based preservative are compatible and miscible with oils and greases having a mineral oil base. Compatibility should be checked if synthetic lubricants or thickeners other than lithium or lithium complex soaps are used. If there is an incompatibility, the anti-corrosion oil should be washed out before greasing, especially in the case of lubricants with a PTFE/alkoxyfluoroether base and thickeners based on polycarbamide. Bearings should be washed out if the lubricant is changed or the bearings are contaminated.
If in doubt, please contact the relevant lubricant manufacturer.

Cleaning of rolling bearings

The following are suitable for degreasing and washing of rolling bearings:

- aqueous neutral, acid or alkaline cleaning agents.
  Check the compatibility of alkaline agents with aluminium components before cleaning
- organic cleaning agents such as paraffin oil free from water and acid, petroleum ether (not petrol), spirit, dewatering fluids, freon 12 substitutes, cleaning agents containing chlorinated hydrocarbons.

Cleaning should be carried out using brushes, paint brushes or lint-free cloths. In the case of resinous oil or grease residues, precleaning by mechanical means followed by treatment with an aqueous, strongly alkaline cleaning agent is recommended.



Legal regulations relating to handling, environmental protection and health and safety at work must be complied with. The specifications of the cleaning agent manufacturer must be observed.

Paraffin oil, petroleum ether, spirit and dewatering fluids are flammable, alkaline agents are corrosive. The use of chlorinated hydrocarbons is associated with the risk of fire, explosion and decomposition as well as with health hazards.
These hazards and appropriate protective measures are described comprehensively in Datasheet ZH1/425 of the Hauptverband der gewerblichen Berufsgenossenschaften (German Federation of Institutions for Statutory Accident Insurance and Prevention).

After cleaning, rolling bearings must be dried and preservative applied immediately (risk of corrosion).

Mounting

Comprehensive information on mounting and dismounting is given in the publications WL 80100, Mounting of Rolling Bearings and IS 1, Mounting and Maintenance of Rolling Bearings.

For more extensive work, a mounting manual should be available that precisely describes all relevant work.
The manual should also contain details on means of transport, mounting equipment, measurement tools, type and quantity of lubricant and a precise description of the mounting procedure.

Guidelines for mounting



The following guidelines must always be taken into account:

- The assembly area must be kept clean and free from dust.
- Protect bearings from dust, contaminants and moisture. Contaminants have a detrimental influence on the running and operating life of rolling bearings.
- Before mounting work is started, familiarise yourself with the design by means of the final assembly drawing.
- Before mounting, check whether the bearing presented for mounting corresponds to the data in the drawing.
- Check the housing bore and shaft seat for dimensional and geometrical accuracy and cleanliness.
- Check that the shaft and housing bore have a lead chamfer of 10° to 15°.
- Wipe away any anti-corrosion agent from the seating and contact surfaces, wash anti-corrosion agent out of tapered bores.
- Lightly oil or rub solid lubricant into the bearing ring seating surfaces.
- Do not cool the bearings excessively.
  Moisture due to condensation can lead to corrosion in the bearings and bearing seats.
- After mounting, provide the rolling bearings with lubricant.
- Check the correct functioning of the bearing arrangement.

Mounting of rolling bearings with cylindrical seats

Avoid applying direct blows to the bearing rings with a hammer.

Non-separable bearings

In non-separable bearings, apply the mounting forces to the ring with a tight fit, which should also be mounted first, *Figure 1*.

If the inner ring of a non-separable bearing will have a tight fit, press the bearing onto the shaft first, *Figure 1*. The bearing together with the shaft is then pushed into the housing (fit clearance).

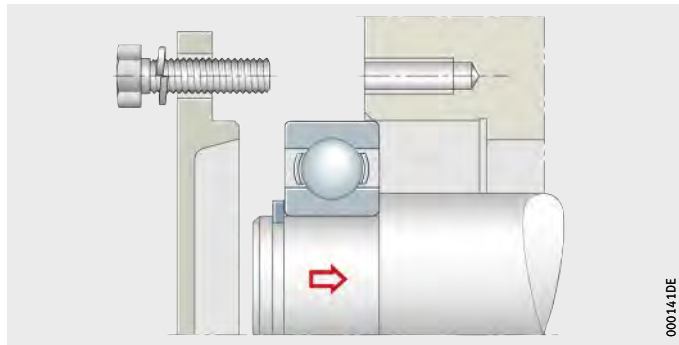

Tight fit of the inner ring, mounting this ring first

Figure 1
Non-separable bearing

Separable bearings

In separable bearings, mounting is easier; both rings can be mounted individually, *Figure 2*. Rotating the ring during mounting to give a screwdriver effect will help to avoid scraping marks.

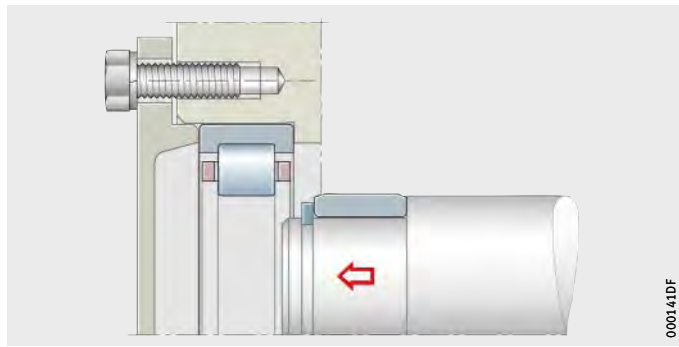

Tight fit of the inner ring, individual mounting of rings

Figure 2
Separable bearing

Heating of bearings

Bearings with a cylindrical bore should be heated before mounting if a tight fit on the shaft is intended and excessive effort is required for pressing by mechanical means. The temperature required for mounting is shown in *Figure 3*. The data are valid for maximum fit interference, a room temperature of +20 °C and an excess temperature safety margin of 30 K.

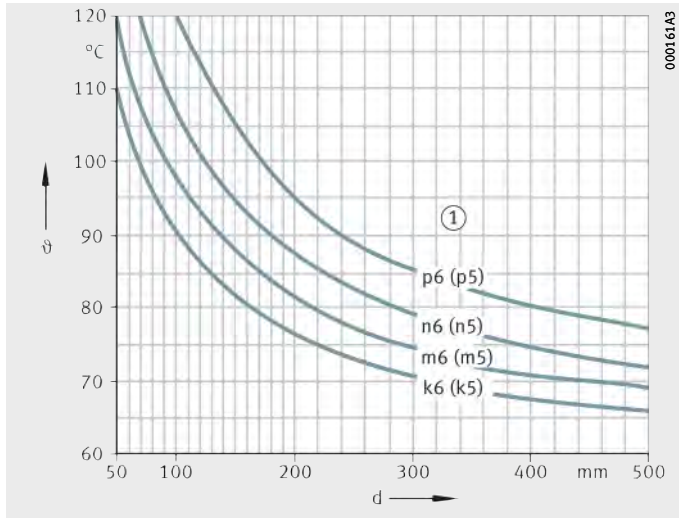

ϑ = heating temperature
d = bearing bore diameter
① Shaft tolerance

Figure 3
Heating temperature

Induction heating devices

Induction heating devices give rapid, safe and clean heating. The devices are used mainly in volume mounting work.

Oil bath

With the exception of sealed, greased bearings and high precision bearings, rolling bearings of all sizes and types can be heated in an oil bath. A thermostatic controller is advisable (temperature +80 °C to +100 °C). In order that the bearings are heated uniformly, they should be laid on a grid or suspended in the oil bath.

With this method, please note the risk of accidents, environmental pollution by oil vapour, flammability of hot oil and risk of bearing contamination.

Mounting of rolling bearings with tapered bore

Bearings with a tapered bore are mounted either directly on the tapered shaft seat or by means of an adapter sleeve or withdrawal sleeve on a cylindrical shaft, *Figure 4* ①, ②, ③.

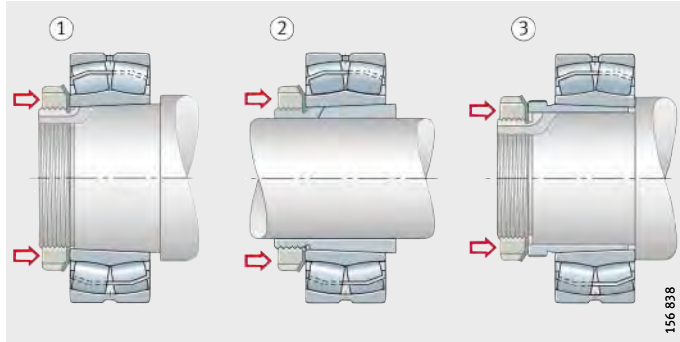

① Mounting using a locknut
② Mounting on an adapter sleeve using the adapter sleeve nut
③ Mounting on a withdrawal sleeve using a locknut

Figure 4
Mounting of rolling bearings with a tapered bore

Reduction in radial internal clearance

The reduction in radial internal clearance as a result of inner ring expansion is used as a means of checking the tight fit.
In spherical roller bearings, the radial internal clearance (s_r) must be measured simultaneously over both rows of rollers, *Figure 5*. Alternatively, the axial displacement is measured.

For values for the reduction in radial internal clearance and the displacement in spherical roller bearings, see section Spherical roller bearings, page 624 and page 625.

For the measurement of radial internal clearance, aids such as feeler gauges FEELER-GAUGE-100 and FEELER-GAUGE-300 are suitable.

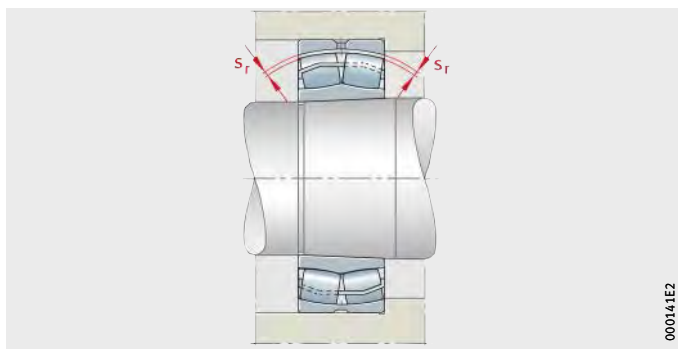

Spherical roller bearings
s_r = radial internal clearance

Figure 5
Radial internal clearance

Mounting using pressure screws or hydraulic tool

Even in the case of medium sized bearings, the forces required to tighten nuts are considerable. In such cases, mounting can be made easier by using locknuts with pressure screws, *Figure 6* ①. This method is not suitable for spherical roller bearings of E1 design.

For the mounting of large bearings, a hydraulic device should be used to drive up the product or press in the sleeve, *Figure 6* ②. Hydraulic nuts are available for all common threaded sleeves and shafts.

Hydraulic method

The hydraulic method gives considerable assistance in the mounting and particularly in the dismounting of bearings of approx. d = 160 mm and above.

For mounting, an oil with a viscosity of 75 mm^2/s at +20 °C (nominal viscosity 32 mm^2/s at +40 °C) is recommended.

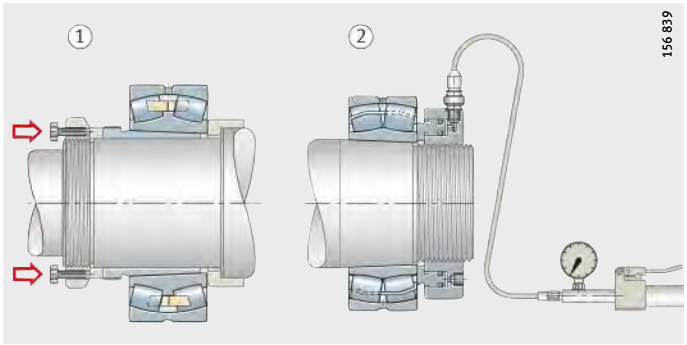

① Mounting on withdrawal sleeve using locknut and pressure screws
② Mounting on tapered shaft using hydraulic nut

Figure 6
Mounting of rolling bearings with a tapered bore

Guidelines for dismounting

Information on mounting and dismounting is given in the publications WL 80100, Mounting of Rolling Bearings and IS 1, Mounting and Maintenance of Rolling Bearings.

Dismounting should be taken into consideration in the original design of the bearing position. If bearing rings are to be mounted with a tight fit, slots should be provided in the shaft or housing bore, for example, to allow removal of the rings.

If the bearing is to be reused, the following guidelines should be taken into consideration:

- Do not use a concentrated or hard flame.
- Avoid direct blows on the bearing rings.
- Do not apply dismounting forces through the rolling elements.
- Clean the bearings carefully after dismounting.

Dismounting of rolling bearings on cylindrical seats

If the bearings and adjacent parts are to be reused, the removal tool should be applied to the ring mounted with a tight fit.
In non-separable bearings, the ring mounted with a sliding fit is dismounted first and the ring with a tight fit is then removed.

Removal of inner rings using an induction device

Induction heating devices are used to remove the shrink-mounted inner rings of cylindrical roller bearings, *Figure 7*.

Heating is achieved quickly and the rings are loosened easily without the transfer of substantial heat to the shaft.



Figure 7
Induction heating device

Heating rings

Heating rings made from light metal with radial slots can be used to dismount the inner rings of cylindrical roller bearings that have no ribs or only one rigid rib, *Figure 8*. The rings are heated on an electric heating plate to between +200 °C and +300 °C, pushed over the bearing ring to be removed and clamped in place using the grips. Once the press fit on the shaft has been eliminated, both rings are removed together.

The bearing ring must be removed from the heating ring immediately after dismounting in order to prevent overheating.

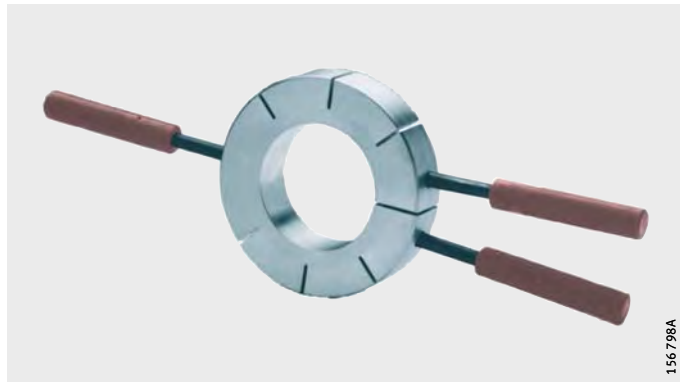

Figure 8
Heating ring

Dismounting of rolling bearings with tapered bore

Mechanical dismounting

Where bearings are mounted directly on a tapered shaft seat or on an adapter sleeve, the locking device on the shaft or adapter sleeve nut must be loosened first. The nut is then unscrewed by the amount of the displacement. The inner ring is then driven off the sleeve or shaft.

Dismounting of large bearings located using a withdrawal sleeve requires considerable force. In this case, locknuts with additional pressure screws can be used, *Figure 9* ①. A disc must be inserted between the inner ring and the pressure screws.

Hydraulic dismounting

An easier and more economical method is the dismounting of withdrawal sleeves using hydraulic nuts, *Figure 9* ②. The protruding withdrawal sleeve is supported by a heavy-section ring.

The dismounting of large bearings can be made easier by using the hydraulic method, *Figure 9* ③ and *Figure 10*. Oil is pressed between the fit surfaces. The adjacent parts can then be moved in relation to each other by applying only slight force and without the risk of surface damage.

Tapered shafts must be provided with appropriate oil slots and feed holes. Oil injectors are sufficient to generate the pressure. The arrangement of oil ducts in the hydraulic method for dismounting of a spherical roller bearing from a tapered shaft seat is shown in *Figure 10*.

The withdrawal sleeve becomes loose abruptly. Leave the nut on the shaft.

Large adapter and withdrawal sleeves already have the appropriate slots and holes. In this case, a pump must be used to generate the oil pressure required.

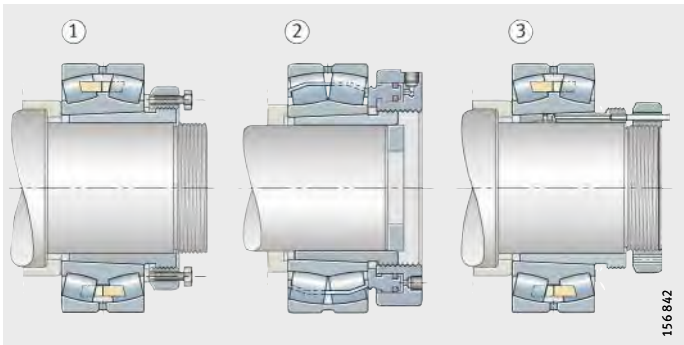

Dismounting of a withdrawal sleeve:
① Using a nut and pressure screws
② Using a hydraulic nut

Dismounting of a spherical roller bearing from the withdrawal sleeve:
③ Using the hydraulic method

Figure 9
Dismounting of a withdrawal sleeve and spherical roller bearing

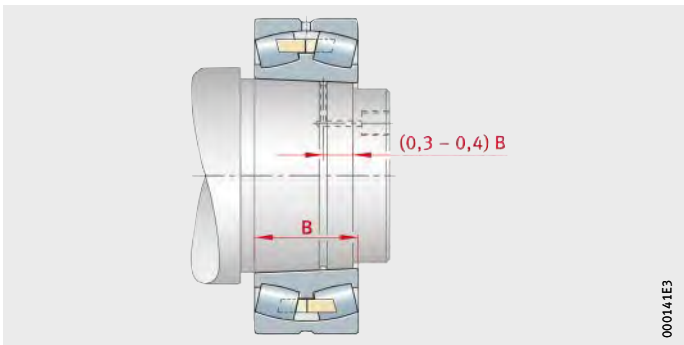

B = bearing width

Figure 10
Oil ducts for dismounting a spherical roller bearing

Suitable oils

For dismounting, oils with a viscosity of approx. 150 mm^2/s at +20 °C (nominal viscosity 46 mm^2/s at +40 °C) are used.

Fretting corrosion can be dissolved by rust-dissolving additives in the oil.

Disposal of bearings after dismounting

If the bearings are not to be reused after dismounting, the products should be separated into their constituent parts. Grease, seals and plastic parts should be disposed of in accordance with the relevant waste product guidelines. Bearing rings and rolling elements should be sent for recycling.



FAG

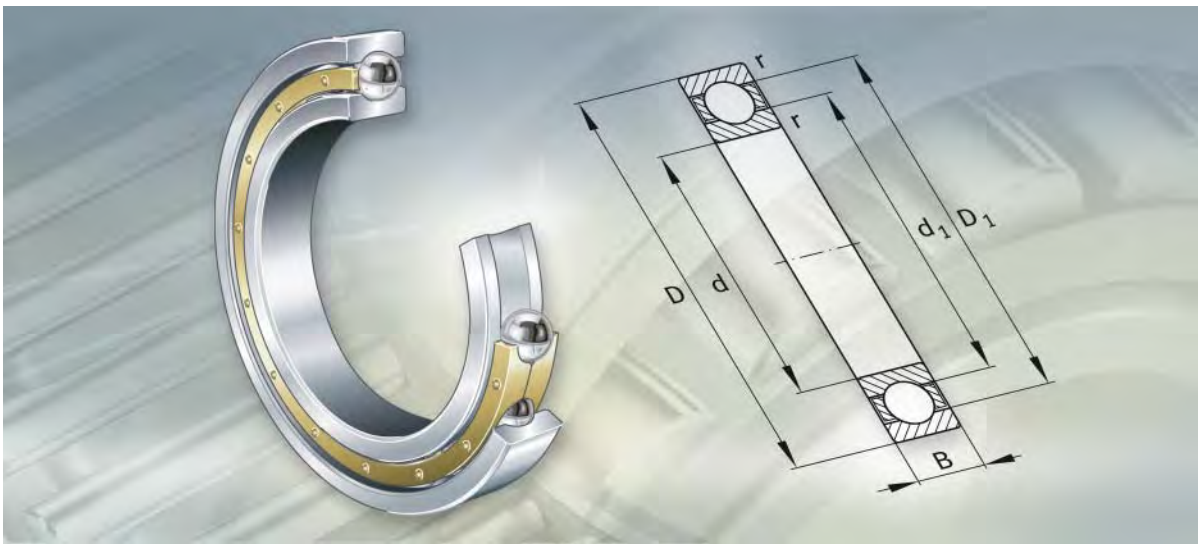

Deep groove ball bearings

Single row

Deep groove ball bearings



		Page
Product overview	Deep groove ball bearings	180
Features	Radial and axial load capacity	181
	Compensation of angular misalignments	181
	Bearings with retaining slot	182
	Hybrid deep groove ball bearings	182
	Matched single row deep groove ball bearings	182
	Sealing	183
	Lubrication	183
	Operating temperature	183
	Cages	183
	Suffixes	183
Design and safety guidelines	Equivalent dynamic bearing load	184
	Equivalent static bearing load	185
	Axial load carrying capacity	185
	Minimum radial load	185
	Design of bearing arrangements	185
Accuracy		186
	Radial internal clearance of bearings with cylindrical bore	187
Dimension tables	Deep groove ball bearings, single row	188

Single row

With and without retaining slot

160, 60, 62, 63, 608, 618, 609, 619, Z-5..KL1, F-8..KL1



Z-5..KL1-N1, F-8..KL1-N1

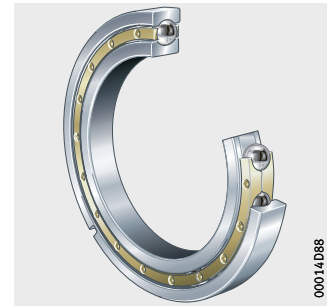

Hybrid deep groove ball bearings

F-HC8..KL1



Deep groove ball bearings



Features

Deep groove ball bearings are versatile, self-retaining bearings with solid outer rings, inner rings and ball and cage assemblies.

Single row deep groove ball bearings are of a simple design, robust in operation and easy to maintain.

Due to their low frictional torque, deep groove ball bearings are suitable for high speeds.

Deep groove ball bearings with standardised main dimensions and standardised designations (DIN 625-1) are used, for example, in gearboxes, electric motors, converter drive units and roll stands.

Deep groove ball bearings with non-standardised designations (Z-5..KL, F-8..KL) are used, for example, as axial bearings in roll stands.
Their section height is normally matched to the associated radial bearing.

Hybrid deep groove ball bearings with ceramic balls and steel bearing rings are special bearings for spreader rolls in paper machinery. These are indicated by the designation F-HC8..KL, see section Hybrid deep groove ball bearings, page 182.

Radial and axial load carrying capacity

Due to the raceway geometry and the balls, deep groove ball bearings can support axial loads in both directions as well as radial loads, see section Axial load carrying capacity, page 185.

Compensation of angular misalignments

The angular adjustment facility of single row deep groove ball bearings is limited, so the bearing positions must be well aligned.

Misalignments can lead to unfavourable ball running and induce additional loads in the bearing that shorten the operating life.

In order to keep these loads at a low level, only small adjustment angles are permissible (dependent on the load) for single row deep groove ball bearings, see table.

Load and adjustment angle for single row deep groove ball bearings

Series	Adjustment angle	
	Low loads	High loads
62, 622, 63, 623, 64	5′ – 10′	8′ – 16′
618, 619, 160, 60	2′ – 6′	5′ – 10′

Deep groove ball bearings

Bearings with retaining slot

Deep groove ball bearings with a retaining slot in the outer ring can be easily secured in a circumferential direction. Special bearings that already have a retaining slot are indicated in the dimension table. By agreement, bearings with standardised main dimensions are also available with a retaining slot in the outer ring.
These bearings have the suffix N1.

Hybrid deep groove ball bearings

A special design of deep groove ball bearing is used in high speed spreader rolls in paper machinery. These hybrid bearings with the designation F-HC8..KL have steel bearing rings and ceramic balls. Since the number of balls is reduced in this case, the risk of slippage is significantly lower. Further information on these bearings is given in TPI WL 13-4, Hybrid Deep Groove Ball Bearings for Spreader Rolls.

Matched single row deep groove ball bearings

By agreement, deep groove ball bearings of series 160, 60, 62, 63, 64 and 618 are available in different arrangements as matched pairs of bearings, *Figure 1*.

Sets in an O arrangement (suffix DB) can support axial loads in both directions as well as tilting moments.

Sets in an X arrangement (suffix DF) can support axial loads in both directions but are not suitable for tilting moments.

For high axial loads in one direction, pairs of bearings in a tandem arrangement are suitable (suffix DT).

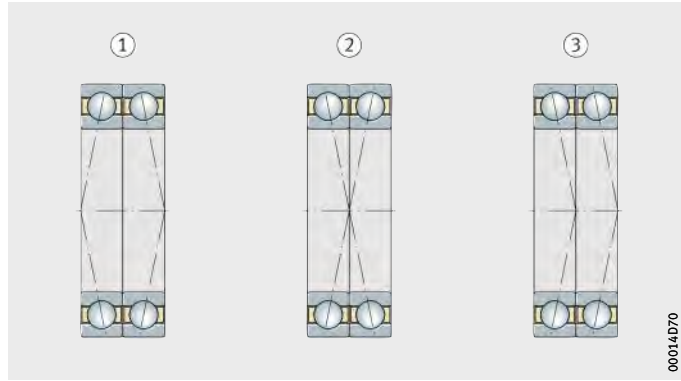

① O arrangement, DB
② X arrangement, DF
③ Tandem arrangement, DT

Figure 1
Matched sets



Sealing

Single row deep groove ball bearings are not sealed.

Lubrication

The bearings can be lubricated with grease or oil.

Operating temperature

Deep groove ball bearings without seals can be used up to an operating temperature of +120 °C.
For applications at temperatures above +120 °C, please contact us.
Bearings with a diameter D of more than 240 mm are dimensionally stable up to +200 °C.

Cages

Single row deep groove ball bearings without a cage suffix have a sheet steel cage.

Deep groove ball bearings with ball-guided solid brass cages are indicated by the suffix M.

The suffix MA indicates bearings with a solid brass cage guided on the outer ring.

Cages guided on the inner ring are indicated by the suffix MB.

Suffixes

Suffixes for available designs: see table.

Available designs

Suffix[1)]	Description	Design
C3	Radial internal clearance larger than normal	Standard
M	Solid brass cage, ball-guided	
MB	Solid brass cage, guided on inner ring	
DB	Two deep groove ball bearings in O arrangement, matched clearance-free	Special design, available by agreement only
DF	Two deep groove ball bearings in X arrangement, matched clearance-free	
DT	Two deep groove ball bearings in tandem arrangement, matched clearance-free	
MA	Solid brass cage, guided on outer ring	
N1	One retaining slot in outer ring (for securing in circumferential direction)	
P6	Tolerance class P6	

1) In the case of deep groove ball bearings with non-standardised designations, the design (for example radial internal clearance, cage, accuracy) is specified in the designation (Z-5 or F-8).
In the case of these bearings, additional suffixes are only used for deviations from the original design.

Design and safety guidelines

Equivalent dynamic bearing load

The equivalent dynamic load P is valid for bearings that are subjected to radial and axial dynamic loads. It gives the same rating life as the combined bearing load occurring in practice.

For bearings under dynamic loading, the following applies:

Load ratio and equivalent dynamic load

Load ratio	Equivalent dynamic bearing load
$\frac{F_a}{F_r} \leqq e$	$P = F_r$
$\frac{F_a}{F_r} > e$	$P = X \cdot F_r + Y \cdot F_a$

P kN
Equivalent dynamic bearing load for combined load
F_a kN
Axial dynamic bearing load
F_r kN
Radial dynamic bearing load
e, X, Y –
Factors, see table Factors e, X and Y.

The factors e, X and Y required for determining P are dependent on the ratio $f_0 \cdot F_a/C_{0r}$ and the radial internal clearance.
The values in the table are valid for normal fits.

- Shaft machined to j5 or k5, housing machined to J6.

Factors e, X and Y

$\frac{f_0 \cdot F_a}{C_{0r}}$	Factor for radial internal clearance								
	CN			C3			C4		
	e	X	Y	e	X	Y	e	X	Y
0,3	0,22	0,56	2	0,32	0,46	1,7	0,4	0,44	1,4
0,5	0,24	0,56	1,8	0,35	0,46	1,56	0,43	0,44	1,31
0,9	0,28	0,56	1,58	0,39	0,46	1,41	0,45	0,44	1,23
1,6	0,32	0,56	1,4	0,43	0,46	1,27	0,48	0,44	1,16
3	0,36	0,56	1,2	0,48	0,46	1,14	0,52	0,44	1,08
6	0,43	0,56	1	0,54	0,46	1	0,56	0,44	1

C_{0r} kN
Basic static load rating, see dimension tables
f_0 –
Factor, see dimension tables
F_a kN
Axial dynamic bearing load.

Equivalent static bearing load

The equivalent static load P_0 is valid for bearings that are subjected to radial and axial static loads.
It induces the same load at the centre point of the most heavily loaded contact point between the rolling element and raceway as the combined bearing load occurring in practice.

For bearings under static loading, the following applies:

Load ratio and equivalent static load

Load ratio	Equivalent static load
$\frac{F_{0a}}{F_{0r}} \leqq 0,8$	$P_0 = F_{0r}$
$\frac{F_{0a}}{F_{0r}} > 0,8$	$P_0 = 0,6 \cdot F_{0r} + 0,5 \cdot F_{0a}$

P_0 kN
Equivalent static bearing load for combined load

F_{0a} kN
Axial static bearing load

F_{0r} kN
Radial static bearing load.

Axial load carrying capacity

Deep groove ball bearings are also suitable for axial loads.

If the bearing is subjected to high loads and high speeds, a reduced life as well as increased friction and bearing temperature must be taken into consideration.

Minimum radial load

In order to ensure slippage-free operation, the bearings must be subjected to a minimum radial load. This applies particularly in the case of high speeds and high accelerations.
In continuous operation, ball bearings with cage must be subjected to a minimum radial load of the order of $P/C_r > 0,01$.

Design of bearing arrangements

Shaft and housing tolerances

Recommended shaft tolerances for radial bearings with cylindrical bore, see table, page 130.

Recommended housing tolerances for radial bearings, see table, page 131.

Mounting dimensions

The dimension tables give the maximum dimension of the radius r_a and the diameters of the abutment shoulders D_a and d_a.

Accuracy

The main dimensions of the standardised single row deep groove ball bearings correspond to DIN 625-1.

The dimensional and running tolerances of the standardised bearings correspond to tolerance class PN to DIN 620. Tolerances for special bearings are available by agreement.

The width tolerance of matched bearings deviates from this standard, see table.

Width tolerance of bearing rings in matched bearings

Bore diameter d mm		Width deviation Δ_{Bs} µm	
over	incl.	min.	max.
120	180	0	−750
180	250	0	−950
250	315	0	−1050
315	400	0	−1350
400	500	0	−1650

Radial internal clearance of bearings with cylindrical bore

The radial internal clearance corresponds to internal clearance group CN to DIN 620-4.

Standardised bearings with increased internal clearance have the suffix C3. Special bearings with radial internal clearance C3 or C4 are indicated in the dimension tables.

Radial internal clearance

Bore d mm		Radial internal clearance							
		C2 µm		CN µm		C3 µm		C4 µm	
over	incl.	min.	max.	min.	max.	min.	max.	min.	max.
140	160	2	23	18	53	46	91	81	130
160	180	2	25	20	61	53	102	91	147
180	200	2	30	25	71	63	117	107	163
200	225	2	35	25	85	75	140	125	195
225	250	2	40	30	95	85	160	145	225
250	280	2	45	35	105	90	170	155	245
280	315	2	55	40	115	100	190	175	270
315	355	3	60	45	125	110	210	195	300
355	400	3	70	55	145	130	240	225	340
400	450	3	80	60	170	150	270	250	380
450	500	3	90	70	190	170	300	280	420
500	560	10	100	80	210	190	330	310	470
560	630	10	110	90	230	210	360	340	520
630	710	20	130	110	260	240	400	380	570
710	800	20	140	120	290	270	450	430	630
800	900	20	160	140	320	300	500	480	700
900	1 000	20	170	150	350	330	550	530	770
1 000	1 120	20	180	160	380	360	600	580	850
1 120	1 250	20	190	170	410	390	650	630	920
1 250	1 400	30	200	190	440	420	700	680	990
1 400	1 600	30	210	210	470	450	750	730	1 060

Deep groove ball bearings

Single row

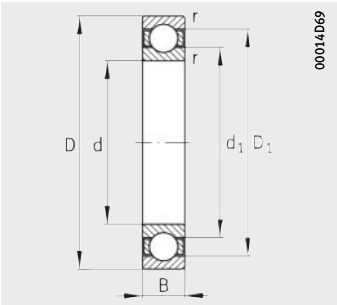

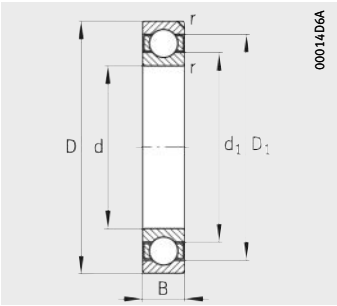

With retaining slot

Dimension table · Dimensions in mm

Designation	Mass	Dimensions					
	m	d	D	B	r	D_1	d_1
	≈kg				min.	≈	≈
6330-M	26,5	**150**	320	65	4	266,1	205,6
6330-M-C3	26,5	**150**	320	65	4	266,1	205,6
6332-M	31,6	**160**	340	68	4	280,9	219,7
6332-M-C3	31,6	**160**	340	68	4	280,9	219,7
6334-M	37,3	**170**	360	72	4	298	232,6
6334-M-C3	37,3	**170**	360	72	4	298	232,6
6236-M	19	**180**	320	52	4	272	228,7
6236-M-C3	19	**180**	320	52	4	272	228,7
6336-M	43	**180**	380	75	4	317	245,2
6336-M-C3	43	**180**	380	75	4	317	245,2
6238-M	22,6	**190**	340	55	4	291,5	239,9
6238-M-C3	22,6	**190**	340	55	4	291,5	239,9
6338-M	50,4	**190**	400	78	5	330,5	260,2
6338-M-C3	50,4	**190**	400	78	5	330,5	260,2
6240-M	27	**200**	360	58	4	306,5	254,9
6240-M-C3	27	**200**	360	58	4	306,5	254,9
6340-M	56,6	**200**	420	80	5	345,9	274,7
6340-M-C3	56,6	**200**	420	80	5	345,9	274,7
16044	11,8	**220**	340	37	2,1	298,1	262,8
6044-M	18,8	**220**	340	56	3	303,1	258,1
6044-M-C3	18,8	**220**	340	56	3	303,1	258,1
6244-M	37,9	**220**	400	65	4	337,6	282,2
6244-M-C3	37,9	**220**	400	65	4	337,6	282,2
6344-M	73,7	**220**	460	88	5	383	299,4
6344-M-C3	73,7	**220**	460	88	5	383	299,4
F-801656.KL[1)]	11,5	**230**	329,5	40	2,1	298,1	262,8
Z-508729.KL	11,5	**230**	329,5	40	2,1	298,1	262,8
60948-M	6,19	**240**	320	25	1,5	292,3	268,3
61948	6,83	**240**	320	38	2,1	298	262,9
61948-M-C3	8,53	**240**	320	38	2,1	298	262,9
61948-MA	8,48	**240**	320	38	2,1	298,9	262,9
Z-578545.KL	10,4	**240**	329,5	40	2,1	303	268

1) With retaining slot.

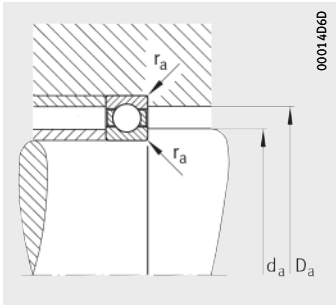

Mounting dimensions

Mounting dimensions			Basic load ratings		Fatigue limit load	Factor	Limiting speed	Reference speed
d_a	D_a	r_a	dyn. C_r	stat. C_{0r}	C_{ur}	f_0	n_G	n_B
min.	max.	max.	kN	kN	kN		min^{-1}	min^{-1}
167	303	3	280	290	13,1	13,8	4 800	3 000
167	303	3	280	290	13,1	13,8	4 800	3 000
177	323	3	300	325	14	13,9	4 300	2 800
177	323	3	300	325	14	13,9	4 300	2 800
187	343	3	325	365	14,7	13,9	4 000	2 600
187	343	3	325	365	14,7	13,9	4 000	2 600
197	303	3	224	245	10,3	15,3	4 800	2 750
197	303	3	224	245	10,3	15,3	4 800	2 750
197	363	3	355	405	16,3	13,9	3 800	2 440
197	363	3	355	405	16,3	13,9	3 800	2 440
207	323	3	255	280	11,6	15	4 300	2 600
207	323	3	255	280	11,6	15	4 300	2 600
210	380	4	375	440	17,5	14	3 600	2 300
210	380	4	375	440	17,5	14	3 600	2 300
217	343	3	270	310	12,4	15,3	4 000	2 430
217	343	3	270	310	12,4	15,3	4 000	2 430
220	400	4	380	465	18	14,1	3 400	2 170
220	400	4	380	465	18	14,1	3 400	2 170
230,2	329,8	2,1	200	240	8,4	16,3	4 300	2 310
232,4	327,6	2,5	245	290	11,1	15,6	4 000	2 700
232,4	327,6	2,5	245	290	11,1	15,6	4 000	2 700
237	383	3	300	355	13,5	15,2	3 600	2 200
237	383	3	300	355	13,5	15,2	3 600	2 200
240	440	4	440	560	20	14,1	3 200	1 960
240	440	4	440	560	20	14,1	3 200	1 960
240	319	2,1	200	240	8,4	16,3	4 300	–
240	319	2,1	200	240	8,4	16,3	4 300	–
247	313	1,5	108	146	5,1	16	4 300	2 000
250,2	309,8	2,1	200	240	8,4	16,3	4 300	2 330
250,2	309,8	2,1	200	240	8,4	16,3	4 300	2 330
250,2	309,8	2,1	200	240	8,4	16,3	4 300	2 330
250,2	319,3	2,1	196	240	8,7	16,4	4 000	–

Deep groove ball bearings

Single row

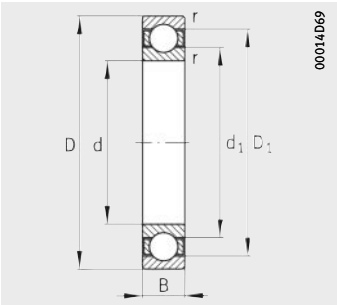

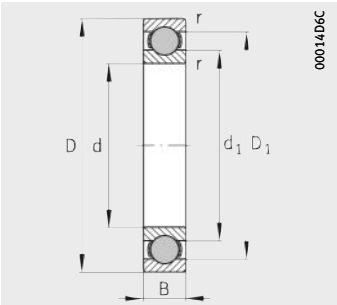

Hybrid deep groove ball bearings with ceramic balls

Dimension table (continued) · Dimensions in mm

Designation	Mass	Dimensions					
	m	d	D	B	r	D_1	d_1
	≈kg				min.	≈	≈
16048	12,7	**240**	360	37	2,1	317,4	283,1
6048-M	20,5	**240**	360	56	3	321,9	278,8
6048-M-C3	20,5	**240**	360	56	3	321,9	278,8
6248-M	51,3	**240**	440	72	4	369,6	309,9
6248-M-C3	51,3	**240**	440	72	4	369,6	309,9
6348-M	96,4	**240**	500	95	5	411,3	328,7
6348-M-C3	96,4	**240**	500	95	5	411,3	328,7
60852-M	2,17	**260**	320	19	1	298	282
F-HC808546.KL [1]	3,78	**260**	320	28	2	300,7	279,6
61852	4,23	**260**	320	28	2	300,7	279,6
61852-M	5,11	**260**	320	28	2	299,8	280,5
61852-MA	5,26	**260**	320	28	2	300,7	280,5
60952-M	10,5	**260**	360	31	2	324,3	296,2
61952-M	14,4	**260**	360	46	2,1	329,9	291,2
61952-M-C3	14,4	**260**	360	46	2,1	329,9	291,2
61952-MA	14,4	**260**	360	46	2,1	329,9	291,2
Z-507338.01.KL	16,4	**260**	369,5	46	2,1	329,9	291,2
16052	19,1	**260**	400	44	3	351,2	310
6052-M	29,8	**260**	400	65	4	357	304,6
6052-M-C3	29,8	**260**	400	65	4	357	304,6
6252-M	68,4	**260**	480	80	5	402,4	337,3
6252-M-C3	68,4	**260**	480	80	5	402,4	337,3
6352-M	118	**260**	540	102	6	446,1	355
6352-M-C3	118	**260**	540	102	6	446,1	355
60856-M	5,4	**280**	350	22	1,1	325,4	305,7
F-HC808547.KL [1]	5,63	**280**	350	33	2	328,1	302,7
F-804993.07.KL [2]	5,89	**280**	350	33	2	328,1	302,7
F-808547.KL [2]	5,89	**280**	350	33	2	328,1	302,7
61856	6,34	**280**	350	33	2	328,1	302,7
61856-M	7,56	**280**	350	33	2	327,3	303,4
61856-MA	7,92	**280**	350	33	2	328,1	303,4

[1] Hybrid deep groove ball bearing.

[2] With JN cage.

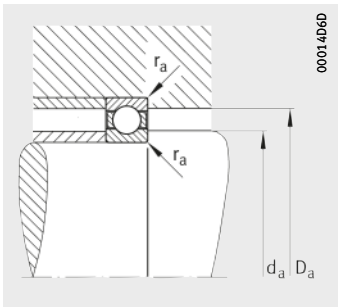

Mounting dimensions

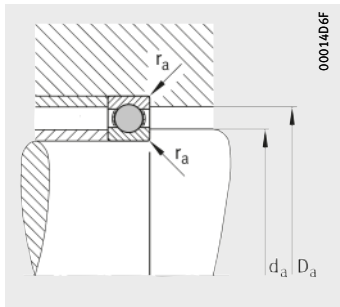

Mounting dimensions

Mounting dimensions			Basic load ratings		Fatigue limit load	Factor	Limiting speed	Reference speed
d_a	D_a	r_a	dyn. C_r	stat. C_{0r}	C_{ur}	f_0	n_G	n_B
min.	max.	max.	kN	kN	kN		min^{-1}	min^{-1}
250,2	349,8	2,1	204	255	8,5	16,4	3 800	2 100
252,4	347,6	2,5	255	315	11,4	15,8	3 800	2 450
252,4	347,6	2,5	255	315	11,4	15,8	3 800	2 450
257	423	3	360	475	16,7	15,2	3 400	1 980
257	423	3	360	475	16,7	15,2	3 400	1 980
260	480	4	465	620	21,8	14,2	3 000	1 800
260	480	4	465	620	21,8	14,2	3 000	1 800
264,6	315,4	1	67	104	3,6	15,6	4 300	1 700
268,8	311,2	2	42,5	55	1,61	13,2	4 300	–
268,8	311,2	2	96,5	132	4,55	15,8	4 300	2 070
268,8	311,2	2	96,5	132	4,55	15,8	4 300	2 070
268,8	311,2	2	96,5	132	4,55	15,8	4 300	2 070
268,8	351,2	2	153	200	6,4	16,1	3 800	1 900
270,2	349,8	2,1	220	280	8,6	16,3	3 800	2 180
270,2	349,8	2,1	220	280	8,6	16,3	3 800	2 180
270,2	349,8	2,1	220	280	8,6	16,3	3 800	2 180
270	359,5	2,1	220	280	8,6	16,3	3 800	–
272,4	387,6	2,5	236	310	9,9	16,4	3 600	1 960
274,6	385,4	3	300	390	13,3	15,7	3 400	2 260
274,6	385,4	3	300	390	13,3	15,7	3 400	2 260
280	460	4	405	560	19,2	15,2	3 000	1 820
280	460	4	405	560	19,2	15,2	3 000	1 820
265,6	534,4	5	520	720	24,8	14,3	2 800	1 650
265,6	534,4	5	520	720	24,8	14,3	2 800	1 650
286	344	1	90	134	4,55	15,7	4 000	1 600
288,8	341,2	2	60	68	2,05	12,5	3 800	–
288,8	341,2	2	81,5	88	–	16	3 800	–
288,8	341,2	2	81,5	88	2,9	16	3 800	–
288,8	341,2	2	129	176	5,8	16	3 800	1 950
288,8	341,2	2	129	176	5,8	16	3 800	–
288,8	341,2	2	129	176	5,8	16	3 800	–

Deep groove ball bearings

Single row

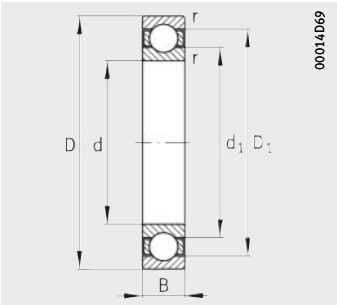

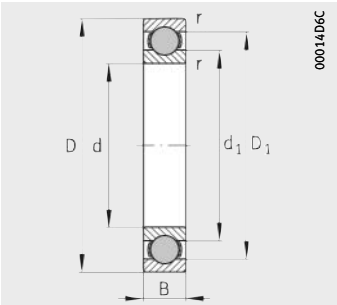

Hybrid deep groove ball bearings with ceramic balls

Dimension table (continued) · Dimensions in mm

Designation	Mass	Dimensions					
	m	d	D	B	r	D_1	d_1
	≈kg				min.	≈	≈
60956-M	11,2	**280**	380	31	2	344,3	316,2
61956	12,4	**280**	380	46	2,1	351,1	310,1
61956-M-C3	12,4	**280**	380	46	2,1	351,1	310,1
Z-507341.KL	17,3	**280**	389,5	46	2,1	350,5	310,1
16056-M	23,2	**280**	420	44	3	370,6	329,9
6056-M	31,7	**280**	420	65	4	377,5	324,1
6056-M-C3	31,7	**280**	420	65	4	377,5	324,1
6256-M	72,9	**280**	500	80	5	423	356,7
6256-M-C3	72,9	**280**	500	80	5	423	356,7
6356-M	147	**280**	580	108	6	481,1	384
6356-M-C3	147	**280**	580	108	6	481,1	384
Z-578599.KL	26,2	**290**	409,5	60	3	375	325,6
60860-M	7,55	**300**	380	25	1,5	351,3	329,3
F-HC808548.KL[1)]	8,03	**300**	380	38	2,1	354,7	326,2
61860	8,97	**300**	380	38	2,1	354,7	326,2
61860-M	10,7	**300**	380	38	2,1	353,8	327
Z-538205.KL	24,4	**300**	419,5	56	3	383	337,1
60960-M	17,6	**300**	420	37	2,1	376,6	344,3
61960-M	24	**300**	420	56	3	384,2	337,1
61960-M-C3	24	**300**	420	56	3	384,2	337,1
61960-MA	26,2	**300**	420	56	3	385,1	337,1
61960-MB	25,9	**300**	420	56	3	384,2	336,4
16060-M	32,6	**300**	460	50	4	404	357,3
6060-M	44,5	**300**	460	74	4	410,8	350,8
6060-M-C3	44,5	**300**	460	74	4	410,8	350,8
6060-MB-C3	44,5	**300**	460	74	4	410,8	350,8
6260-M	90,5	**300**	540	85	5	456,1	383,3
6260-M-C3	90,5	**300**	540	85	5	456,1	383,3
6360-M	170	**300**	620	109	7,5	511,8	410,5
6360-M-C3	170	**300**	620	109	7,5	511,8	410,5

[1)] Hybrid deep groove ball bearing.

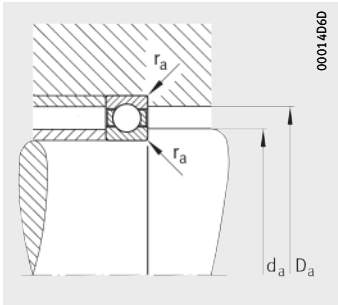

Mounting dimensions

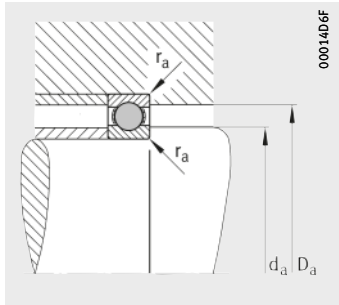

Mounting dimensions

Mounting dimensions			Basic load ratings		Fatigue limit load	Factor	Limiting speed	Reference speed
d_a	D_a	r_a	dyn. C_r	stat. C_{0r}	C_{ur}	f_0	n_G	n_B
min.	max.	max.	kN	kN	kN		min^{-1}	min^{-1}
288,8	371,2	2	156	216	6,9	16	3 600	1 700
290,2	369,8	2,1	236	310	9,9	16,4	3 600	1 990
290,2	369,8	2,1	236	310	9,9	16,4	3 600	1 990
290	379,5	2,1	236	310	9,4	16,4	3 600	–
292,4	407,6	2,5	240	325	10,1	16,4	3 400	1 800
294,6	405,4	3	320	440	14,4	15,8	3 400	2 070
294,6	405,4	3	320	440	14,4	15,8	3 400	2 070
291	489	4	425	600	20,3	15,3	3 000	1 690
291	489	4	425	600	20,3	15,3	3 000	1 690
285,6	574,4	5	610	915	26	14,3	2 600	1 470
285,6	574,4	5	610	915	26	14,3	2 600	1 470
302,4	397,1	2,5	310	425	13,8	15,9	3 400	–
307	373	1,5	112	166	5,5	15,7	3 600	1 500
310,2	369,8	2,1	71	80	2,22	12,5	3 600	–
310,2	369,8	2,1	153	204	6,3	16	3 600	1 850
310,2	369,8	2,1	153	204	6,3	16	3 600	–
312,4	407,1	2,5	285	400	11,6	16,2	3 200	–
310,2	409,8	2,1	204	275	8,5	16,2	3 400	1 600
312,4	407,6	2,5	285	400	12,4	16,2	3 200	1 890
312,4	407,6	2,5	285	400	12,4	16,2	3 200	1 890
312,4	407,6	2,5	285	400	12,4	16,2	3 200	1 890
312,4	407,6	2,5	285	400	12,4	16,2	3 200	1 890
314,6	445,4	3	300	430	12,7	16,4	3 200	1 670
314,6	445,4	3	365	510	16,7	15,7	3 000	1 930
314,6	445,4	3	365	510	16,7	15,7	3 000	1 930
314,6	445,4	3	365	510	16,7	15,7	3 000	1 930
320	520	4	455	670	19,7	15,3	2 800	1 550
320	520	4	455	670	19,7	15,3	2 800	1 550
332	588	6	640	980	31	14,4	2 400	1 360
332	588	6	640	980	31	14,4	2 400	1 360

Deep groove ball bearings

Single row

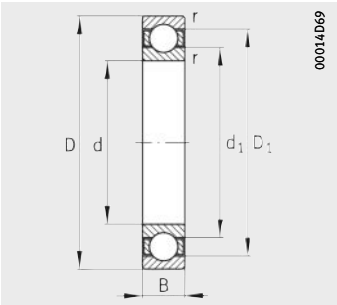

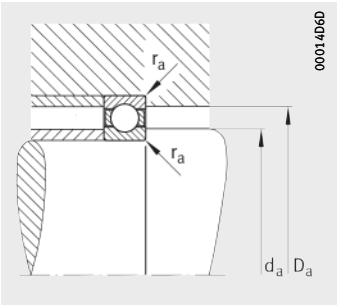

Mounting dimensions

Dimension table (continued) · Dimensions in mm

Designation	Mass	Dimensions					
	m	d	D	B	r	D_1	d_1
	≈kg				min.	≈	≈
60864-M	7,98	**320**	400	25	1,5	371,5	349,2
61864-M	11,3	**320**	400	38	2,1	373,8	347
60964-M	18,5	**320**	440	37	2,1	395,7	364
61964-M	25,3	**320**	440	56	3	403,9	357,3
61964-M-C3	25,3	**320**	440	56	3	403,9	357,3
61964-MA	25	**320**	440	56	3	405,1	357,3
F-807088.KL	27,6	**320**	449,5	56	3	403,9	356,4
16064-M	34,9	**320**	480	50	4	423,1	377,7
6064-M	47,4	**320**	480	74	4	430,8	370,9
6064-M-C3	47,4	**320**	480	74	4	430,8	370,9
6064-MB-C3	47,4	**320**	480	74	4	430,8	370,9
6264-M	113	**320**	580	92	5	492,5	410
6264-M-C3	113	**320**	580	92	5	492,5	410
Z-507360.01.KL	126	**320**	580	105	5	491,5	410,8
6364-M	205	**320**	670	112	7,5	546,8	446,3
6364-M-C3	205	**320**	670	112	7,5	546,8	446,3
Z-509173.KL	29,6	**330**	460	56	3	423,1	377,9
60868-M	8,22	**340**	420	25	1,5	391,3	369,3
61868-M	12	**340**	420	38	2,1	394,2	366,7
61868-MA	12	**340**	420	38	2,1	394,2	366,7
60968-M	19,8	**340**	460	37	2,1	417	384
61968-M	27,3	**340**	460	56	3	423,1	377,8
61968-MA	27	**340**	460	56	3	424	377,8
61968-MB-C3	27,3	**340**	460	56	3	423,1	377,8
Z-538204.KL	35,4	**340**	479,5	60	3	431,1	388
Z-503809.KL	35,5	**340**	480	60	3	432	388
Z-576368.KL	40,9	**340**	489,5	65	5	442	388,6
16068-M	47,5	**340**	520	57	4	457,1	403,6
6068-M	63,2	**340**	520	82	5	469,6	402,3
6068-M-C3	63,2	**340**	520	82	5	469,6	402,3
6068-MB-C3	63,2	**340**	520	82	5	469,6	402,3
6268-M	118	**340**	620	92	6	530	446,5
6268-M-C3	118	**340**	620	92	6	530	446,5
6368-M	244	**340**	710	118	7,5	578	474
6368-M-C3	244	**340**	710	118	7,5	578	474
Z-532002.KL	44,3	**350**	500	70	4	457,1	402,7



Mounting dimensions			Basic load ratings		Fatigue limit load	Factor	Limiting speed	Reference speed
d_a	D_a	r_a	dyn. C_r	stat. C_{0r}	C_{ur}	f_0	n_G	n_B
min.	max.	max.	kN	kN	kN		min^{-1}	min^{-1}
327	393	1,5	114	176	5,2	15,7	3 400	1 400
330,2	389,8	2,1	156	220	6,5	15,9	3 400	1 710
330,2	429,8	2,1	204	285	8,6	16,1	3 200	1 500
332,4	427,6	2,5	300	430	12,7	16,4	3 200	1 750
332,4	427,6	2,5	300	430	12,7	16,4	3 200	1 750
332,4	427,6	2,5	300	430	12,7	16,4	3 200	1 750
332,4	437,1	2,5	300	430	12,7	16,4	3 200	–
334,6	465,4	3	305	455	13	16,4	3 000	1 550
334,6	465,4	3	380	560	17,4	15,9	3 000	1 790
334,6	465,4	3	380	560	17,4	15,9	3 000	1 790
334,6	465,4	3	380	560	17,4	15,9	3 000	1 790
340	560	4	530	815	23,5	15,2	2 600	1 430
340	560	4	530	815	23,5	15,2	2 600	1 430
340	560	4	530	815	23,5	15,2	2 600	–
325,6	664,4	6	630	1 000	30,5	14,8	2 200	1 250
325,6	664,4	6	630	1 000	30,5	14,8	2 200	1 250
352,4	447,6	2,5	305	455	13	16,4	3 000	–
347	413	1,5	118	186	5,8	15,6	3 400	1 300
350,2	409,8	2,1	156	220	6,6	15,9	3 200	1 590
350,2	409,8	2,1	156	220	6,6	15,9	3 200	1 590
350,2	449,8	2,1	208	300	8,8	16	3 000	1 400
352,4	447,6	2,5	305	455	13	16,4	3 000	1 630
352,4	447,6	2,5	305	455	13	16,4	3 000	1 630
352,4	447,6	2,5	305	455	13	16,4	3 000	1 630
352,4	467,4	2,5	280	415	11,9	16,5	3 000	–
352,4	467,6	2,5	280	415	11,9	16,5	3 000	–
358	471,5	4	345	510	13,9	16,2	2 800	–
354,6	505,4	3	355	550	17,8	16,3	2 800	1 460
358	502	4	440	695	20,8	15,8	2 800	1 630
358	502	4	440	695	20,8	15,8	2 800	1 630
358	502	4	440	695	20,8	15,8	2 800	1 630
366	594	5	550	900	26	15,5	2 400	1 270
366	594	5	550	900	26	15,5	2 400	1 270
345,6	704,4	6	710	1 180	35	14,9	2 000	1 160
345,6	704,4	6	710	1 180	35	14,9	2 000	1 160
365	485	3	355	550	15,3	16,3	2 800	–

Deep groove ball bearings

Single row

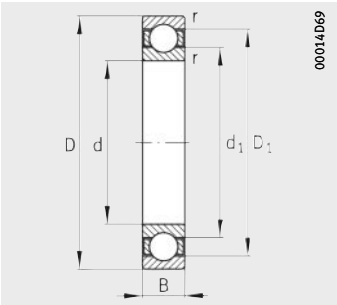

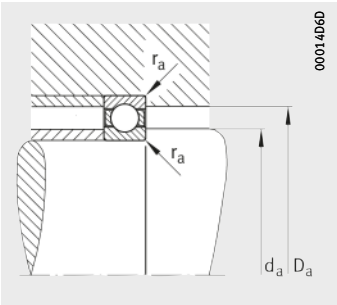

Mounting dimensions

Dimension table (continued) · Dimensions in mm

Designation	Mass	Dimensions					
	m	d	D	B	r	D_1	d_1
	≈kg				min.	≈	≈
60872-M	8,87	**360**	440	25	1,5	411,5	389,2
61872-M	12,8	**360**	440	38	2,1	413	387,7
61872-MA	12,8	**360**	440	38	2,1	414,2	387,7
61872-MB	12,8	**360**	440	38	2,1	413	386,7
F-804093.KL	27,9	**360**	479	56	3	442,8	397
60972-M	20,4	**360**	480	37	2,1	437	404
61972-M	28,7	**360**	480	56	3	442,8	398
61972-MA	30,6	**360**	480	56	3	444	398
61972-MB	28,2	**360**	480	56	3	442,8	397
61972-MB-C3	28,2	**360**	480	56	3	442,8	397
16072-M	49,4	**360**	540	57	4	478,1	423,5
6072-M	66,2	**360**	540	82	5	489	423,7
6072-M-C3	66,2	**360**	540	82	5	489	423,7
6072-MB-C3	66,2	**360**	540	82	5	489	423,7
Z-533303.KL	76,8	**360**	550	85	5	490,3	423,7
6272-M	148	**360**	650	95	6	549	462,7
6272-M-C3	148	**360**	650	95	6	549	462,7
6372-M	293	**360**	750	125	7,5	611	499
6372-M-C3	293	**360**	750	125	7,5	611	499
60876-M	14,2	**380**	480	31	2	444,1	416,7
61876-M	20,6	**380**	480	46	2,1	445,9	414,1
Z-576367.KL	40,3	**380**	519,5	65	4	478,2	423,7
60976-M	30,3	**380**	520	44	3	469,4	431,3
61976-M	40,6	**380**	520	65	4	478	423,5
61976-MA	41,9	**380**	520	65	4	479,3	423,5
61976-MB	41,4	**380**	520	65	4	478	422,5
61976-MB-C3	41,4	**380**	520	65	4	478	422,5
16076-M	51,7	**380**	560	57	4	498	443,5
6076-M	69,6	**380**	560	82	5	504	438,6
6076-M-C3	69,6	**380**	560	82	5	504	438,6
6076-MB-C3	69,6	**380**	560	82	5	504	438,6
6276-M	161	**380**	680	95	6	574	487,7
6276-M-C3	161	**380**	680	95	6	574	487,7
6376-M	317	**380**	780	128	7,5	640	523,5
6376-M-C3	317	**380**	780	128	7,5	640	523,5



Mounting dimensions			Basic load ratings		Fatigue limit load	Factor	Limiting speed	Reference speed
d_a	D_a	r_a	dyn. C_r	stat. C_{0r}	C_{ur}	f_0	n_G	n_B
min.	max.	max.	kN	kN	kN		min^{-1}	min^{-1}
367	433	1,5	120	196	5,5	15,6	3 200	1 200
370,2	429,8	2,1	160	236	6,9	15,8	3 200	1 480
370,2	429,8	2,1	160	236	6,9	15,8	3 200	1 480
370,2	429,8	2,1	160	236	6,9	15,8	3 200	1 480
372,4	467,6	2,5	310	480	13,3	16,5	3 000	1 500
370,2	469,8	2,1	208	305	8,9	15,9	3 000	1 300
372,4	467,6	2,5	310	480	13,2	16,5	3 000	1 520
372,4	467,6	2,5	310	480	13,2	16,5	3 000	1 520
372,4	467,6	2,5	310	480	13,2	16,5	3 000	1 520
372,4	467,6	2,5	310	480	13,2	16,5	3 000	1 520
374,6	525,4	3	365	585	15,7	16,4	2 800	1 370
378	522	4	455	735	21,5	15,9	2 600	1 530
378	522	4	455	735	21,5	15,9	2 600	1 530
378	522	4	455	735	21,5	15,9	2 600	1 530
378	532	4	455	735	21,5	15,9	2 600	–
362,4	647,6	5	560	900	25,5	15,4	2 200	1 240
362,4	647,6	5	560	900	25,5	15,4	2 200	1 240
365,6	744,4	6	735	1 250	35	14,8	1 900	1 100
365,6	744,4	6	735	1 250	35	14,8	1 900	1 100
388,8	471,2	2	166	260	7,2	15,7	3 000	1 200
390,2	469,8	2,1	220	320	8,9	16	3 000	1 430
394,6	505,4	3	365	585	15,1	16,4	2 800	–
392,4	507,6	2,5	250	390	11,2	16	2 800	1 300
394,6	505,4	3	365	585	15,1	16,4	2 800	1 450
394,6	505,4	3	365	585	15,1	16,4	2 800	1 450
394,6	505,4	3	365	585	15,1	16,4	2 800	1 450
394,6	505,4	3	365	585	15,1	16,4	2 800	1 450
394,6	545,4	3	375	620	16,1	16,5	2 600	1 290
398	542	4	455	750	21,1	16	2 600	1 470
398	542	4	455	750	21,1	16	2 600	1 470
398	542	4	455	750	21,1	16	2 600	1 470
406	654	5	585	980	27	15,6	2 000	1 150
406	654	5	585	980	27	15,6	2 000	1 150
412	748	6	830	1 460	42,5	14,8	1 800	1 020
412	748	6	830	1 460	42,5	14,8	1 800	1 020

Deep groove ball bearings

Single row

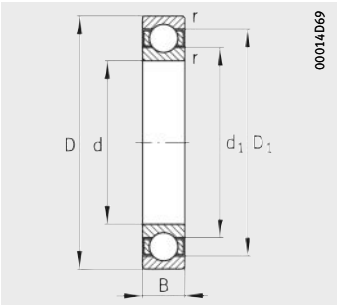

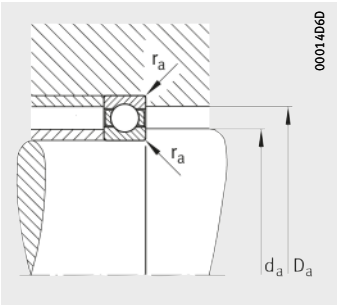

Mounting dimensions

Dimension table (continued) · Dimensions in mm

Designation	Mass	Dimensions					
	m	d	D	B	r	D_1	d_1
	≈kg				min.	≈	≈
60880-M	15,3	**400**	500	31	2	464,1	436,7
61880-M	21,5	**400**	500	46	2,1	467,3	433,7
60980-M	31,7	**400**	540	44	3	488,1	452,8
61980-M	42,5	**400**	540	65	4	498	443,6
61980-MA	42,7	**400**	540	65	4	499,3	443,6
61980-MB	42,6	**400**	540	65	4	498	442,5
61980-MB-C3	42,6	**400**	540	65	4	498	442,5
16080-M	69,3	**400**	600	63	5	525,8	472
6080-M	90,6	**400**	600	90	5	536,3	465
6080-M-C3	90,6	**400**	600	90	5	536,3	465
6080-MB-C3	90,6	**400**	600	90	5	536,3	465
F-801513.KL	90,6	**400**	600	90	5	536,3	465
6280-M	203	**400**	720	103	6	606,2	515,7
6280-M-C3	203	**400**	720	103	6	606,2	515,7
6380-M	371	**400**	820	136	7,5	672	551,5
6380-M-C3	371	**400**	820	136	7,5	672	551,5
60884-M	15,9	**420**	520	31	2	484,4	456,4
61884-M	22,8	**420**	520	46	2,1	485,8	454,3
Z-576366.KL	45,4	**420**	559,5	65	4	517,9	463,5
60984-M	33,3	**420**	560	44	3	508,1	472,9
61984-M	45,6	**420**	560	65	4	517,9	463,5
61984-MA	47,2	**420**	560	65	4	519,3	463,5
61984-MB	44,9	**420**	560	65	4	517,9	462,4
61984-MB-C3	44,9	**420**	560	65	4	517,9	462,4
Z-544178.KL	57	**420**	580	70	4	529	473
Z-508748.KL	60,2	**420**	580	72	3	528	472
16084-M	72,1	**420**	620	63	5	547	494
6084-M	99,7	**420**	620	90	5	556,4	484,9
6084-MB-C3	99,7	**420**	620	90	5	556,4	484,9



Mounting dimensions			Basic load ratings		Fatigue limit load	Factor	Limiting speed	Reference speed
d_a	D_a	r_a	dyn. C_r	stat. C_{0r}	C_{ur}	f_0	n_G	n_B
min.	max.	max.	kN	kN	kN		min^{-1}	min^{-1}
408,8	491,2	2	170	275	7,4	15,7	2 800	1 100
410,2	489,8	2,1	220	335	8,8	15,9	2 800	1 340
412,4	527,6	2,5	245	390	10,6	15,9	2 800	1 200
414,6	525,4	3	375	620	15,7	16,5	2 600	1 360
414,6	525,4	3	375	620	15,7	16,5	2 600	1 360
414,6	525,4	3	375	620	15,7	16,5	2 600	1 360
414,6	525,4	3	375	620	15,7	16,5	2 600	1 360
418	582	4	380	630	19,1	16,5	2 400	1 240
418	582	4	520	865	23,5	15,9	2 200	1 390
418	582	4	520	865	23,5	15,9	2 200	1 390
418	582	4	520	865	23,5	15,9	2 200	1 390
418	582	4	520	865	23,5	15,9	2 200	–
402,4	717,6	5	620	1 080	27	15,6	1 900	1 100
402,4	717,6	5	620	1 080	27	15,6	1 900	1 100
432	788	6	865	1 600	44	14,9	1 700	980
432	788	6	865	1 600	44	14,9	1 700	980
428,8	511,2	2	173	285	8	15,6	2 800	1 000
430,2	509,8	2,1	224	345	9,2	15,9	2 800	1 260
434,6	545,4	3	390	655	16,3	16,5	2 600	–
432,4	547,6	2,5	250	400	10,8	15,9	2 600	1 100
434,6	545,4	3	390	655	16,3	16,5	2 600	1 280
434,6	545,4	3	390	655	16,3	16,5	2 600	1 280
434,6	545,4	3	390	655	16,3	16,5	2 600	1 280
434,6	545,4	3	390	655	16,3	16,5	2 600	1 280
434,6	565,4	3	380	640	14,4	16,5	2 400	–
432,4	567,6	2,5	380	630	19,1	16,5	2 400	–
438	602	4	390	670	16,8	16,4	2 200	1 170
438	602	4	530	930	24,4	16	2 200	1 310
438	602	4	530	930	24,4	16	2 200	1 310

Deep groove ball bearings

Single row

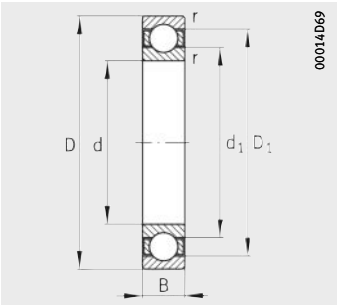

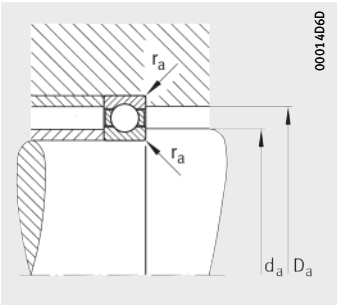

Mounting dimensions

Dimension table (continued) · Dimensions in mm

Designation	Mass	Dimensions					
	m	d	D	B	r	D_1	d_1
	≈kg				min.	≈	≈
60888-M	16,8	**440**	540	31	2	504,1	476,7
61888-M	23,8	**440**	540	46	2,1	505,9	474,2
60988-M	45,5	**440**	600	50	4	540,9	500,2
61988-M	62,1	**440**	600	74	4	549,2	492,4
61988-MB-C3	62,1	**440**	600	74	4	549,2	492,4
16088-M	86,3	**440**	650	67	5	566,8	514
6088-M	108	**440**	650	94	6	583,6	507,7
6088-MB-C3	108	**440**	650	94	6	583,6	507,7
60892-M	26	**460**	580	37	2,1	535,6	504,4
61892-M	35,8	**460**	580	56	3	540,9	500,2
61892-MA	36,7	**460**	580	56	3	542	500,2
60992-M	46,2	**460**	620	50	4	561	520
61992-M	64,6	**460**	620	74	4	569,2	512,4
61992-MA	64,6	**460**	620	74	4	570,4	512,4
61992-MB-C3	64,6	**460**	620	74	4	569,2	512,4
F-803489.KL	126	**460**	679	100	6	612,6	528,7
16092-M	95,9	**460**	680	71	5	595,5	536,1
6092-M	125	**460**	680	100	6	612,6	529,8
6092-MB-C3	127	**460**	680	100	6	612,6	528,7
F-804931.KL	18,1	**480**	580	30	2	543,1	517,7
60896-M	26,6	**480**	600	37	2,1	555,6	524,4
61896-M	37,3	**480**	600	56	3	560,9	520,3
61896-MA	38,6	**480**	600	56	3	562	520,3
60996-M	57	**480**	650	54	4	587,9	544
61996-M	75,6	**480**	650	78	5	595,4	536,2
61996-MA	78,7	**480**	650	78	5	596,9	536,2
61996-MB	74,6	**480**	650	78	5	595,4	535
61996-MB-C3	74,6	**480**	650	78	5	595,4	535
F-801512.KL	104	**480**	680	90	6	618,6	543,8
16096-M	100	**480**	700	71	5	615,4	556,1
6096-M	129	**480**	700	100	6	632,8	549,6
6096-MB-C3	129	**480**	700	100	6	632,8	549,6



Mounting dimensions			Basic load ratings		Fatigue limit load	Factor	Limiting speed	Reference speed
d_a	D_a	r_a	dyn. C_r	stat. C_{0r}	C_{ur}	f_0	n_G	n_B
min.	max.	max.	kN	kN	kN		min^{-1}	min^{-1}
448,8	531,2	2	173	290	7,6	15,6	2 600	1 000
450,2	529,8	2,1	228	355	9,4	15,8	2 600	1 190
454,6	585,4	3	290	480	12	16	2 400	1 100
454,6	585,4	3	400	695	17,6	16,5	2 200	1 250
454,6	585,4	3	400	695	17,6	16,5	2 200	1 250
458	632	4	400	710	17,2	16,4	2 200	1 140
463	627	5	550	965	25,5	16	2 000	1 250
463	627	5	550	965	25,5	16	2 000	1 250
470,2	569,8	2,1	228	375	10,2	15,7	2 400	950
472,4	567,6	2,5	290	480	12	16	2 400	1 170
472,4	567,6	2,5	290	480	12	16	2 400	1 170
474,6	605,4	3	305	520	13,3	16	2 200	1 000
474,6	605,4	3	415	735	18,1	16,4	2 200	1 180
474,6	605,4	3	415	735	18,1	16,4	2 200	1 180
474,6	605,4	3	415	735	18,1	16,4	2 200	1 180
483	656	5	585	1 060	27	16	1 900	–
478	662	4	440	815	19,6	16,4	2 000	1 090
483	657	5	585	1 060	27	16	1 900	1 200
483	657	5	585	1 060	27	16	1 900	1 200
488,8	571,2	2	156	280	6,9	15,5	2 400	–
490,2	589,8	2,1	232	390	10,3	15,6	2 200	900
492,4	587,6	2,5	290	500	12,1	15,9	2 200	1 110
492,4	587,6	2,5	290	500	12,1	15,9	2 200	1 110
494,6	635,4	3	325	570	14,1	16	2 000	1 000
498	632	4	440	815	18,4	16,4	2 000	1 130
498	632	4	440	815	18,4	16,4	2 000	1 130
498	632	4	440	815	18,4	16,4	2 000	1 130
498	632	4	440	815	18,4	16,4	2 000	1 130
503	657	5	520	950	22,8	16,3	1 900	–
498	682	4	440	800	19,2	16,4	1 900	1 040
503	677	5	610	1 140	28,5	16	1 900	1 140
503	677	5	610	1 140	28,5	16	1 900	1 140

Deep groove ball bearings

Single row

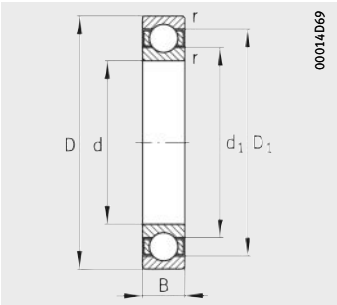

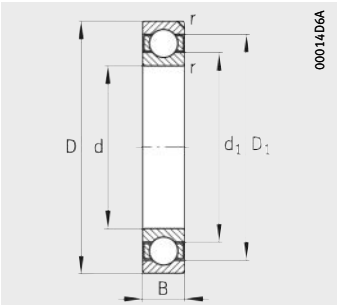

With retaining slot

Dimension table (continued) · Dimensions in mm

Designation	Mass	Dimensions					
	m	d	D	B	r	D_1	d_1
	≈kg				min.	≈	≈
608/500-M	27,9	**500**	620	37	2,1	575,6	544,4
618/500-M	38,7	**500**	620	56	3	580,9	540,4
618/500-MA	40,2	**500**	620	56	3	582	540,4
618/500-MB	40,1	**500**	620	56	3	580,9	539,3
609/500-M	59	**500**	670	54	4	607,9	564
619/500-M	79	**500**	670	78	5	615,4	556,2
619/500-MA	79	**500**	670	78	5	615,4	556,2
619/500-MB	79	**500**	670	78	5	615,4	556,2
619/500-MB-C3	79	**500**	670	78	5	615,4	556,2
F-804943.KL	81,2	**500**	670	78	5	616,9	555,9
Z-530352.KL	116	**500**	700	100	6	640	562
160/500-M	105	**500**	720	71	5	635,9	581,7
60/500-M	133	**500**	720	100	6	657,4	574,9
60/500-MB-C3	133	**500**	720	100	6	657,4	574,9
F-800562.KL	132	**520**	719	100	5	660,5	582
608/530-M	29,4	**530**	650	37	2,1	605,6	574,4
618/530-M	41,3	**530**	650	56	3	610,8	570,4
618/530-MA	42,4	**530**	650	56	3	612	570,4
618/530-MB	42,3	**530**	650	56	3	610,8	569,3
609/530-M	69,8	**530**	710	57	4	646	595,3
619/530-M	92	**530**	710	82	5	652,3	589,7
619/530-MB	92	**530**	710	82	5	652,3	589,7
619/530-MB-C3	92	**530**	710	82	5	652,3	589,7
Z-508780.KL[1)]	157	**530**	760	100	6	683	606
160/530-M	142	**530**	780	80	6	688,7	624,7
60/530-M	185	**530**	780	112	6	701,8	610,3
60/530-MB-C3	185	**530**	780	112	6	701,8	610,3
Z-529220.KL[1)]	190	**530**	780	112	6	701,8	609,3
608/560-M	30,5	**560**	680	37	2,1	636,7	604,3
618/560-M	35,1	**560**	680	56	3	640,7	600,4
618/560-MA	34,8	**560**	680	56	3	642	600,4
618/560-MB	44,5	**560**	680	56	3	640,7	599,3
609/560-M	81,6	**560**	750	60	4	681	630,4
619/560-M	107	**560**	750	85	5	690	623,9

[1)] With retaining slot.

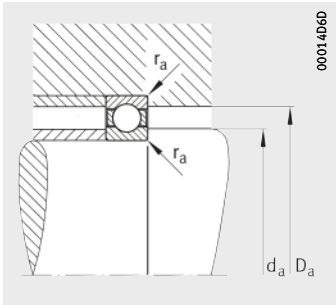

Mounting dimensions

Mounting dimensions			Basic load ratings		Fatigue limit load	Factor	Limiting speed	Reference speed
d_a	D_a	r_a	dyn. C_r	stat. C_{0r}	C_{ur}	f_0	n_G	n_B
min.	max.	max.	kN	kN	kN		min^{-1}	min^{-1}
510,2	609,8	2,1	232	405	10,3	15,6	2 200	850
512,4	607,6	2,5	300	510	12,3	15,9	2 000	1 060
512,4	607,6	2,5	300	510	12,3	15,9	2 000	1 060
512,4	607,6	2,5	300	510	12,3	15,9	2 000	1 060
514,6	655,4	3	325	585	14,6	15,9	2 000	950
518	652	4	440	800	18,2	16,4	1 900	1 080
518	652	4	440	800	18,2	16,4	1 900	1 080
518	652	4	440	800	18,2	16,4	1 900	1 080
518	652	4	440	800	18,2	16,4	1 900	1 080
518	652	4	440	800	18,2	16,4	1 900	–
523	677	5	585	1 120	27	16,2	900	–
518	702	4	425	780	22	16,3	1 900	980
523	697	5	610	1 140	27,5	16,1	1 800	1 100
523	697	5	610	1 140	27,5	16,1	1 800	1 100
538	701	4	585	1 120	24,7	16,3	1 800	–
540,2	639,8	2,1	236	425	10,5	15,6	2 000	800
542,4	637,6	2,5	305	550	12,8	15,8	2 000	980
542,4	637,6	2,5	305	550	12,8	15,8	2 000	980
542,4	637,6	2,5	305	550	12,8	15,8	2 000	980
544,6	695,4	3	380	720	17,1	16	1 900	850
548	692	4	465	880	20	16,3	1 800	1 010
548	692	4	465	880	20	16,3	1 800	1 010
548	692	4	465	880	20	16,3	1 800	1 010
553	737	5	600	1 160	26,5	16,3	1 700	–
553	757	5	510	1 000	22,5	16,3	1 700	920
553	757	5	710	1 400	32,5	16	1 700	1 000
553	757	5	710	1 400	32,5	16	1 700	1 000
553	757	5	710	1 400	32,5	16	1 700	–
570,2	669,8	2,1	240	440	9,9	15,5	1 900	750
572,4	667,6	2,5	310	560	12,8	15,8	1 900	920
572,4	667,6	2,5	310	560	12,8	15,8	1 900	920
572,4	667,6	2,5	310	560	12,8	15,8	1 900	920
574,6	735,4	3	390	735	16,5	16	1 800	800
578	732	4	510	1 000	22,5	16,3	1 700	940

Deep groove ball bearings

Single row

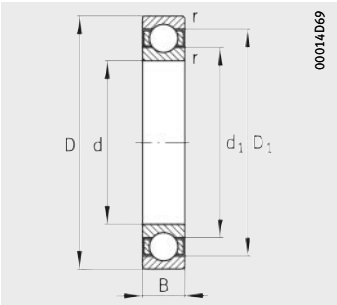

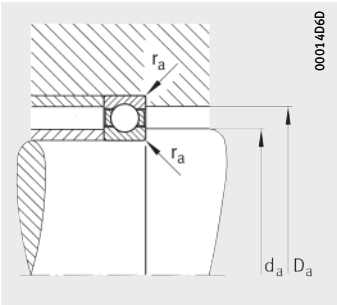

Mounting dimensions

Dimension table (continued) · Dimensions in mm

Designation	Mass	Dimensions					
	m	d	D	B	r	D_1	d_1
	≈kg				min.	≈	≈
619/560-MA	107	**560**	750	85	5	690	623,9
619/560-MB	107	**560**	750	85	5	690	623,9
619/560-MB-C3	107	**560**	750	85	5	690	623,9
160/560-M	137	**560**	820	82	6	732,7	668,3
60/560-M	209	**560**	820	115	6	740,4	643,2
60/560-MB-C3	209	**560**	820	115	6	740,4	643,2
608/600-M	40,1	**600**	730	42	3	683,3	647,8
618/600-M	54,2	**600**	730	60	3	687,8	643,6
618/600-MA	54,3	**600**	730	60	3	689	643,6
609/600-M	96,7	**600**	800	63	5	728,1	673,5
619/600-M	128	**600**	800	90	5	736	666
619/600-MA	128	**600**	800	90	5	736	666
619/600-MB	128	**600**	800	90	5	736	666
619/600-MB-C3	128	**600**	800	90	5	736	666
160/600-M	180	**600**	870	85	6	771	700,5
60/600-M	238	**600**	870	118	6	785,4	688
60/600-MB-C3	238	**600**	870	118	6	785,4	688
608/630-M	56,1	**630**	780	48	3	725,9	685,4
618/630-M	75,9	**630**	780	69	4	730,5	681,1
618/630-MA	77,3	**630**	780	69	4	732	681,1
609/630-M	126	**630**	850	71	5	769	711
619/630-M	167	**630**	850	100	6	780,3	701,7
619/630-MA	167	**630**	850	100	6	780,3	701,7
619/630-MB	167	**630**	850	100	6	780,3	701,7
619/630-MB-C3	167	**630**	850	100	6	780,3	701,7
160/630-M	220	**630**	920	92	6	813,5	738,5
60/630-M	287	**630**	920	128	7,5	831,9	721,2
60/630-MB-C3	287	**630**	920	128	7,5	831,9	721,2
Z-508308.KL	327	**640**	940	128	7,5	844	740
F-800564.KL	268	**650**	919	118	6	831,8	738,7
Z-514645.KL	262	**650**	920	118	6	828,7	738,7



Mounting dimensions			Basic load ratings		Fatigue limit load	Factor	Limiting speed	Reference speed
d_a	D_a	r_a	dyn. C_r	stat. C_{0r}	C_{ur}	f_0	n_G	n_B
min.	max.	max.	kN	kN	kN		min^{-1}	min^{-1}
578	732	4	510	1 000	22,5	16,3	1 700	940
578	732	4	510	1 000	22,5	16,3	1 700	940
578	732	4	510	1 000	22,5	16,3	1 700	940
583	797	5	550	1 120	24,1	16,3	1 600	840
583	797	5	765	1 530	35,5	16	1 600	950
583	797	5	765	1 530	35,5	16	1 600	950
612,4	717,6	2,5	255	475	10,6	15,5	1 800	700
612,4	717,6	2,5	355	670	15	15,8	1 800	850
612,4	717,6	2,5	355	670	15	15,8	1 800	850
618	782	4	440	880	18,7	16	1 600	750
618	782	4	550	1 120	23,6	16,3	1 600	880
618	782	4	550	1 120	23,6	16,3	1 600	880
618	782	4	550	1 120	23,6	16,3	1 600	880
618	782	4	550	1 120	23,6	16,3	1 600	880
623	847	5	550	1 120	23,4	16,3	1 500	800
623	847	5	780	1 660	36,5	16,1	1 500	850
623	847	5	780	1 660	36,5	16,1	1 500	850
642,4	767,6	2,5	320	630	14,2	15,6	1 700	700
644,6	765,4	3	400	780	17,5	15,9	1 600	830
644,6	765,4	3	400	780	17,5	15,9	1 600	830
648	832	4	480	1 000	21,7	16	1 500	750
653	827	5	630	1 320	28	16,4	1 500	840
653	827	5	630	1 320	28	16,4	1 500	840
653	827	5	630	1 320	28	16,4	1 500	840
653	827	5	630	1 320	28	16,4	1 500	840
653	897	5	585	1 250	25	16,3	1 400	770
658	892	6	880	1 900	41,5	16	1 300	800
658	892	6	880	1 900	41,5	16	1 300	800
668	912	6	815	1 760	36	16,2	1 300	–
673	897	5	750	1 630	33	16,4	1 400	–
673	897	5	750	1 630	33	16,4	1 400	–

Deep groove ball bearings

Single row

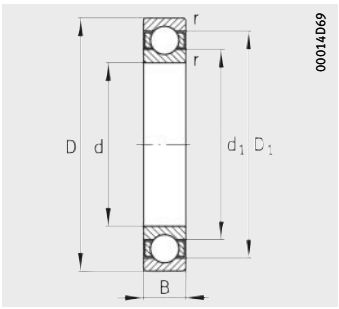

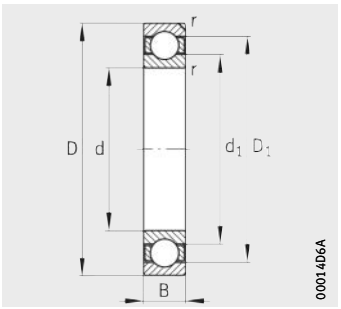

With retaining slot

Dimension table (continued) · Dimensions in mm

Designation	Mass	Dimensions					
	m	d	D	B	r	D_1	d_1
	≈kg				min.	≈	≈
608/670-M	59,6	**670**	820	48	3	765	726
618/670-M	80,4	**670**	820	69	4	770,3	721,1
618/670-MA	84,7	**670**	820	69	4	772	721,1
Z-509029.KL	118	**670**	850	85	6	792,5	727,5
609/670-M	144	**670**	900	73	5	816,7	755
619/670-M	192	**670**	900	103	6	822,2	749,5
619/670-MA	192	**670**	900	103	6	822,2	749,5
619/670-MB	192	**670**	900	103	6	822,2	749,5
619/670-MB-C3	192	**670**	900	103	6	822,2	749,5
160/670-M	272	**670**	980	100	6	867,5	785
60/670-M	350	**670**	980	136	7,5	884,2	769,4
60/670-MB-C3	350	**670**	980	136	7,5	884,2	769,4
608/710-M	69,9	**710**	870	50	4	812,7	770
618/710-M	96	**710**	870	74	4	818,9	762,7
618/710-MA	98,6	**710**	870	74	4	820,4	762,7
609/710-M	165	**710**	950	78	5	862	800
619/710-M	218	**710**	950	106	6	869,1	792,5
619/710-MA	218	**710**	950	106	6	869,1	792,5
619/710-MB	218	**710**	950	106	6	869,1	792,5
619/710-MB-C3	218	**710**	950	106	6	869,1	792,5
Z-502954.KL	368	**710**	1 000	140	7,5	911,5	800
160/710-M	305	**710**	1 030	103	6	914,5	828
60/710-M	394	**710**	1 030	140	7,5	931,1	812,6
60/710-MB-C3	394	**710**	1 030	140	7,5	931,1	812,6
Z-534196.KL[1)]	394	**710**	1 030	140	7,5	931,5	812,6
Z-528283.KL[1)]	534	**710**	1 080	160	7,5	962	826
608/750-M	84,4	**750**	920	54	4	859	812,4
618/750-M	114	**750**	920	78	5	864,9	806,7
618/750-MA	117	**750**	920	78	5	866,9	806,7
609/750-M	186	**750**	1 000	80	6	910	843
619/750-M	248	**750**	1 000	112	6	919,2	833,2
619/750-MA	248	**750**	1 000	112	6	919,2	833,2
619/750-MB	248	**750**	1 000	112	6	919,2	833,2
619/750-MB-C3	248	**750**	1 000	112	6	919,2	833,2

1) With retaining slot; radial internal clearance C4.

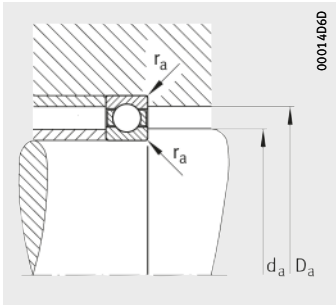

Mounting dimensions

Mounting dimensions			Basic load ratings		Fatigue limit load	Factor	Limiting speed	Reference speed
d_a	D_a	r_a	dyn. C_r	stat. C_{0r}	C_{ur}	f_0	n_G	n_B
min.	max.	max.	kN	kN	kN		min^{-1}	min^{-1}
682,4	807,6	2,5	325	655	14,4	15,6	1 600	630
684,6	805,4	3	405	815	17,7	15,8	1 500	770
684,6	805,4	3	405	815	17,7	15,8	1 500	770
693	827	5	550	1 180	24,5	16,1	1 500	–
688	882	4	520	1 120	23,6	16	1 400	670
693	877	5	640	1 370	27,5	16,3	1 400	780
693	877	5	640	1 370	27,5	16,3	1 400	780
693	877	5	640	1 370	27,5	16,3	1 400	780
693	877	5	640	1 370	27,5	16,3	1 400	780
693	957	5	655	1 460	28,5	16,3	1 300	720
698	952	6	965	2 160	46	16	1 300	750
698	952	6	965	2 160	46	16	1 300	750
724,6	855,4	3	355	735	16,1	15,6	1 400	600
724,6	855,4	3	465	980	20	15,9	1 400	720
724,6	855,4	3	465	980	20	15,9	1 400	720
728	932	4	530	1 160	24,1	16	1 300	630
733	927	5	680	1 530	30	16,3	1 300	730
733	927	5	680	1 530	30	16,3	1 300	730
733	927	5	680	1 530	30	16,3	1 300	730
733	927	5	680	1 530	30	16,3	1 300	730
738	972	6	930	2 200	44,5	16,3	1 300	–
733	1 007	5	710	1 600	30,5	16,3	1 300	670
738	1 002	6	1 020	2 320	48	16	1 200	700
738	1 002	6	1 020	2 320	48	16	1 200	700
738	1 002	6	1 020	2 320	48	16	1 200	–
785	1 005	7,5	1 140	2 700	55	15,8	1 200	–
764,6	905,4	3	380	830	17,2	15,6	1 300	560
768	902	4	510	1 120	22,6	15,9	1 300	680
768	902	4	510	1 120	22,6	15,9	1 300	680
773	977	5	585	1 340	26	16	1 300	600
773	977	5	720	1 660	32,5	16,3	1 300	690
773	977	5	720	1 660	32,5	16,3	1 300	690
773	977	5	720	1 660	32,5	16,3	1 300	690
773	977	5	720	1 660	32,5	16,3	1 300	690

Deep groove ball bearings

Single row

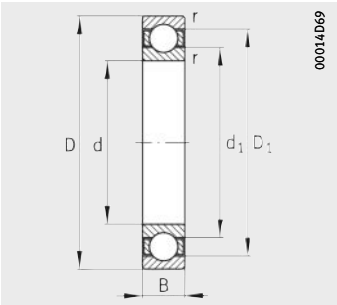

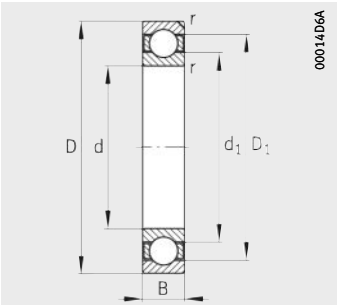

With retaining slot

Dimension table (continued) · Dimensions in mm

Designation	Mass	Dimensions					
	m	d	D	B	r	D_1	d_1
	≈kg				min.	≈	≈
Z-565323.KL[1]	312	**750**	1 016	125	6	933,8	839,3
160/750-M	362	**750**	1 090	109	7,5	966,5	876
60/750-M	469	**750**	1 090	150	7,5	985,3	858,4
60/750-MB-C3	469	**750**	1 090	150	7,5	985,3	858,4
Z-500909.KL[1]	451	**760**	1 080	150	7,5	984,5	858
F-800886.KL	120	**769**	940	78	5	885,5	827,2
Z-556478.KL	61,4	**800**	935	50	5	886,5	849,5
608/800-M	101	**800**	980	57	4	914,1	867,2
618/800-M	136	**800**	980	82	5	921,8	860
618/800-MA	136	**800**	980	82	5	923,5	860
609/800-M	212	**800**	1 060	82	6	965	898
619/800-M	283	**800**	1 060	115	6	976,7	886,2
619/800-MB	283	**800**	1 060	115	6	976,7	886,2
619/800-MB-C3	283	**800**	1 060	115	6	976,7	886,2
Z-526190.KL	313	**800**	1 080	115	6	989	891
160/800-M	403	**800**	1 150	112	7,5	1 024	929
60/800-M	532	**800**	1 150	155	7,5	1 038,2	911,5
60/800-MB-C3	532	**800**	1 150	155	7,5	1 038,2	911,5
F-801911.KL[1]	538	**800**	1 150	155	7,5	1 038	910
Z-572323.KL	278	**830**	1 080	115	6	1 003,8	909,3
608/850-M	106	**850**	1 030	57	4	966,2	915,4
618/850-M	144	**850**	1 030	82	5	971,9	910
618/850-MA	144	**850**	1 030	82	5	973,5	910
609/850-M	241	**850**	1 120	85	6	1 023	950
619/850-M	323	**850**	1 120	118	6	1 033,6	939,2
619/850-MB	323	**850**	1 120	118	6	1 033,6	939,2
619/850-MB-C3	323	**850**	1 120	118	6	1 033,6	939,2
160/850-M	476	**850**	1 220	118	7,5	1 086,5	987
60/850-M	626	**850**	1 220	165	7,5	1 105,9	968,1
60/850-MB-C3	626	**850**	1 220	165	7,5	1 105,9	968,1
Z-501657.KL[2]	642	**850**	1 220	165	7,5	1 105,9	966,8
Z-529055.KL[1]	337	**860**	1 130	120	7,5	1 044	945,5

[1] With retaining slot.

[2] With retaining slot; radial internal clearance 200...300 µm.

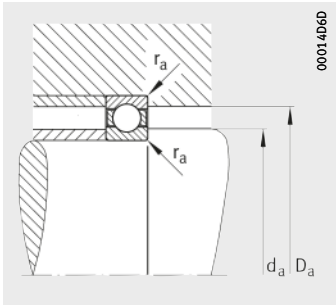

Mounting dimensions

Mounting dimensions			Basic load ratings		Fatigue limit load	Factor	Limiting speed	Reference speed
d_a	D_a	r_a	dyn. C_r	stat. C_{0r}	C_{ur}	f_0	n_G	n_B
min.	max.	max.	kN	kN	kN		min^{-1}	min^{-1}
773	993	5	830	2 000	38	16,4	1 300	–
778	1 062	6	750	1 730	32	16,3	1 200	640
778	1 062	6	1 100	2 650	52	16	1 100	670
778	1 062	6	1 100	2 650	52	16	1 100	670
788	1 052	6	1 080	2 600	49,5	16,1	1 100	–
787	922	4	510	1 140	23,1	15,8	1 300	–
818	917	4	305	670	14,7	15,4	1 300	–
814,6	965,4	3	430	980	19,7	15,6	1 300	530
818	962	4	550	1 270	23,8	15,8	1 300	630
818	962	4	550	1 270	23,8	15,8	1 300	630
823	1 037	5	610	1 430	27	15,9	1 200	560
823	1 037	5	800	1 900	34,5	16,3	1 200	630
823	1 037	5	800	1 900	34,5	16,3	1 200	630
823	1 037	5	800	1 900	34,5	16,3	1 200	630
823	1 057	5	865	2 080	38,5	16,4	1 100	–
828	1 122	6	815	2 000	35,5	16,3	1 100	590
828	1 122	6	1 140	2 800	55	16,1	1 100	630
828	1 122	6	1 140	2 800	55	16,1	1 100	630
828	1 122	6	1 140	2 800	55	16,1	1 100	–
853	1 057	5	850	2 080	38	16,3	1 100	–
864,6	1 015,4	3	430	1 000	18,4	15,5	1 200	480
868	1 012	4	560	1 290	23,9	15,8	1 200	580
868	1 012	4	560	1 290	23,9	15,8	1 200	580
873	1 097	5	670	1 630	27	15,9	1 100	530
873	1 097	5	850	2 080	37	16,2	1 100	590
873	1 097	5	850	2 080	37	16,2	1 100	590
873	1 097	5	850	2 080	37	16,2	1 100	590
878	1 192	6	865	2 200	38,5	16,2	1 100	550
878	1 192	6	1 220	3 150	57	16,2	1 000	600
878	1 192	6	1 220	3 150	57	16,2	1 000	600
878	1 192	6	1 220	3 150	57	16,2	1 000	–
888	1 102	6	930	2 360	50	16,4	1 100	–

Deep groove ball bearings

Single row

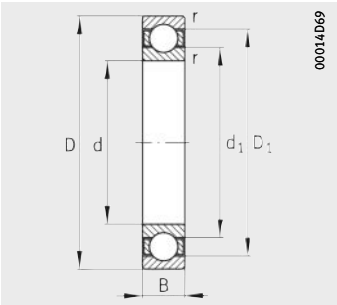

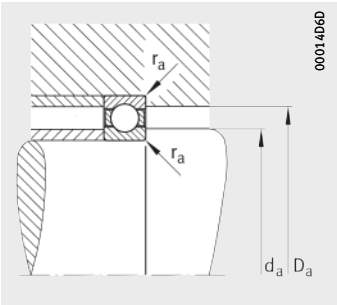

Mounting dimensions

Dimension table (continued) · Dimensions in mm

Designation	Mass	Dimensions					
	m	d	D	B	r	D_1	d_1
	≈kg				min.	≈	≈
608/900-M	115	**900**	1 090	60	5	1 022	970
618/900-M	169	**900**	1 090	85	5	1 024,8	965,9
609/900-M	280	**900**	1 180	88	6	1 078,1	1 002
619/900-M	352	**900**	1 180	122	6	1 090,5	991,5
160/900-M	532	**900**	1 280	122	7,5	1 143	1 040,5
60/900-M	705	**900**	1 280	170	7,5	1 161,1	1 022,5
608/950-M	141	**950**	1 150	63	5	1 079	1 023
618/950-M	198	**950**	1 150	90	5	1 082,9	1 017,7
F-807431.KL	259	**950**	1 200	90	5	1 085,6	1 014,6
609/950-M	335	**950**	1 250	95	6	1 141	1 061
619/950-M	443	**950**	1 250	132	7,5	1 152,2	1 050,7
Z-532248.KL	722	**950**	1 320	170	10	1 208	1 066
160/950-M	658	**950**	1 360	132	7,5	1 212	1 101,5
60/950-M	856	**950**	1 360	180	7,5	1 236	1 078,5
608/1000-M	192	**1 000**	1 220	71	5	1 140,5	1 081
618/1000-M	254	**1 000**	1 220	100	6	1 147,8	1 073,3
618/1000-MA	256	**1 000**	1 220	100	6	1 150	1 073,3
609/1000-M	407	**1 000**	1 320	103	6	1 204	1 120
619/1000-M	531	**1 000**	1 320	140	7,5	1 220,7	1 102,4
F-804593.KL	594	**1 000**	1 380	122	6	1 240,6	1 142,1
Z-528268.KL	657	**1 000**	1 380	180	7,5	1 263	1 121,5
160/1000-M	726	**1 000**	1 420	136	7,5	1 279	1 164,5
60/1000-M	944	**1 000**	1 420	185	7,5	1 291	1 133,5
Z-529852.KL	263	**1 030**	1 250	100	5	1 180	1 102
608/1060-M	202	**1 060**	1 280	71	5	1 200,5	1 141
618/1060-M	269	**1 060**	1 280	100	6	1 207,5	1 133,7
618/1060-MA	270	**1 060**	1 280	100	6	1 210	1 133,7
609/1060-M	485	**1 060**	1 400	109	7,5	1 278	1 186
619/1060-M	640	**1 060**	1 400	150	7,5	1 289,9	1 172,9
160/1060-M	834	**1 060**	1 500	140	9,5	1 343,5	1 221
60/1060-M	1 100	**1 060**	1 500	195	9,5	1 365	1 200



Mounting dimensions			Basic load ratings		Fatigue limit load	Factor	Limiting speed	Reference speed
d_a	D_a	r_a	dyn. C_r	stat. C_{0r}	C_{ur}	f_0	n_G	n_B
min.	max.	max.	kN	kN	kN		min^{-1}	min^{-1}
918	1 072	4	480	1 180	22,7	15,5	1 100	450
918	1 072	4	570	1 370	27	15,7	1 100	550
923	1 157	5	720	1 800	33	15,9	1 100	480
923	1 157	5	900	2 280	50	16,2	1 000	550
928	1 252	6	900	2 320	40	16,2	1 000	520
928	1 252	6	1 290	3 400	60	16,3	950	560
968	1 132	4	520	1 290	23,8	15,5	1 100	430
968	1 132	4	655	1 660	30,5	15,8	1 100	510
968	1 182	4	655	1 660	29	15,8	1 100	–
973	1 227	5	780	2 040	37	15,9	1 000	450
978	1 222	6	965	2 550	43,5	16,2	950	520
986	1 284	8	1 320	3 650	44	16,4	900	–
978	1 332	6	1 000	2 700	45,5	16,2	950	490
978	1 332	6	1 430	3 900	68	16,1	900	530
1 018	1 202	4	585	1 500	27,5	15,6	1 000	430
1 023	1 197	5	735	1 930	34	15,8	1 000	495
1 023	1 197	5	735	1 930	34	15,8	1 000	495
1 028	1 292	6	830	2 240	40	15,9	950	450
1 028	1 292	6	1 160	3 250	54	16,3	900	485
1 023	1 357	5	950	2 550	42,5	16	900	–
1 028	1 352	6	1 370	3 900	64	16,4	900	–
1 028	1 392	6	1 060	2 900	47	16,2	900	455
1 028	1 392	6	1 500	4 150	70	16,3	850	500
1 048	1 232	4	720	1 860	31,5	15,8	950	–
1 078	1 262	4	585	1 500	27,5	15,6	950	380
1 083	1 257	5	765	2 040	35,5	15,8	950	460
1 083	1 257	5	765	2 040	35,5	15,8	950	460
1 088	1 372	6	930	2 600	44	15,9	900	400
1 088	1 372	6	1 140	3 250	52	16,2	850	465
1 094	1 466	8	1 160	3 350	53	16,2	850	430
1 094	1 466	8	1 600	4 650	76	16,3	800	450

Deep groove ball bearings

Single row

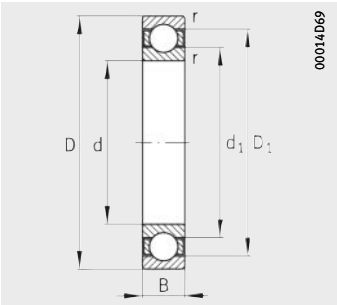

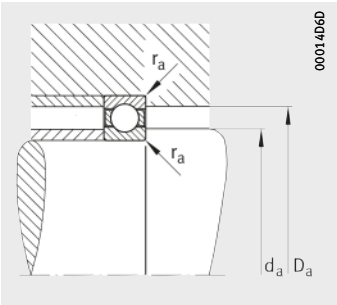

Mounting dimensions

Dimension table (continued) · Dimensions in mm

Designation	Mass	Dimensions					
	m	d	D	B	r	D_1	d_1
	≈kg				min.	≈	≈
608/1120-M	259	**1 120**	1 360	78	5	1 274	1 209
618/1120-M	329	**1 120**	1 360	106	6	1 281,1	1 200,8
618/1120-MA	337	**1 120**	1 360	106	6	1 284	1 200,8
609/1120-M	509	**1 120**	1 460	109	7,5	1 338	1 246
619/1120-M	661	**1 120**	1 460	150	7,5	1 349	1 235
160/1120-M	954	**1 120**	1 580	145	9,5	1 415	1 289
60/1120-M	1 250	**1 120**	1 580	200	9,5	1 439	1 266
608/1180-M	259	**1 180**	1 420	78	5	1 334	1 269
618/1180-M	357	**1 180**	1 420	106	6	1 341,7	1 258,7
618/1180-MA	377	**1 180**	1 420	106	6	1 344	1 258,7
609/1180-M	600	**1 180**	1 540	115	7,5	1 411	1 312
619/1180-M	797	**1 180**	1 540	160	7,5	1 423	1 301
160/1180-M	1 110	**1 180**	1 660	155	9,5	1 489,5	1 355
60/1180-M	1 450	**1 180**	1 660	212	9,5	1 512	1 332
608/1250-M	293	**1 250**	1 500	80	6	1 409,5	1 343
618/1250-M	401	**1 250**	1 500	112	6	1 418,8	1 333,9
618/1250-MA	401	**1 250**	1 500	112	6	1 421,1	1 333,9
609/1250-M	711	**1 250**	1 630	122	7,5	1 493	1 391
619/1250-M	933	**1 250**	1 630	170	7,5	1 507	1 377
60/1250-M	1 650	**1 250**	1 750	218	9,5	1 598	1 408
608/1320-M	399	**1 320**	1 600	88	6	1 498,5	1 424
618/1320-M	523	**1 320**	1 600	122	6	1 504,7	1 416,9
618/1320-MA	525	**1 320**	1 600	122	6	1 508	1 416,9
609/1320-M	830	**1 320**	1 720	128	7,5	1 576	1 468
619/1320-M	1 070	**1 320**	1 720	175	7,5	1 590	1 454
60/1320-M	1 950	**1 320**	1 850	230	12	1 686	1 488
608/1400-M	472	**1 400**	1 700	95	6	1 591,5	1 511
618/1400-M	640	**1 400**	1 700	132	7,5	1 602	1 501,1
618/1400-MA	643	**1 400**	1 700	132	7,5	1 604,5	1 501,1
619/1400-M	1 260	**1 400**	1 820	185	9,5	1 684	1 540
60/1400-M	2 250	**1 400**	1 950	243	12	1 784	1 573



Mounting dimensions			Basic load ratings		Fatigue limit load	Factor	Limiting speed	Reference speed
d_a	D_a	r_a	dyn. C_r	stat. C_{0r}	C_{ur}	f_0	n_G	n_B
min.	max.	max.	kN	kN	kN		min^{-1}	min^{-1}
1 138	1 342	4	670	1 830	31,5	15,5	900	360
1 143	1 337	5	815	2 240	36	15,8	900	430
1 143	1 337	5	815	2 240	36	15,8	900	430
1 148	1 432	6	950	2 650	45	15,9	850	380
1 148	1 432	6	1 160	3 400	53	16,2	800	435
1 154	1 546	8	1 220	3 550	54	16,2	800	405
1 154	1 546	8	1 760	5 400	87	16,3	750	430
1 198	1 402	4	670	1 930	33	15,5	850	340
1 203	1 397	5	830	2 360	37,5	15,7	850	405
1 203	1 397	5	830	2 360	37,5	15,7	850	405
1 208	1 512	6	1 060	3 150	50	15,9	800	360
1 208	1 512	6	1 290	3 800	60	16,2	750	410
1 214	1 626	8	1 320	4 000	61	16,2	750	380
1 214	1 626	8	1 860	5 850	90	16,3	700	400
1 273	1 477	5	710	2 080	34	15,5	800	320
1 273	1 477	5	900	2 600	39,5	15,7	800	380
1 273	1 477	5	900	2 600	39,5	15,7	800	380
1 278	1 602	6	1 100	3 350	53	15,9	750	340
1 278	1 602	6	1 400	4 300	67	16,2	700	385
1 284	1 716	8	2 000	6 400	96	16,4	670	380
1 343	1 577	5	815	2 500	40	15,5	750	300
1 343	1 577	5	950	2 850	45,5	15,7	750	360
1 343	1 577	5	950	2 850	45,5	15,7	750	360
1 348	1 692	6	1 200	3 750	57	15,9	700	320
1 348	1 692	6	1 530	4 900	71	16,2	700	360
1 362	1 808	10	2 120	7 100	104	16,4	670	360
1 423	1 677	5	900	2 800	43	15,5	700	280
1 428	1 672	6	1 040	3 200	46,5	15,8	700	340
1 428	1 672	6	1 040	3 200	46,5	15,8	700	340
1 434	1 786	8	1 630	5 400	80	16,2	670	335
1 442	1 908	10	2 320	8 000	114	16,4	630	340

Deep groove ball bearings

Single row

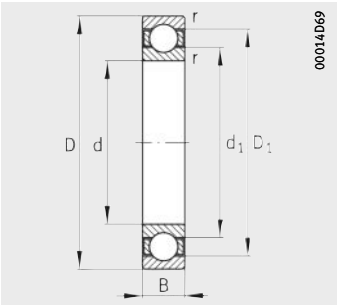

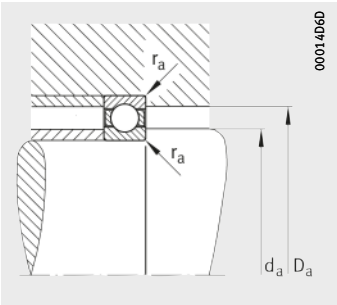

Mounting dimensions

Dimension table (continued) · Dimensions in mm

Designation	Mass	Dimensions					
	m	d	D	B	r	D_1	d_1
	≈kg				min.	≈	≈
Z-563867.KL	419	**1 500**	1 750	100	6	1 663	1 589
Z-547707.KL	696	**1 500**	1 820	125	7,5	1 715	1 606,5
618/1500-M	778	**1 500**	1 820	140	7,5	1 715,1	1 608,1
618/1500-MA	792	**1 500**	1 820	140	7,5	1 718,7	1 608,1
619/1500-M	1 530	**1 500**	1 950	195	9,5	1 805	1 650
60/1500-M	3 070	**1 500**	2 120	272	12	1 932	1 696
619/1600-M	1 690	**1 600**	2 060	200	9,5	1 914	1 752
60/1600-M	3 460	**1 600**	2 240	280	12	2 045	1 803
619/1700-M	1 980	**1 700**	2 180	212	9,5	2 027	1 859
F-809025.KL	1 960	**1 700**	2 180	212	7,5	2 036	1 847
60/1700-M	3 900	**1 700**	2 360	290	15	2 158	1 910
619/1800-M	2 250	**1 800**	2 300	218	9,5	2 144,9	1 960,5
60/1800-M	4 660	**1 800**	2 500	308	15	2 292	2 018
619/1900-M	2 660	**1 900**	2 430	230	12	2 265	2 072
Z-541682.KL	1 440	**2 000**	2 360	190	9,5	2 260	2 120



Mounting dimensions			Basic load ratings		Fatigue limit load	Factor	Limiting speed	Reference speed
d_a	D_a	r_a	dyn. C_r	stat. C_{0r}	C_{ur}	f_0	n_G	n_B
min.	max.	max.	kN	kN	kN		min^{-1}	min^{-1}
1 523	1 727	5	510	1 290	20,6	15,4	670	–
1 528	1 792	6	1 160	3 750	55	15,8	670	–
1 528	1 792	6	1 160	3 750	55	15,8	670	315
1 528	1 792	6	1 160	3 750	55	15,8	670	315
1 534	1 916	8	1 830	6 300	87	16,2	630	310
1 542	2 078	10	2 600	9 300	130	16,3	600	300
1 634	2 026	8	1 900	6 800	95	16,2	600	285
1 642	2 198	10	2 800	10 600	140	16,4	560	280
1 734	2 146	8	2 000	7 350	94	16,1	560	270
1 728	2 152	6	2 160	8 000	104	16,2	560	260
1 750	2 310	12	2 900	11 200	147	16,4	530	260
1 842	2 258	10	2 200	8 300	105	16,2	560	249
1 850	2 450	12	3 350	13 400	167	16,3	530	240
1 942	2 388	10	2 400	9 500	118	16,2	530	233
2 034	2 326	8	1 460	5 600	61	15,6	530	–

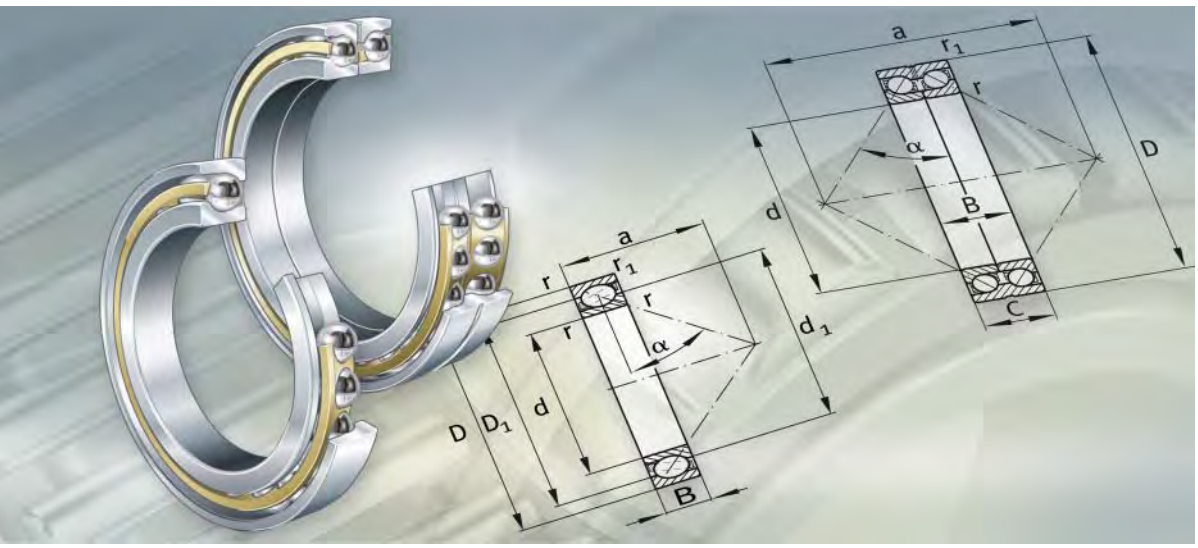

Angular contact ball bearings

Single row
Double row

Angular contact ball bearings

Single row angular contact ball bearings

..... 220

In single row angular contact ball bearings, the raceways are arranged such that the forces are transmitted from one raceway to the other at a specific contact angle (oblique to the radial plane).

The axial load carrying capacity increases with the contact angle. Due to the large contact angle, single row angular contact ball bearings are more suitable than deep groove ball bearings for supporting large axial forces acting in one direction.

Single row angular contact ball bearings can support radial loads and unilateral axial loads. They are adjusted against a second bearing that provides counterguidance.

Single row angular contact ball bearings with standardised main dimensions and standardised designations to DIN 628-1 are used, for example, in gearboxes, rolling mills and electrical machinery.

Special bearings with non-standardised designations (Z-5..SKL or F-8..SKL) and main dimensions are also available.
Such bearings with an extended inner ring are used, for example, as axial bearings for oil film bearings.

Double row angular contact ball bearings

..... 248

Double row angular contact ball bearings are similar in design to a pair of single row angular contact ball bearings in an O arrangement or an X arrangement. In this case, the apexes of the cones formed by the ball contact lines point outwards or inwards.

Double row bearings can support radial forces as well as axial forces in both directions and are particularly suitable for rigid axial guidance arrangements.

All the double row angular contact ball bearings described here are special bearings with non-standardised main dimensions and designations (Z-5..SKL).

Bearings with a split outer ring (X arrangement) or a split inner ring (O arrangement) are used, for example, as axial bearings in wire rolling mills.

Bearings in an O arrangement with an extended inner ring are frequently used as axial bearings for oil film bearings.

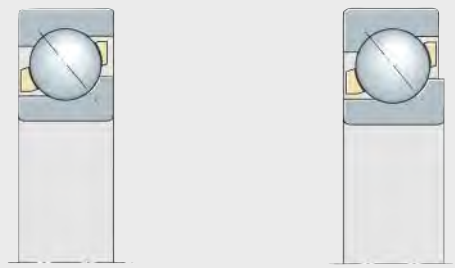

00014D79

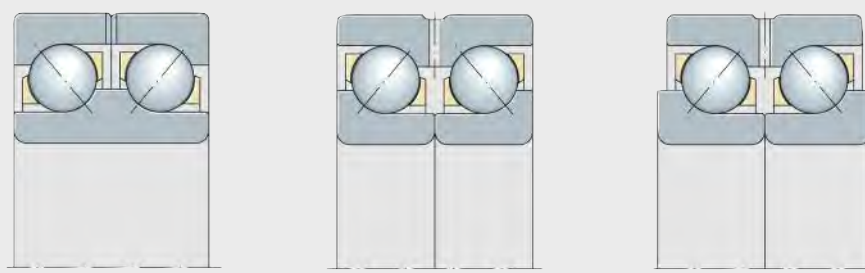

00014D85

FAG

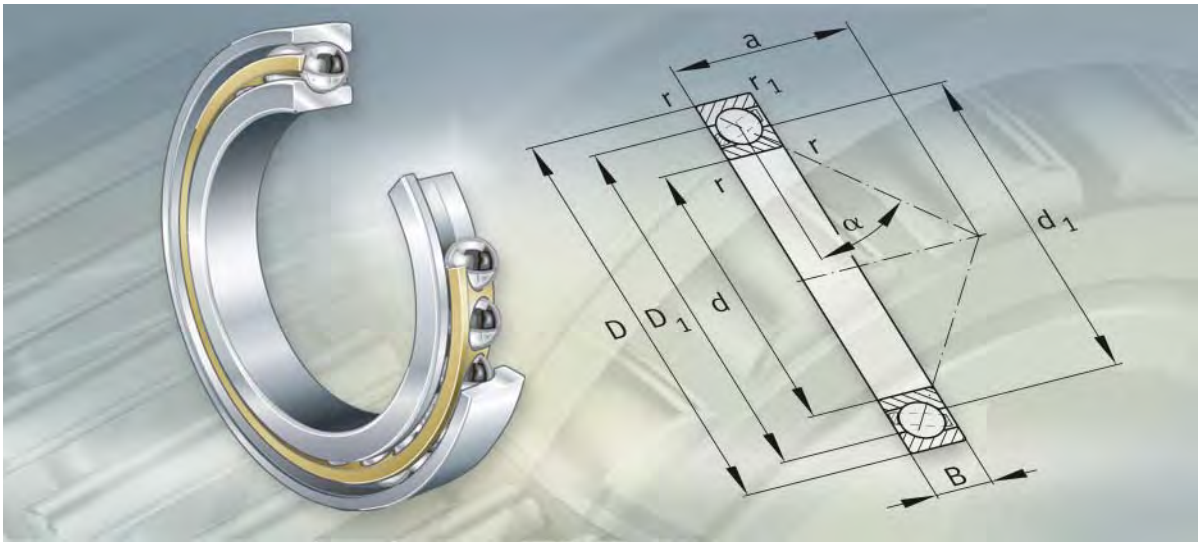

Single row angular contact ball bearings

Single row angular contact ball bearings

		Page
Product overview	Single row angular contact ball bearings	222
Features	Radial and axial load capacity	223
	Universal design	223
	Matched bearings	223
	Sealing	224
	Lubrication	224
	Operating temperature	224
	Cages	224
	Suffixes	224
Design and safety guidelines	Calculation of axial force	225
	Equivalent dynamic bearing load	226
	Equivalent static bearing load	227
	Basic dynamic and static load ratings for bearing pairs	228
	Minimum radial load	228
	Speeds	228
	Design of bearing arrangements	229
Accuracy	Tolerances for universal designs and for matched bearings	229
	Axial internal clearance or preload of universal design	230
Dimension tables	Angular contact ball bearings, single row	232

Single row

Contact angle α = 40°

Contact angle α = 30°

70..-B, 72..-B, 73..-B,
Z-5..SKL1-01, F-8..SKL1-01



708, 709, 718, 719, 70,
Z-5..SKL1-02, F-8..SKL1-02



With extended inner ring

Contact angle α = 40°

Z-5..SKL1-03



Single row angular contact ball bearings

Features

Single row angular contact ball bearings are, with a few exceptions, self-retaining units with solid inner and outer rings and ball and cage assemblies with cages. The raceways of the inner and outer rings are offset from each other along the bearing axis.
The angular adjustment facility of these bearings is very limited.

Radial and axial load capacity

Single row angular contact ball bearings can support axial forces in one direction and high radial forces. They must be axially adjusted against a second bearing mounted in a mirror image arrangement.

The axial load carrying capacity is dependent on the contact angle. Bearings with a contact angle 40° have a higher axial load carrying capacity than those with a contact angle 30°.

Universal design

Single row angular contact ball bearings of the universal design have the suffix UA, UL or UO and are intended for mounting in pairs in an X, O or tandem arrangement or mounting in groups.
These bearings can be mounted in any arrangement required.

The suffix UA indicates slight axial internal clearance, the suffix UL indicates slight preload and the suffix UO indicates freedom from clearance in an X or O arrangement.

When ordering bearings, the total quantity of bearings must be stated, not the number of bearing pairs or bearing groups.

Matched bearings

Sets without an intermediate ring are available in an O arrangement (DB), X arrangement (DF) or tandem arrangement (DT), *Figure 1*.

When ordering bearings, the number of sets must be stated, not the number of individual bearings.

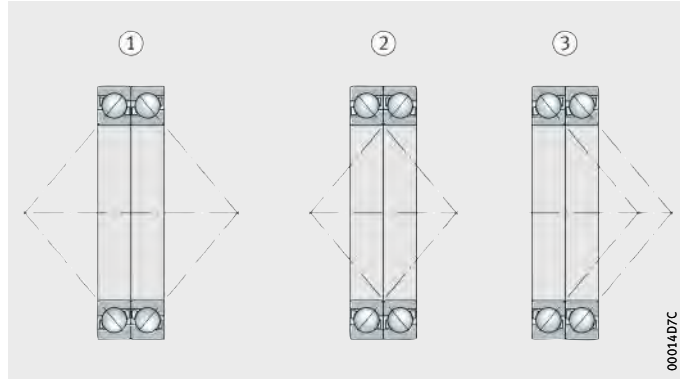

① O arrangement, DB
② X arrangement, DF
③ Tandem arrangement, DT

Figure 1
Matched sets

Sealing

The bearings are not sealed.

Lubrication

Single row angular contact ball bearings can be lubricated with grease or oil.

Operating temperature

Angular contact ball bearings without seals can be used at operating temperatures from –30 °C to +150 °C.

Bearings with a diameter D > 240 mm are dimensionally stable up to +200 °C.

Cages

Angular contact ball bearings with ball-guided solid window cages made from brass have, in the case of bearings of standardised series, the suffix MP.

The suffixes MPA or MPB(S) indicate bearings with a solid window cage made from brass that is guided on the outer ring or inner ring.

In the case of bearings with non-standardised designations (Z-5..SKL or F-8..SKL), an enquiry can be placed with us for the cage design.

Suffixes

Suffixes for the available designs of standard bearings: see table.

Available designs

Suffix[1)]	Description	Design
B	Modified internal construction	Standard
DB	Two angular contact ball bearings in O arrangement, matched clearance-free	Special design, available by agreement only
DF	Two angular contact ball bearings in X arrangement, matched clearance-free	
DT	Two angular contact ball bearings in tandem arrangement, matched	
MP	Solid brass cage	Standard
MPA	Solid brass cage, guided on outer ring	Special design, available by agreement only
MPB	Solid brass cage, guided on inner ring	
MPBS	Solid brass cage, guided on inner ring, with lubrication slots	
P5	Bearings in tolerance class P5	
UA	Universal design for mounting in pairs, bearing pair has small axial internal clearance in O and X arrangement	Standard
UL	Universal design for mounting in pairs, bearing pair has slight preload in O and X arrangement	
UO	Universal design for mounting in pairs, bearing pair is clearance-free in O and X arrangement	

1) In the case of angular contact ball bearings with non-standardised designations, the design (for example cage, accuracy) is specified in the designation (Z-5 or F-8). In the case of these bearings, additional suffixes are only used for deviations from the original design.

Design and safety guidelines
Calculation of axial force

Under radial load, an internal axial force is induced in the bearing that must be supported by a second bearing and taken into consideration when calculating the equivalent bearing load.

Depending on the bearing arrangement (O or X arrangement), the axial force must first be determined for bearings adjusted clearance-free without preload, *Figure 2*, *Figure 3* and table Load ratio and axial bearing load, page 226.

The following preconditions apply:

- The radial forces act at the central pressure points and are positive.
- Bearing A is subjected to a radial load F_{rA}, bearing B to a load F_{rB}.
- F is an external axial force acting on bearing A.

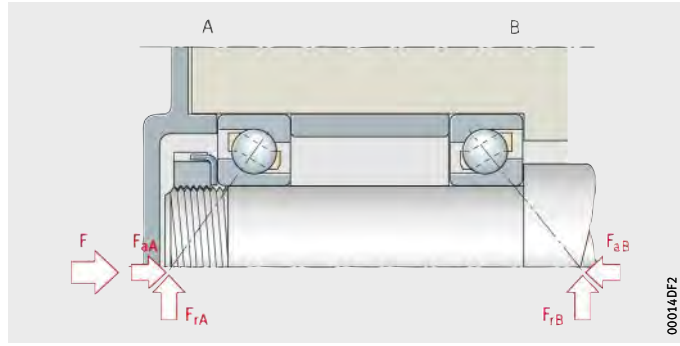

Figure 2
Bearings in O arrangement

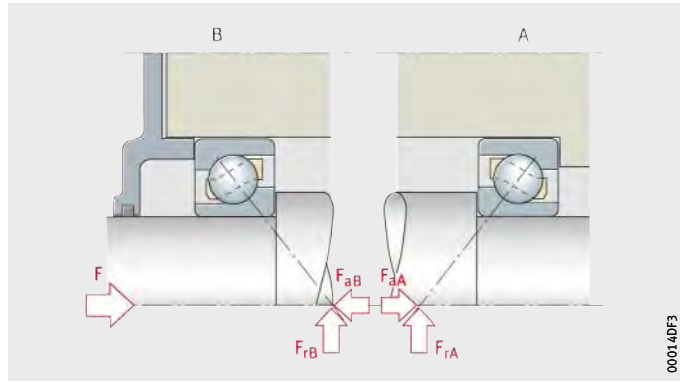

Figure 3
Bearings in X arrangement

Load ratio and axial bearing load

Load ratio[3]		Axial force F_a[1)3)]	
Radial bearing load	External axial force	Bearing A	Bearing B
$\frac{F_{rA}}{Y_A} \leqq \frac{F_{rB}}{Y_B}$	$F \geqq 0$	$F_a = F + 0,5 \cdot \frac{F_{rB}}{Y_B}$	2)
$\frac{F_{rA}}{Y_A} > \frac{F_{rB}}{Y_B}$	$F > 0,5 \cdot \left(\frac{F_{rA}}{Y_A} - \frac{F_{rB}}{Y_B} \right)$	$F_a = F + 0,5 \cdot \frac{F_{rB}}{Y_B}$	2)
	$F \leqq 0,5 \cdot \left(\frac{F_{rA}}{Y_A} - \frac{F_{rB}}{Y_B} \right)$	2)	$F_a = 0,5 \cdot \frac{F_{rA}}{Y_A} - F$

1) Axial force F_a, to be used in calculation of the equivalent dynamic bearing load.

2) If no equation is given, the axial force is not taken into consideration.

3) For bearings with a contact angle 40° (e = 1,14), Y = 0,57 is used in the equations, for bearings with a contact angle 30° (e = 0,8) the value to be used is Y = 0,76.

Equivalent dynamic bearing load

The equivalent dynamic load P is valid for bearings that are subjected to radial and axial dynamic loads. It gives the same rating life as the combined bearing load occurring in practice.

For bearings under dynamic loading, the following applies:

Contact angle 40°

Arrangement of bearings	Load ratio	Equivalent dynamic load
Single bearing[1)]	$\frac{F_a}{F_r} \leqq 1,14$	$P = F_r$
	$\frac{F_a}{F_r} > 1,14$	$P = 0,35 \cdot F_r + 0,57 \cdot F_a$
Bearing pair in O or X arrangement	$\frac{F_a}{F_r} \leqq 1,14$	$P = F_r + 0,55 \cdot F_a$
	$\frac{F_a}{F_r} > 1,14$	$P = 0,57 \cdot F_r + 0,93 \cdot F_a$

1) Calculation of axial force for single bearings, see table Load ratio and axial bearing load.

P kN
Equivalent dynamic bearing load for combined load

F_a kN
Axial dynamic bearing load

F_r kN
Radial dynamic bearing load.

Contact angle 30°

For bearings under dynamic loading, the following applies:

Arrangement of bearings	Load ratio	Equivalent dynamic bearing load
Single bearing[1)]	$\frac{F_a}{F_r} \leqq 0,8$	$P = F_r$
	$\frac{F_a}{F_r} > 0,8$	$P = 0,39 \cdot F_r + 0,76 \cdot F_a$
Bearing pair in O or X arrangement	$\frac{F_a}{F_r} \leqq 0,8$	$P = F_r + 0,78 \cdot F_a$
	$\frac{F_a}{F_r} > 0,8$	$P = 0,63 \cdot F_r + 1,24 \cdot F_a$

1) Calculation of axial force for single bearings, see table Load ratio and axial bearing load, page 226.

P kN
Equivalent dynamic bearing load for combined load
F_a kN
Axial dynamic bearing load
F_r kN
Radial dynamic bearing load.

Equivalent static bearing load

The equivalent static load P_0 is valid for bearings that are subjected to radial and axial static loads. It induces the same load at the centre point of the most heavily loaded contact point between the rolling element and raceway as the combined bearing load occurring in practice.

Contact angle 40°

For bearings under static loading, the following applies:

Arrangement of bearings	Load ratio	Equivalent static load
Single bearing	$\frac{F_{0a}}{F_{0r}} \leqq 1,9$	$P_0 = F_{0r}$
	$\frac{F_{0a}}{F_{0r}} > 1,9$	$P_0 = 0,5 \cdot F_{0r} + 0,26 \cdot F_{0a}$
Bearing pair in O or X arrangement	–	$P_0 = F_{0r} + 0,52 \cdot F_{0a}$

P_0 kN
Equivalent static bearing load for combined load
F_{0a} kN
Axial static bearing load
F_{0r} kN
Radial static bearing load.

Contact angle 30°

Arrangement of bearings	Load ratio	Equivalent static load
Single bearing	$\frac{F_{0a}}{F_{0r}} \leqq 1,5$	$P_0 = F_{0r}$
	$\frac{F_{0a}}{F_{0r}} > 1,5$	$P_0 = 0,5 \cdot F_{0r} + 0,33 \cdot F_{0a}$
Bearing pair in O or X arrangement	–	$P_0 = F_{0r} + 0,66 \cdot F_{0a}$

P_0 kN
Equivalent static bearing load for combined load
F_{0a} kN
Axial static bearing load
F_{0r} kN
Radial static bearing load.

Basic dynamic and static load ratings for bearing pairs

If two bearings of the same size and design are mounted immediately adjacent to each other in an O or X arrangement, the basic dynamic load rating C_r and basic static load rating C_{0r} of the bearing pair are as follows:

- $C_r = 1,625 \cdot C_{r\ single\ bearing}$
- $C_{0r} = 2 \cdot C_{0r\ single\ bearing}$.

Minimum radial load

In order to ensure slippage-free operation, the bearings must be subjected to a minimum radial load. This applies particularly in the case of high speeds and high accelerations.
In continuous operation, ball bearings with cage must therefore be subjected to a minimum radial load of the order of $P/C_r > 0,01$.

Speeds

For standardised bearings, the dimension tables give the limiting speeds n_G and reference speeds n_B, while only the limiting speeds are given for the other bearings.

The limiting speeds n_G in the dimension tables must not be exceeded.

Bearings of universal design

Bearings with the suffix UA, UL or UO can be used in an X, O or tandem arrangement. The operating speed of the bearing pair is then approximately 20% below the calculated permissible operating speed of the single bearing.

The limiting speed n_G is possible if the less favourable thermal balance of the bearing pair is taken into consideration.

Design of bearing arrangements

Shaft and housing tolerances

Recommended shaft tolerances for bearings with cylindrical bore, see table, page 130.

Recommended housing tolerances for radial bearings, see table, page 131.

Mounting dimensions

The bearing tables give the maximum dimensions of the radii r_a and r_{a1} and the diameters of the abutment shoulders D_a, D_b and d_a.

Accuracy

Angular contact ball bearings with standardised main dimensions correspond to DIN 628-1.

The dimensional and geometrical tolerances of the standardised bearings correspond to tolerance class PN to DIN 620-2.
We can provide the tolerances of the non-standardised bearings in response to an enquiry.

Tolerances for universal designs and for matched bearings

In addition to normal tolerance (no tolerance suffix), angular contact ball bearings of the universal design UA, UL or UO are also available by agreement in the tolerance class P5 (suffix P5-UL or P5-UA).

Exceptions: Bore tolerances for bearings of all tolerance classes uniformly to P5 (no special suffix).

Width tolerances for universal bearings and matched bearings according to the following table:

Tolerance for ring width

Bore d mm		Width deviation Δ_{Bs} µm			
		PN		P5	
over	incl.	min.	max.	min.	max.
120	180	0	−500	0	−380
180	315	0	−500	0	−500
315	400	0	−630	0	−630

Axial internal clearance or preload of universal design

Axial internal clearance or preload of series 70..-B, 72..-B and 73..-B of universal design, in pairs in an X or O arrangement, see table.

The axial internal clearance or freedom from clearance do not apply to mounted bearing pairs. If rigid fits are used, this leads to reduced axial internal clearance or increased preload of the bearing pair.

Axial internal clearance and preload

Bore code	Axial internal clearance or preload of bearing pair Nominal dimension μm					Preload $F_{v\,max}$ N		
	UA	UO	UL			UL		
	70..-B, 72..-B, 73..-B		70..-B	72..-B	73..-B	70..-B	72..-B	73..-B
	Tolerance classes							
	PN, P6, P5		P5	P5	P5	P5	P5	P5
30	60	0	–	–13	–18	–	1723	2500
32	60	0	–	–13	–18	–	1815	2769
34	70	0	–	–14	–19	–	2038	3115
36	75	0	–	–14	–19	–	2115	3192
38	80	0	–	–14	–19	–	2308	3308
40	90	0	–	–13	–20	–	2462	3577
44	100	0	–	–16	–21	–	2808	4077
48	110	0	–	–15	–20	–	3350	4650
52	120	0	–	–18	–24	–	3750	5100
56	130	0	–	–18	–23	–	3900	5600
60	145	0	–	–17	–23	–	4300	5850
64	160	0	–	–19	–22	–	4650	6000

Tolerances for axial internal clearance or preload

Tolerances for axial internal clearance or preload of unmounted pairs of angular contact ball bearings of universal design in an X or O arrangement, see table.

Tolerances in μm

Bore code	70..-B, 72..-B		73..-B	
	Tolerance classes			
	PN, P6	P5	PN, P6	P5
12 to 36	+12	+10	+12	+10
38 to 64	+16	+14	+16	+14



Angular contact ball bearings

Single row

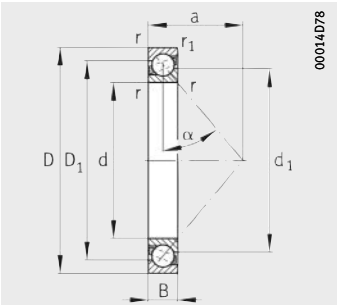

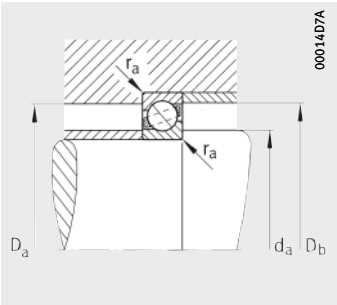

Mounting dimensions

Dimension table · Dimensions in mm

Designation	Mass	Dimensions								
	m	d	D	B	r	r_1	D_1	d_1	a	α
	≈kg				min.	min.	≈	≈	≈	°
7330-B-MP	24,8	**150**	320	65	4	1,5	255,8	218,3	131	40
7332-B-MP	29	**160**	340	68	4	1,5	270	231	139	40
7334-B-MP	34,4	**170**	360	72	4	1,5	290,9	249	147	40
7236-B-MP	17,5	**180**	320	52	4	1,5	265,8	237,4	131	40
7336-B-MP	39,9	**180**	380	75	4	1,5	303	259	155	40
7238-B-MP	21,1	**190**	340	55	4	1,5	281	250	139	40
7338-B-MP	45,9	**190**	400	78	5	2	318	273	163	40
7240-B-MP	25,6	**200**	360	58	4	1,5	297	264	146	40
7340-B-MP	52,2	**200**	420	80	5	2	336,6	288,9	170	40
7044-B-MP	17,2	**220**	340	56	3	1,1	293,8	269	109	40
Z-576434.SKL[1]	18,2	**220**	340	56	3	1,1	293,7	–	109	40
7044-MP	17,3	**220**	340	56	3	1,1	292	268	109	30
7244-B-MP	35,1	**220**	400	65	4	1,5	329,5	294,5	163	40
7344-B-MP	68,3	**220**	460	88	5	2	365,7	315	187	40
70948-MP	5,89	**240**	320	25	1,5	1	287	272,3	93	30
71948-MP	7,21	**240**	320	38	2,1	1,1	288	271	100	30
7048-B-MP	18,6	**240**	360	56	3	1,1	313,8	289,1	154	40
7048-MP	18,6	**240**	360	56	3	1,1	317,2	285,6	115	30
7248-B-MP	47,5	**240**	440	72	4	1,5	361	320	179	40
7348-B-MP	87,1	**240**	500	95	5	2	397	343	203	40
Z-507342.01.SKL[2]	9,46	**250**	340	35 /38[3]	2,1	1,5	304	286	195	40
70852-MP	3,45	**260**	320	19	1	0,6	295,7	284,3	93	30
71852-MP	4,64	**260**	320	28	2	1	296	284	98	30
70952-MP	10,1	**260**	360	31	2	1	320	300,3	105	30
71952-MP	11,7	**260**	360	46	2,1	1,1	324,1	298,2	112	30
7052-MP	27,5	**260**	400	65	4	1,5	349,3	313,7	128	30
7252-B-MP	62,5	**260**	480	80	5	2	393	348	195	40
7352-B-MP	109	**260**	540	102	6	3	431	371	219	40

1) With MPB cage.

2) With MP cage.

3) The outer ring is 35 mm wide, the inner ring is 38 mm wide.

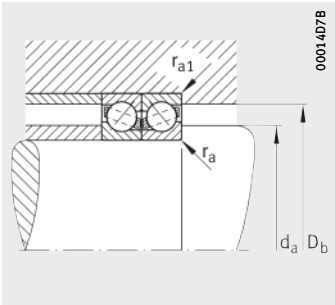

Mounting dimensions

Mounting dimensions					Basic load ratings		Calculation factors				Fatigue limit load	Limiting speed	Reference speed
d_a	D_a	D_b	r_a	r_{a1}	dyn. C_r	stat. C_{0r}	e	X	Y	Y_0	C_{ur}	n_G	n_B
min.	max.	max.	max.	max.	kN	kN					kN	min^{-1}	min^{-1}
167	303	311	3	1,5	325	390	1,14	0,35	0,57	0,26	14,2	3 800	2 200
177	323	331	3	1,5	360	450	1,14	0,35	0,57	0,26	15,1	3 600	2 040
187	343	351	3	1,5	405	530	1,14	0,35	0,57	0,26	18,1	3 200	1 840
197	303	311	3	1,5	275	345	1,14	0,35	0,57	0,26	12,1	3 600	2 290
197	363	371	3	1,5	415	560	1,14	0,35	0,57	0,26	18,4	3 000	1 760
207	323	331	3	1,5	300	390	1,14	0,35	0,57	0,26	13,2	3 200	2 140
210	380	389	4	2	430	600	1,14	0,35	0,57	0,26	18,7	2 800	1 680
217	343	351	3	1,5	320	430	1,14	0,35	0,57	0,26	14	3 000	2 010
220	400	409	4	2	465	655	1,14	0,35	0,57	0,26	20,4	2 800	1 560
232,4	327,6	334	2,5	1	255	355	1,14	0,35	0,57	0,26	11,5	3 000	2 080
232,4	327,6	334	2,5	1	255	355	1,14	0,35	0,57	0,26	11,5	3 000	–
232,4	327,6	334	2,5	1	285	390	0,8	0,39	0,76	0,33	12,8	3 000	–
237	383	391	3	1,5	365	530	1,14	0,35	0,57	0,26	16,5	2 800	1 790
240	440	449	4	2	530	780	1,14	0,35	0,57	0,26	23,4	2 800	1 400
247	313	315,4	1,5	1	125	186	0,8	0,39	0,76	0,33	6,5	3 000	–
250,2	309,8	314	2,1	1	190	260	0,8	0,39	0,76	0,33	8,9	3 000	–
252,4	347,6	354	2,5	1	270	390	1,14	0,35	0,57	0,26	12,2	2 800	1 890
252,4	347,6	354	2,5	1	300	430	0,8	0,39	0,76	0,33	13,7	2 800	–
257	423	431	3	1,5	440	670	1,14	0,35	0,57	0,26	22,3	2 800	1 520
260	480	489	4	2	600	950	1,14	0,35	0,57	0,26	29	2 600	1 220
260,2	333	333	2,1	1,5	186	255	1,14	0,35	0,57	0,26	7,9	2 800	–
264,6	315,4	316,8	1	0,6	76,5	125	0,8	0,39	0,76	0,33	3,8	3 000	–
268,8	311,2	315,4	2	1	122	190	0,8	0,39	0,76	0,33	6,3	3 000	–
268,8	351,2	355,4	2	1	186	270	0,8	0,39	0,76	0,33	8,8	2 800	–
270,2	349,8	354	2,1	1	255	375	0,8	0,39	0,76	0,33	11,9	2 800	–
274,6	385,4	393	3	1,5	365	560	0,8	0,39	0,76	0,33	16,7	2 800	–
280	460	469	4	2	490	765	1,14	0,35	0,57	0,26	21,7	2 600	1 460
286	514	526	5	2,5	655	1 060	1,14	0,35	0,57	0,26	30	2 400	1 140

Angular contact ball bearings

Single row

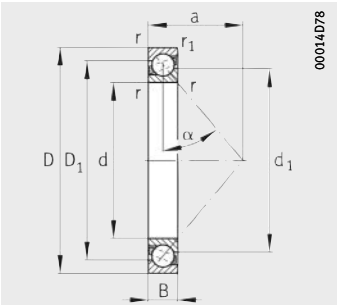

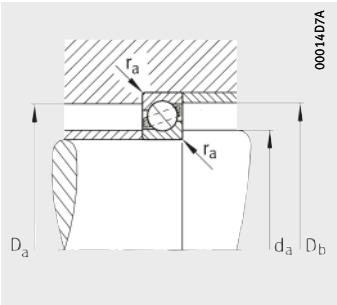

Mounting dimensions

Dimension table (continued) · Dimensions in mm

Designation	Mass	Dimensions								
	m	d	D	B	r	r_1	D_1	d_1	a	α
	≈kg				min.	min.	≈	≈	≈	°
70856-MP	5,07	**280**	350	22	1,1	0,6	321,7	308,3	102	30
71856-MP	6,86	**280**	350	33	2	1	323,9	307,8	107	30
F-801617.01.SKL[1]	9,17	**280**	370	40	3	1,1	336	316,4	114	30
70956-MP	10,8	**280**	380	31	2	1	340	320,3	111	30
71956-MP	14,1	**280**	380	46	2,1	1,1	344	318,3	118	30
7056-MP	29,2	**280**	420	65	4	1,5	369,2	333,7	133	30
7256-B-MP	58,8	**280**	500	80	5	2	413	368	204	40
F-804601.SKL[2]	134	**280**	579	108	6	3	460,5	400	234	40
7356-B-MP	134	**280**	580	108	6	3	464,5	402,5	234	40
Z-507343.01.SKL[2]	13,6	**285**	380	46	2,1	1	342	323	150	40
F-800060.SKL[3]	14,7	**285**	380	46	2,1	2,1	344,9	318,3	118	30
70860-MP	7,11	**300**	380	25	1,5	1	346,8	334,5	111	30
71860-MP	9,67	**300**	380	38	2,1	1,1	349,1	331	117	30
70960-MP	16,8	**300**	420	37	2,1	1	372	348	112	30
71960-MP	22,3	**300**	420	56	3	1,1	377,1	345,6	132	30
7060-B-MP	41,5	**300**	460	74	4	1,5	398,4	365,6	196	40
F-804853.SKL[2]	41,4	**300**	460	74	4	1,5	398,4	365,6	196	40
7060-MP	41	**300**	460	74	4	1,5	402,9	360,6	147	30
7260-B-MP	83,8	**300**	540	85	5	2	444,5	397	219	40
7360-B-MP	157	**300**	620	109	7,5	4	493,5	428	247	40
70864-MP	7,6	**320**	400	25	1,5	1	366,7	353,3	116	30
71864-MP	10,3	**320**	400	38	2,1	1,1	368	351	123	30
70964-MP	17,7	**320**	440	37	2,1	1	392	368	128	30
71964-MP	23,6	**320**	440	56	3	1,1	397,1	365,6	138	30
7064-MP	46,9	**320**	480	74	4	1,5	417	383	152	30
7264-B-MP	104	**320**	580	92	5	2	476,5	425	235	40
7364-B-MP	193	**320**	670	112	7,5	4	529,4	467,6	264	40
Z-509091.01.SKL[2]	23,6	**335**	450	56	2,1	1,5	402,5	382,5	193	40

[1] With JP sheet steel cage.

[2] With MP cage.

[3] With MPA cage.

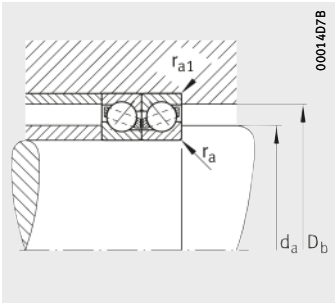

Mounting dimensions

Mounting dimensions					Basic load ratings		Calculation factors				Fatigue limit load	Limiting speed	Reference speed
d_a	D_a	D_b	r_a	r_{a1}	dyn. C_r	stat. C_{0r}	e	X	Y	Y_0	C_{ur}	n_G	n_B
min.	max.	max.	max.	max.	kN	kN					kN	min^{-1}	min^{-1}
286	344	346,8	1	0,6	100	163	0,8	0,39	0,76	0,33	5,2	2 800	–
288,8	341,2	345,4	2	1	163	250	0,8	0,39	0,76	0,33	8	2 800	–
292,4	357,6	364	2,5	1	245	365	0,8	0,39	0,76	0,33	11,2	1 700	–
288,8	371,2	375,4	2	1	190	285	0,8	0,39	0,76	0,33	8,9	2 800	–
290,2	369,8	374	2,1	1	260	400	0,8	0,39	0,76	0,33	12,3	2 800	–
294,6	405,4	413	3	1,5	375	600	0,8	0,39	0,76	0,33	17,2	2 600	–
300	480	489	4	2	500	830	1,14	0,35	0,57	0,26	22,7	2 400	1 350
306	554	566	5	2,5	735	1 270	1,14	0,35	0,57	0,26	37,5	2 000	–
306	554	566	5	2,5	735	1 270	1,14	0,35	0,57	0,26	33	2 000	1 040
295	370	290	2,1	1	196	285	1,14	0,35	0,57	0,26	8,9	2 800	–
290,2	369,8	374	2,1	2,1	260	400	0,8	0,39	0,76	0,33	12,3	2 800	–
307	373	375,4	1,5	1	104	176	0,8	0,39	0,76	0,33	5,4	2 800	–
310,2	369,8	374	2,1	1	204	315	0,8	0,39	0,76	0,33	9,6	2 800	–
310,2	409,8	415,4	2,1	1	245	375	0,8	0,39	0,76	0,33	11,1	2 600	–
312,4	407,6	414	2,5	1	325	530	0,8	0,39	0,76	0,33	15,6	2 600	–
314,6	445,4	453	3	1,5	390	655	1,14	0,35	0,57	0,26	17,7	2 400	1 450
314,6	445,4	453	3	1,5	390	655	1,14	0,35	0,57	0,26	17,7	2 400	–
314,6	445,4	453	3	1,5	430	720	0,8	0,39	0,76	0,33	19,6	2 400	–
320	520	529	4	2	560	965	1,14	0,35	0,57	0,26	26	2 200	1 210
332	588	603	6	3	750	1 370	1,14	0,35	0,57	0,26	35	1 900	940
327	393	395,4	1,5	1	106	186	0,8	0,39	0,76	0,33	5,5	2 600	–
330,2	389,8	394	2,1	1	212	335	0,8	0,39	0,76	0,33	10	2 600	–
330,2	429,8	435,4	2,1	1	245	380	0,8	0,39	0,76	0,33	11,1	2 400	–
332,4	427,6	434	2,5	1	340	570	0,8	0,39	0,76	0,33	16,4	2 400	–
334,6	465,4	473	3	1,5	440	765	0,8	0,39	0,76	0,33	20,2	2 400	–
340	560	569	4	2	610	1 100	1,14	0,35	0,57	0,26	28,5	1 900	1 120
352	638	653	6	3	780	1 500	1,14	0,35	0,57	0,26	36,5	1 800	860
345	440	443	2,1	1,5	255	405	1,14	0,35	0,57	0,26	11	2 400	–

Angular contact ball bearings

Single row

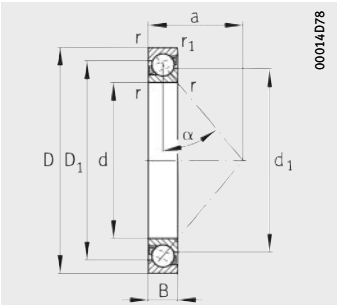

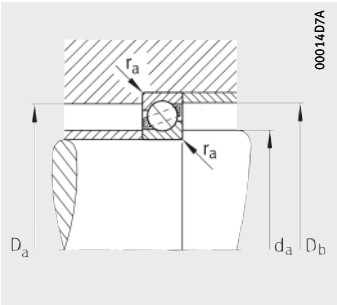

Mounting dimensions

Dimension table (continued) · Dimensions in mm

Designation	Mass	Dimensions								
	m	d	D	B	r	r_1	D_1	d_1	a	α
	≈kg				min.	min.	≈	≈	≈	°
70868-MP	8,02	**340**	420	25	1,5	1	386,7	373,3	122	30
71868-MP	10,8	**340**	420	38	2,1	1,1	390,7	370,9	129	30
70968-MP	18,6	**340**	460	37	2,1	1	412	388	134	30
71968-MP	22,7	**340**	460	56	3	1,1	415	385,3	144	30
7068-B-MP	62,8	**340**	520	82	5	2	450,5	413,9	221	40
7068-MP	63	**340**	520	82	5	2	448	412	165	30
7268-B-MP	123	**340**	620	92	6	3	506,5	455	247	40
7368-B-MPB	218	**340**	710	118	7,5	4	557,5	492,2	279	40
70872-MP	8,45	**360**	440	25	1,5	1	406,7	393,3	128	30
71872-MP	11,5	**360**	440	38	2,1	1,1	408	391	134	30
70972-MP	19,6	**360**	480	37	2,1	1	432	408	140	30
71972-MP	23	**360**	480	56	3	1,1	437,1	405,7	149	30
7072-B-MP	61,6	**360**	540	82	5	2	470,5	433,9	230	40
7072-MP	61,1	**360**	540	82	5	2	475,5	428,4	171	30
7272-B-MP	138	**360**	650	95	6	3	534,4	481,6	259	40
7372-B-MPB	280	**360**	750	125	7,5	4	588,5	520,7	295	40
70876-MP	13,8	**380**	480	31	2	1	438,7	421,3	140	30
71876-MP	18,6	**380**	480	46	2,1	1,1	443,6	418,7	147	30
F-804862.SKL[1)]	17	**380**	480	50	2,1	1,1	446	416,5	147	30
70976-MP	29	**380**	520	44	3	1,1	464,5	435,6	152	30
Z-509092.01.SKL[2)]	39,8	**380**	520	65	2,5	2,5	465,4	438	221	40
71976-MP	41,7	**380**	520	65	4	1,5	468	432	162	30
7076-MP	69,1	**380**	560	82	5	2	488	452	177	30
7276-B-MP	152	**380**	680	95	6	3	557,5	504	270	40
7376-B-MP	314	**380**	780	128	7,5	4	614,8	544,7	307	40
70880-MP	14,7	**400**	500	31	2	1	458,7	441,3	145	30
71880-MP	20,4	**400**	500	46	2,1	1,1	462,4	437,6	153	30
70980-MP	30,3	**400**	540	44	3	1,1	484,5	455,6	158	30
71980-MP	39,4	**400**	540	65	4	1,5	488	452	168	30
7080-MP	83,3	**400**	600	90	5	2	520	480	189	30
7280-B-MPB	188	**400**	720	103	6	3	592,9	533,8	286	40
7380-B-MP	369	**400**	820	136	7,5	4	647	572,7	324	40
Z-509093.01.SKL[2)]	47,5	**410**	560	70	3,5	3,5	499,7	470,3	239	40

[1)] Full complement.

[2)] With MP cage.

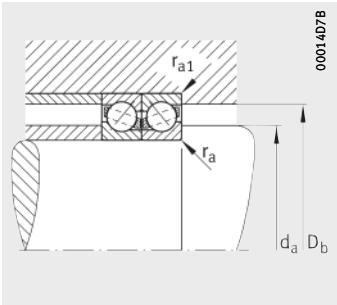

Mounting dimensions

Mounting dimensions					Basic load ratings		Calculation factors				Fatigue limit load	Limiting speed	Reference speed
d_a	D_a	D_b	r_a	r_{a1}	dyn. C_r	stat. C_{0r}	e	X	Y	Y_0	C_{ur}	n_G	n_B
min.	max.	max.	max.	max.	kN	kN					kN	min^{-1}	min^{-1}
347	413	415,4	1,5	1	108	196	0,8	0,39	0,76	0,33	5,6	2 400	–
350,2	409,8	414	2,1	1	212	345	0,8	0,39	0,76	0,33	10,2	2 400	–
350,2	449,8	455,4	2,1	1	250	405	0,8	0,39	0,76	0,33	11,3	2 400	–
352,4	447,6	454	2,5	1	340	570	0,8	0,39	0,76	0,33	18,1	2 400	–
358	502	511,2	4	2	465	850	1,14	0,35	0,57	0,26	22,8	2 000	–
358	502	511,2	4	2	520	930	0,8	0,39	0,76	0,33	27,5	2 000	–
366	594	606	5	2,5	630	1 180	1,14	0,35	0,57	0,26	31,5	1 800	1 000
372	678	693	6	3	865	1 700	1,14	0,35	0,57	0,26	40,5	1 600	790
367	433	435,4	1,5	1	110	204	0,8	0,39	0,76	0,33	5,7	2 400	–
370,2	429,8	434	2,1	1	216	365	0,8	0,39	0,76	0,33	10,3	2 400	–
370,2	469,8	475,4	2,1	1	255	425	0,8	0,39	0,76	0,33	11,6	2 200	–
372,4	467,6	474	2,5	1	345	600	0,8	0,39	0,76	0,33	16,8	2 200	–
378	522	531,2	4	2	475	880	1,14	0,35	0,57	0,26	23,4	1 900	1 130
378	522	531,2	4	2	530	980	0,8	0,39	0,76	0,33	26	1 900	–
386	624	636	5	2,5	695	1 340	1,14	0,35	0,57	0,26	34,5	1 600	920
392	718	733	6	3	900	1 830	1,14	0,35	0,57	0,26	43,5	1 500	740
388,8	471,2	475,4	2	1	166	290	0,8	0,39	0,76	0,33	8	2 000	–
390,2	469,8	474	2,1	1	285	490	0,8	0,39	0,76	0,33	13,5	2 000	–
390,2	469,8	474	2,1	1	360	640	0,8	0,39	0,76	0,33	17,5	1 300	–
392,4	507,6	514	2,5	1	320	560	0,8	0,39	0,76	0,33	15	1 900	–
390	510	510	2,5	2,5	355	630	1,14	0,35	0,57	0,26	16,1	1 900	–
394,6	505,4	513	3	1,5	400	720	0,8	0,39	0,76	0,33	19,6	1 900	–
398	542	551,2	4	2	540	1 040	0,8	0,39	0,76	0,33	25,5	1 900	–
406	654	666	5	2,5	710	1 430	1,14	0,35	0,57	0,26	34,5	1 600	870
412	748	763	6	3	950	1 960	1,14	0,35	0,57	0,26	45	1 400	750
408,8	491,2	495,4	2	1	170	310	0,8	0,39	0,76	0,33	8,3	1 900	–
410,2	489,8	494	2,1	1	290	510	0,8	0,39	0,76	0,33	14,5	1 900	–
412,4	527,6	534	2,5	1	325	585	0,8	0,39	0,76	0,33	15,5	1 900	–
414,6	525,4	533	3	1,5	415	765	0,8	0,39	0,76	0,33	20,3	1 900	–
418	582	591,2	4	2	600	1 180	0,8	0,39	0,76	0,33	29,5	1 800	–
426	694	706	5	2,5	765	1 600	1,14	0,35	0,57	0,26	36,5	1 500	830
432	788	803	6	3	1 020	2 200	1,14	0,35	0,57	0,26	50	1 400	700
423	547	547	3,5	3,5	380	695	1,14	0,35	0,57	0,26	21	1 800	–

Angular contact ball bearings

Single row

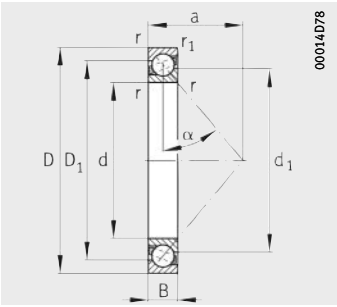

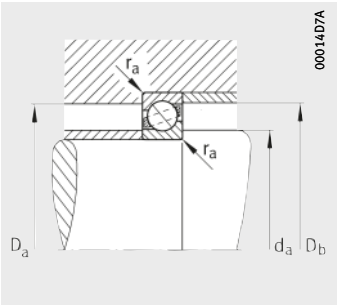

Mounting dimensions

Dimension table (continued) · Dimensions in mm

Designation	Mass	Dimensions								
	m	d	D	B	r	r_1	D_1	d_1	a	α
	≈kg				min.	min.	≈	≈	≈	°
70884-MP	15,4	**420**	520	31	2	1	478,7	461,3	151	30
71884-MP	20,3	**420**	520	46	2,1	1,1	483,7	458,4	159	30
70984-MP	31,6	**420**	560	44	3	1,1	504,5	475,6	164	30
71984-MP	41,4	**420**	560	65	4	1,5	508,2	474,6	174	30
7084-MP	86,8	**420**	620	90	5	2	540	500	195	30
7284-B-MPB	228	**420**	760	109	7,5	4	619	560,7	302	40
7384-B-MP	395	**420**	850	136	9,5	5	672	597,7	334	40
70888-MP	16	**440**	540	31	2	1	498,7	481,3	157	30
71888-MP	21,3	**440**	540	46	2,1	1,1	502,4	477,6	164	30
F-803794.SKL[1]	17,3	**440**	540	46	2,1	0,6	502	481	164	30
F-808756.SKL[2]	45,3	**440**	580	70	4	1,5	530,9	493	184	30
70988-MP	42,2	**440**	600	50	4	1,5	538,5	503,5	175	30
Z-509094.01.SKL[2]	56,9	**440**	600	74	3,5	3,5	540	500	255	40
71988-MP	56,9	**440**	600	74	4	1,5	540	500	187	30
7088-MP	102	**440**	650	94	6	3	566,5	523	204	30
7288-B-MP	255	**440**	790	112	7,5	4	645,5	584,2	314	40
7388-B-MP	477	**440**	900	145	9,5	5	709	630,7	350	40
70892-MP	24,3	**460**	580	37	2,1	1,1	531,1	509	169	30
71892-MP	32,2	**460**	580	56	3	1,1	536,9	506	178	30
F-803705.SKL[2]	37,2	**460**	600	50	3	1,1	535,4	507	178	30
70992-MP	44,6	**460**	620	50	4	1,5	558,5	523,5	181	30
71992-MP	53,9	**460**	620	74	4	1,5	560	520	193	30
7092-MP	115	**460**	680	100	6	3	600,1	544,5	214	30
7292-B-MPB	287	**460**	830	118	7,5	4	677,5	612,3	330	40
7392-B-MP	573	**460**	950	155	9,5	5	746	663,2	373	40
Z-510289.01.SKL[2]	68,4	**465**	635	76	3,5	3,5	565,5	533,5	269	40
70896-MP	25,2	**480**	600	37	2,1	1,1	551,1	529	174	30
71896-MP	33,9	**480**	600	56	3	1,1	556,8	526	184	30
70996-MP	54,3	**480**	650	54	4	1,5	582	548	190	30
71996-MP	73,6	**480**	650	78	5	2	586	544,7	202	30
7096-MP	129	**480**	700	100	6	3	613	567	220	30
7296-B-MPB	348	**480**	870	125	7,5	4	710	640,2	346	40
7396-B-MP	618	**480**	980	160	9,5	5	773,5	686,2	386	40

1) With JP sheet steel cage.

2) With MP cage.

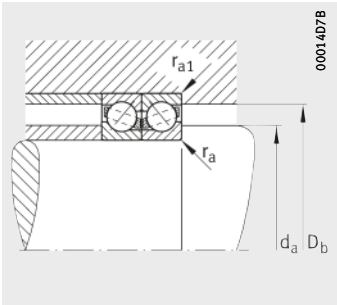

Mounting dimensions

Mounting dimensions					Basic load ratings		Calculation factors				Fatigue limit load	Limiting speed	Reference speed
d_a	D_a	D_b	r_a	r_{a1}	dyn. C_r	stat. C_{0r}	e	X	Y	Y_0	C_{ur}	n_G	n_B
min.	max.	max.	max.	max.	kN	kN					kN	min^{-1}	min^{-1}
428,8	511,2	515,4	2	1	173	320	0,8	0,39	0,76	0,33	8,4	1 900	–
430,2	509,8	514	2,1	1	300	550	0,8	0,39	0,76	0,33	14,2	1 900	–
432,4	547,6	554	2,5	1	335	620	0,8	0,39	0,76	0,33	15,9	1 800	–
434,6	545,4	553	3	1,5	415	780	0,8	0,39	0,76	0,33	20,5	1 800	–
438	602	611,2	4	2	620	1 250	0,8	0,39	0,76	0,33	30	1 600	–
452	728	743	6	3	800	1 730	1,14	0,35	0,57	0,26	38,5	1 400	790
460	810	830	8	4	1 060	2 360	1,14	0,35	0,57	0,26	53	1 300	630
448,8	531,2	535,4	2	1	176	335	0,8	0,39	0,76	0,33	8,6	1 800	–
450,2	529,8	534	2,1	1	300	550	0,8	0,39	0,76	0,33	14,4	1 800	–
450,2	529,8	534	2,1	0,6	345	640	0,8	0,39	0,76	0,33	16,5	1 100	–
454,6	565,4	573	3	1,5	475	930	0,8	0,39	0,76	0,33	23,6	1 600	–
454,6	585,4	593	3	1,5	405	780	0,8	0,39	0,76	0,33	19,4	1 600	–
453	587	587	3,5	3,5	440	865	1,14	0,35	0,57	0,26	23,9	1 600	–
454,6	585,4	593	3	1,5	500	1 000	0,8	0,39	0,76	0,33	24,7	1 600	–
463	627	637,6	5	5	655	1 370	0,8	0,39	0,76	0,33	31,5	1 500	–
472	758	773	6	3	850	1 860	1,14	0,35	0,57	0,26	40,5	1 400	850
480	860	880	8	4	1 160	2 650	1,14	0,35	0,57	0,26	55	1 200	600
470,2	569,8	574	2,1	1	250	465	0,8	0,39	0,76	0,33	11,5	1 600	–
472	568	574	2,5	1	380	735	0,8	0,39	0,76	0,33	18,6	1 600	–
472	568	574	2,5	1	375	720	0,8	0,39	0,76	0,33	17,9	1 600	–
474,6	605,4	613	3	1,5	415	800	0,8	0,39	0,76	0,33	19,5	1 500	–
474,6	605,4	613	3	1,5	500	1 020	0,8	0,39	0,76	0,33	25	1 500	–
483	657	667,6	5	2,5	710	1 500	0,8	0,39	0,76	0,33	37	1 400	–
492	798	813	6	3	930	2 120	1,14	0,35	0,57	0,26	45	1 300	690
500	910	930	8	4	1 250	3 000	1,14	0,35	0,57	0,26	62	1 200	560
478	622	622	3,5	3,5	450	900	1,14	0,35	0,57	0,26	20,9	1 500	–
490,2	589,8	594	2,1	1	255	480	0,8	0,39	0,76	0,33	11,7	1 500	–
492,4	587,6	594	2,5	1	390	765	0,8	0,39	0,76	0,33	19,1	1 500	–
494,6	635,4	643	3	1,5	430	865	0,8	0,39	0,76	0,33	21,1	1 500	–
498	632	641,2	4	2	540	1 100	0,8	0,39	0,76	0,33	26	1 500	–
503	677	687,6	5	2,5	720	1 600	0,8	0,39	0,76	0,33	35	1 400	–
512	838	853	6	3	1 040	2 400	1,14	0,35	0,57	0,26	51	1 200	750
520	940	960	8	4	1 290	3 050	1,14	0,35	0,57	0,26	63	1 100	560

Angular contact ball bearings

Single row

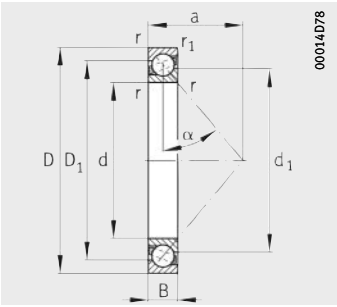

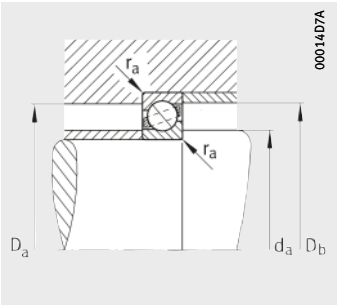

Mounting dimensions

Dimension table (continued) · Dimensions in mm

Designation	Mass	Dimensions								
	m	d	D	B	r	r_1	D_1	d_1	a	α
	≈kg				min.	min.	≈	≈	≈	°
708/500-MP	26,2	**500**	620	37	2,1	1,1	571,1	549	190	30
718/500-MP	35,1	**500**	620	56	3	1,1	576,8	546	190	30
709/500-MP	56,1	**500**	670	54	4	1,5	602	568	196	30
719/500-MP	72	**500**	670	78	5	2	606	564,7	208	30
70/500-MP	133	**500**	720	100	6	3	633	587	226	30
72/500-B-MPB	431	**500**	920	136	7,5	4	747	672,7	366	40
73/500-B-MPB	731	**500**	1 030	170	12	6	810,5	719,2	406	40
Z-556716.SKL[1)]	14,7	**530**	600	35	2	1	572,5	557,5	181	30
708/530-MP	27,6	**530**	650	37	2,1	1,1	601,1	579	189	30
718/530-MP	37,2	**530**	650	56	3	1,1	606,7	576	198	30
709/530-MP	66,6	**530**	710	57	4	1,5	639	601	208	30
719/530-MP	84,9	**530**	710	82	5	2	645,3	598,7	220	30
70/530-MPB	180	**530**	780	112	6	3	691,3	624,6	245	30
72/530-B-MPB	524	**530**	980	145	9,5	5	794	715,7	389	40
708/560-MP	25,8	**560**	680	37	2,1	1,1	631,1	609	198	30
Z-560752.SKL[1)]	28,9	**560**	680	42	3,5	2	631,1	609	200	30
718/560-MP	30,1	**560**	680	56	3	1,1	636,8	606	207	30
709/560-MP	78,1	**560**	750	60	5	2	675	635	219	30
719/560-MP	98,2	**560**	750	85	5	2	681	632,2	232	30
70/560-MPB	207	**560**	820	115	6	3	726,7	658,1	257	30
72/560-B-MPB	595	**560**	1 030	150	9,5	5	836,5	753,7	409	40
708/600-MP	37,7	**600**	730	42	3	1,1	676,7	655,3	213	30
Z-560519.SKL[2)]	41,4	**600**	730	45	2,7	2,7	676,7	655,3	213	30
718/600-MP	49,1	**600**	730	60	3	1,1	681,5	651,3	222	30
709/600-MP	92,2	**600**	800	63	5	2	721	679	234	30
719/600-MP	122	**600**	800	90	5	2	727,5	676	247	30
70/600-MPB	232	**600**	870	118	6	3	763	706,5	271	30
72/600-B-MPB	686	**600**	1 090	155	9,5	5	886,5	803,7	432	40

[1)] Separable bearing with MP cage.

[2)] Separable bearing with MPBS cage.

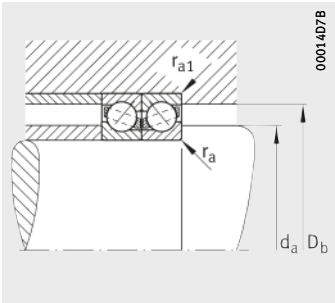

Mounting dimensions

Mounting dimensions					Basic load ratings		Calculation factors				Fatigue limit load	Limiting speed	Reference speed
d_a	D_a	D_b	r_a	r_{a1}	dyn. C_r	stat. C_{0r}	e	X	Y	Y_0	C_{ur}	n_G	n_B
min.	max.	max.	max.	max.	kN	kN					kN	min^{-1}	min^{-1}
510,2	609,8	614	2,1	1	260	500	0,8	0,39	0,76	0,33	12	1 500	–
512,4	607,6	614	2,5	1	390	780	0,8	0,39	0,76	0,33	19,1	1 500	–
514,6	655,4	663	3	1,5	440	900	0,8	0,39	0,76	0,33	21,2	1 400	–
518	652	661,2	4	2	550	1 180	0,8	0,39	0,76	0,33	27	1 400	–
523	697	707,6	5	2,5	735	1 660	0,8	0,39	0,76	0,33	35,5	1 400	–
532	888	903	6	3	1 120	2 700	1,14	0,35	0,57	0,26	57	1 200	700
548	982	1 004	10	5	1 370	3 400	1,14	0,35	0,57	0,26	67	1 100	530
538,8	591,2	595,4	2	1	134	280	0,8	0,39	0,76	0,33	6,6	1 500	–
540,2	639,8	644	2,1	1	265	520	0,8	0,39	0,76	0,33	12,3	1 400	–
542,4	637,6	644	2,5	1	405	830	0,8	0,39	0,76	0,33	19,8	1 400	–
544,6	695,4	703	3	1,5	500	1 080	0,8	0,39	0,76	0,33	24,5	1 400	–
548	692	701,2	4	2	610	1 340	0,8	0,39	0,76	0,33	31	1 400	–
553	757	767,6	5	2,5	850	1 960	0,8	0,39	0,76	0,33	42,5	1 300	–
570	940	960	8	4	1 220	3 050	1,14	0,35	0,57	0,26	60	1 100	670
570,2	669,8	674	2,1	1	270	550	0,8	0,39	0,76	0,33	12,6	1 400	–
574,6	665,4	671,2	3	2	270	550	0,8	0,39	0,76	0,33	15,2	1 400	–
572,4	667,6	674	2,5	1	405	865	0,8	0,39	0,76	0,33	20,1	1 400	–
578	732	741,2	4	2	540	1 200	0,8	0,39	0,76	0,33	26,5	1 300	–
578	732	741,2	4	2	655	1 460	0,8	0,39	0,76	0,33	32,5	1 300	–
583	797	807,6	5	2,5	930	2 280	0,8	0,39	0,76	0,33	47,5	600	–
600	990	1 010	8	4	1 320	3 400	1,14	0,35	0,57	0,26	67	1 000	630
612,4	717,6	724	2,5	1	335	735	0,8	0,39	0,76	0,33	16,2	1 300	–
612,4	717,6	724	3	3	315	670	0,8	0,39	0,76	0,33	14,9	1 300	–
612,4	717,6	724	2,5	1	465	1 040	0,8	0,39	0,76	0,33	22,4	1 300	–
618	782	791,2	4	2	560	1 290	0,8	0,39	0,76	0,33	28	1 200	–
618	782	791,2	4	2	710	1 700	0,8	0,39	0,76	0,33	35,5	1 200	–
623	847	857,6	5	2,5	980	2 400	0,8	0,39	0,76	0,33	48,5	1 100	–
640	1 050	1 070	8	4	1 340	3 600	1,14	0,35	0,57	0,26	68	950	600

Angular contact ball bearings

Single row

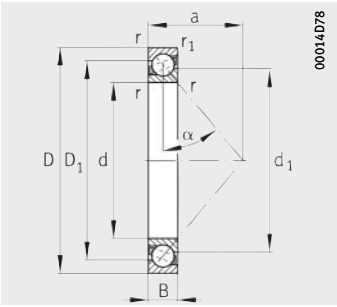

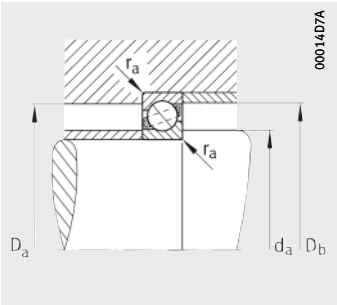

Mounting dimensions

Dimension table (continued) · Dimensions in mm

Designation	Mass	Dimensions								
	m	d	D	B	r	r_1	D_1	d_1	a	α
	≈kg				min.	min.	≈	≈	≈	°
708/630-MPB	55	**630**	780	48	3	1,1	719,8	687,5	228	30
718/630-MPB	71,7	**630**	780	69	4	1,5	726,4	685,9	238	30
709/630-MP	124	**630**	850	71	5	2	763,5	712,2	249	30
719/630-MP	168	**630**	850	100	6	3	768	701,5	264	30
70/630-MPB	297	**630**	920	128	7,5	4	805,5	742	288	30
72/630-B-MPB	784	**630**	1 150	165	12	6	938,9	849,7	456	40
708/670-MPB	51,6	**670**	820	48	3	1,1	759,8	727,5	239	30
718/670-MPB	76,2	**670**	820	69	4	1,5	766,1	725,9	250	30
709/670-MP	142	**670**	900	73	5	2	809	756,5	263	30
719/670-MPB	184	**670**	900	103	6	3	817	757,2	278	30
70/670-MPB	314	**670**	980	136	7,5	4	869,1	790	306	30
72/670-B-MPB	965	**670**	1 220	175	12	6	993	896,7	484	40
F-801245.SKL[1)]	47,6	**680**	810	50	3	1,1	759,8	727,5	239	30
708/710-MPB	62,1	**710**	870	50	4	1,5	805,4	772	253	30
718/710-MPB	93,6	**710**	870	74	4	1,5	811,1	771	265	30
709/710-MP	167	**710**	950	78	5	2	855,5	800	279	30
719/710-MPB	181	**710**	950	106	6	3	861	792	293	30
70/710-MPB	403	**710**	1 030	140	7,5	4	903,5	835	321	30
72/710-B-MPB	1 080	**710**	1 280	180	12	6	1 045	944,7	507	40
708/750-MPB	80,9	**750**	920	54	4	1,5	851,1	816	273	30
718/750-MPB	110	**750**	920	78	5	2	857,5	814,9	280	30
709/750-MP	189	**750**	1 000	80	6	3	901	844	293	30
719/750-MP	216	**750**	1 000	112	6	3	907	836	309	30
70/750-MPB	485	**750**	1 090	150	7,5	4	956	884	341	30
72/750-B-MPB	1 340	**750**	1 360	195	15	7,5	1 107	1 002,7	540	40
708/800-MPB	99,2	**800**	980	57	4	1,5	907,4	869,4	285	30
718/800-MPB	131	**800**	980	82	5	2	914,1	868,5	298	30
709/800-MP	214	**800**	1 060	82	6	3	957	898,2	310	30
719/800-MP	242	**800**	1 060	115	6	3	964	885	326	30
70/800-MPB	547	**800**	1 150	155	7,5	4	1 012	938	339	30

[1)] With MPB cage.

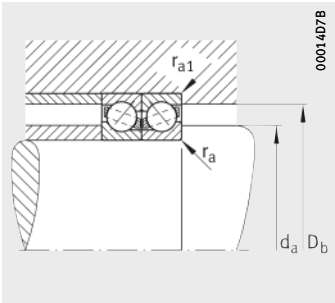

Mounting dimensions

Mounting dimensions					Basic load ratings		Calculation factors				Fatigue limit load	Limiting speed	Reference speed
d_a	D_a	D_b	r_a	r_{a1}	dyn. C_r	stat. C_{0r}	e	X	Y	Y_0	C_{ur}	n_G	n_B
min.	max.	max.	max.	max.	kN	kN					kN	min^{-1}	min^{-1}
642,4	767,6	774	2,5	1	390	865	0,8	0,39	0,76	0,33	18,4	1 200	–
644,6	765,4	773	3	1,5	540	1 250	0,8	0,39	0,76	0,33	27	1 200	–
648	832	841,2	4	2	670	1 630	0,8	0,39	0,76	0,33	33,5	1 100	–
653	827	837,6	5	2,5	780	1 860	0,8	0,39	0,76	0,33	39	1 100	–
658	892	905,4	6	3	1 080	2 800	0,8	0,39	0,76	0,33	54	1 100	–
678	1 102	1 124	10	5	1 430	4 000	1,14	0,35	0,57	0,26	74	900	530
682	808	814	2,5	1	400	915	0,8	0,39	0,76	0,33	18,9	1 100	–
684,6	805,4	813	3	1,5	560	1 340	0,8	0,39	0,76	0,33	28	1 100	–
688	882	891,2	4	2	695	1 730	0,8	0,39	0,76	0,33	35	1 100	–
693	877	888	5	2,5	850	2 120	0,8	0,39	0,76	0,33	42,5	1 100	–
698	952	965,4	6	3	1 200	3 200	0,8	0,39	0,76	0,33	61	1 000	–
718	1 172	1 194	10	5	1 600	4 550	1,14	0,35	0,57	0,26	83	850	500
692,4	797,6	804	2,5	1	400	915	0,8	0,39	0,76	0,33	18,9	1 100	–
724,6	855,4	863	3	1,5	430	1 020	0,8	0,39	0,76	0,33	20,9	1 000	–
724,6	855,4	863	3	1,5	585	1 460	0,8	0,39	0,76	0,33	29,5	1 000	–
728	932	941,2	4	2	765	1 960	0,8	0,39	0,76	0,33	38	950	–
733	927	937,6	5	2,5	900	2 320	0,8	0,39	0,76	0,33	44,5	950	–
738	1 002	1 015,4	6	3	1 250	3 450	0,8	0,39	0,76	0,33	62	950	–
758	1 232	1 254	10	5	1 700	5 000	1,14	0,35	0,57	0,26	87	800	480
764,6	905,4	913	3	1,5	455	1 120	0,8	0,39	0,76	0,33	22,2	600	–
768	902	911,2	4	2	640	1 630	0,8	0,39	0,76	0,33	31	950	–
773	977	987,6	5	2,5	800	2 120	0,8	0,39	0,76	0,33	42	900	–
773	977	987,6	5	2,5	965	2 600	0,8	0,39	0,76	0,33	49,5	900	–
778	1 062	1 075,4	6	3	1 370	3 900	0,8	0,39	0,76	0,33	70	900	–
808	1 302	1 328	12	6	1 860	5 700	1,14	0,35	0,57	0,26	97	750	450
814,6	965,4	973	3	1,5	510	1 290	0,8	0,39	0,76	0,33	25	900	–
818	962	971,2	4	2	710	1 860	0,8	0,39	0,76	0,33	36	900	–
823	1 037	1 047,6	5	2,5	830	2 280	0,8	0,39	0,76	0,33	43	850	–
823	1 037	1 047,6	5	2,5	1 040	2 850	0,8	0,39	0,76	0,33	54	850	–
828	1 122	1 135,4	6	3	1 460	4 300	0,8	0,39	0,76	0,33	74	850	–

Angular contact ball bearings

Single row

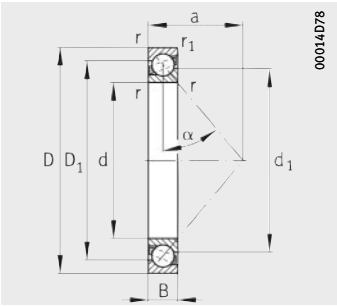

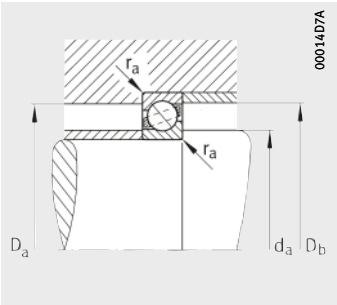

Mounting dimensions

Dimension table (continued) · Dimensions in mm

Designation	Mass	Dimensions							
	m	d	D	B	r	r_1	D_1	a	α
	≈kg				min.	min.	≈	≈	°
708/850-MPB	93,1	**850**	1 030	57	4	1,5	957,4	300	30
718/850-MPB	123	**850**	1 030	82	5	2	964,3	312	30
709/850-MP	244	**850**	1 120	85	6	3	1 013	327	30
719/850-MPB	309	**850**	1 120	118	6	3	1 022	343	30
F-804092.SKL[1]	475	**850**	1 220	118	7,5	7,5	1 072	343	30
70/850-MPB	652	**850**	1 220	165	7,5	4	1 074	381	30
708/900-MPB	123	**900**	1 090	60	5	2	1 013	317	30
718/900-MPB	143	**900**	1 090	85	5	2	1 019,2	330	30
709/900-MP	276	**900**	1 180	88	6	3	1 069,5	344	30
719/900-MP	311	**900**	1 180	122	6	3	1 077	361	30
70/900-MPB	646	**900**	1 280	170	7,5	4	1 129	414	30
708/950-MPB	144	**950**	1 150	63	5	2	1 069	335	30
718/950-MPB	168	**950**	1 150	90	5	2	1 075,5	348	30
709/950-MP	338	**950**	1 250	95	6	3	1 132	365	30
719/950-MP	455	**950**	1 250	132	7,5	4	1 139	384	30
70/950-MPB	882	**950**	1 360	180	7,5	4	1 198,5	423	30
708/1000-MPB	190	**1 000**	1 220	71	5	2	1 135	356	30
718/1000-MPB	255	**1 000**	1 220	100	6	3	1 142,8	370	30
709/1000-MP	411	**1 000**	1 320	103	6	3	1 194	386	30
719/1000-MP	544	**1 000**	1 320	140	7,5	4	1 202	405	30
F-807448.SKL[1]	659	**1 000**	1 420	130	7,5	7,5	1 255,5	414	30
70/1000-MPB	972	**1 000**	1 420	185	7,5	4	1 254	442	30
708/1060-MPB	175	**1 060**	1 280	71	5	2	1 195	373	30
718/1060-MPB	267	**1 060**	1 280	100	6	3	1 198,2	388	30
709/1060-MP	492	**1 060**	1 400	109	7,5	4	1 266	410	30
719/1060-MP	653	**1 060**	1 400	150	7,5	4	1 273	430	30
708/1120-MPB	253	**1 120**	1 360	78	5	2	1 263,5	397	30
718/1120-MPB	312	**1 120**	1 360	106	6	3	1 273,5	411	30
709/1120-MP	515	**1 120**	1 460	109	7,5	4	1 326	427	30
719/1120-MP	686	**1 120**	1 460	150	7,5	4	1 333	447	30

[1] Separable bearing with MPB cage.

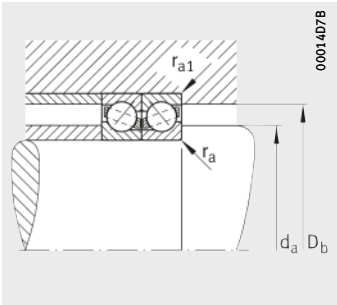

Mounting dimensions

Mounting dimensions					Basic load ratings		Calculation factors				Fatigue limit load	Limiting speed
d_a	D_a	D_b	r_a	r_{a1}	dyn. C_r	stat. C_{0r}	e	X	Y	Y_0	C_{ur}	n_G
min.	max.	max.	max.	max.	kN	kN					kN	min^{-1}
864,6	1 015,4	1 023	3	1,5	520	1 370	0,8	0,39	0,76	0,33	25,5	850
868	1 012	1 021,2	4	2	710	1 930	0,8	0,39	0,76	0,33	36,5	850
873	1 097	1 107,6	5	2,5	880	2 500	0,8	0,39	0,76	0,33	45,5	800
873	1 097	1 107,6	5	2,5	1 100	3 150	0,8	0,39	0,76	0,33	47	800
878	1 192	1 192	6	6	1 120	3 350	0,8	0,39	0,76	0,33	48,5	800
878	1 192	1 205,4	6	3	1 560	4 800	0,8	0,39	0,76	0,33	81	800
918	1 072	1 081,2	4	2	550	1 500	0,8	0,39	0,76	0,33	27	800
918	1 072	1 081,2	4	2	765	2 160	0,8	0,39	0,76	0,33	39	800
923	1 157	1 167,6	5	2,5	965	2 800	0,8	0,39	0,76	0,33	49	750
923	1 157	1 167,6	5	2,5	1 160	3 450	0,8	0,39	0,76	0,33	62	750
928	1 252	1 265,4	6	3	1 600	5 000	0,8	0,39	0,76	0,33	83	750
968	1 132	1 141,2	4	2	585	1 660	0,8	0,39	0,76	0,33	29,5	750
968	1 132	1 141,2	4	2	830	2 400	0,8	0,39	0,76	0,33	42	750
973	1 227	1 237,6	5	2,5	1 060	3 250	0,8	0,39	0,76	0,33	57	700
978	1 222	1 235,4	6	3	1 270	3 900	0,8	0,39	0,76	0,33	67	700
978	1 332	1 345,4	6	3	1 830	6 000	0,8	0,39	0,76	0,33	95	700
1 018	1 202	1 211,2	4	2	680	2 000	0,8	0,39	0,76	0,33	34	700
1 023	1 197	1 207,6	5	2,5	950	2 850	0,8	0,39	0,76	0,33	48,5	700
1 023	1 297	1 307,6	5	2,5	1 120	3 450	0,8	0,39	0,76	0,33	57	700
1 028	1 292	1 305,4	6	3	1 370	4 300	0,8	0,39	0,76	0,33	73	700
1 028	1 392	1 392	6	6	1 400	4 550	0,8	0,39	0,76	0,33	77	700
1 028	1 392	1 405,4	6	3	1 860	6 200	0,8	0,39	0,76	0,33	96	700
1 078	1 262	1 271,2	4	2	695	2 120	0,8	0,39	0,76	0,33	34,5	700
1 083	1 257	1 267,6	5	2,5	965	3 000	0,8	0,39	0,76	0,33	50	700
1 088	1 372	1 385,4	6	3	1 270	4 150	0,8	0,39	0,76	0,33	69	630
1 088	1 372	1 385,4	6	3	1 460	4 750	0,8	0,39	0,76	0,33	76	630
1 138	1 342	1 351,2	4	2	780	2 450	0,8	0,39	0,76	0,33	39	630
1 143	1 337	1 347,6	5	2,5	1 080	3 450	0,8	0,39	0,76	0,33	55	630
1 148	1 432	1 445,4	6	3	1 250	4 150	0,8	0,39	0,76	0,33	68	630
1 148	1 432	1 445,4	6	3	1 500	5 000	0,8	0,39	0,76	0,33	79	630

Angular contact ball bearings

Single row

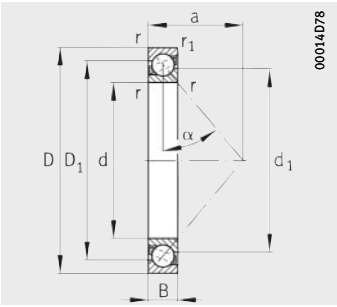

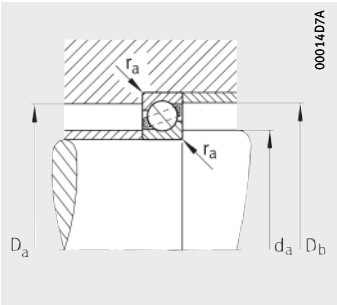

Mounting dimensions

Dimension table (continued) · Dimensions in mm

Designation	Mass	Dimensions							
	m	d	D	B	r	r_1	D_1	a	α
	≈kg				min.	min.	≈	≈	°
708/1180-MPB	265	**1 180**	1 420	78	5	2	1 323,5	414	30
718/1180-MPB	346	**1 180**	1 420	106	6	3	1 330,9	428	30
709/1180-MP	608	**1 180**	1 540	115	7,5	4	1 398	450	30
719/1180-MP	816	**1 180**	1 540	160	7,5	4	1 406	473	30
708/1250-MPB	299	**1 250**	1 500	80	6	3	1 399,1	437	30
718/1250-MPB	382	**1 250**	1 500	112	6	3	1 407,2	453	30
709/1250-MP	720	**1 250**	1 630	122	7,5	4	1 480	477	30
719/1250-MP	967	**1 250**	1 630	170	7,5	4	1 488	501	30
Z-563415.SKL[1)]	279	**1 300**	1 550	80	3	3	1 452	451	30
708/1320-MPB	393	**1 320**	1 600	88	6	3	1 486,8	465	30
718/1320-MPB	523	**1 320**	1 600	122	6	3	1 496	482	30
709/1320-MP	842	**1 320**	1 720	128	7,5	4	1 562	503	30
719/1320-MP	1 110	**1 320**	1 720	175	7,5	4	1 571	526	30
708/1400-MPB	481	**1 400**	1 700	95	6	3	1 579,5	495	30
718/1400-MPB	644	**1 400**	1 700	132	7,5	4	1 589	513	30
719/1400-MPB	1 230	**1 400**	1 820	185	9,5	5	1 670	557	30
718/1500-MPB	782	**1 500**	1 820	140	7,5	4	1 701,6	549	30
719/1500-MP	1 590	**1 500**	1 950	195	9,5	5	1 784	596	30
718/1600-MPB	1 010	**1 600**	1 950	155	7,5	4	1 820,6	590	30
718/1700-MPB	1 130	**1 700**	2 060	160	7,5	4	1 926,5	623	30
718/1800-MPB	1 300	**1 800**	2 180	165	9,5	5	2 040,7	657	30
718/1900-MPB	1 540	**1 900**	2 300	175	9,5	5	2 152,8	694	30
718/2000-MPB	1 830	**2 000**	2 430	190	9,5	5	2 277,5	734	30

1) With MPB cage.

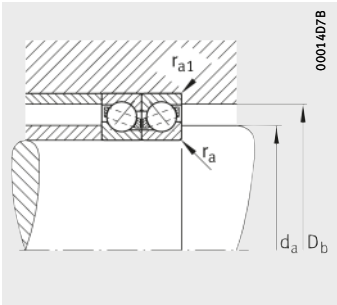

Mounting dimensions

Mounting dimensions					Basic load ratings		Calculation factors				Fatigue limit load	Limiting speed
d_a	D_a	D_b	r_a	r_{a1}	dyn. C_r	stat. C_{0r}	e	X	Y	Y_0	C_{ur}	n_G
min.	max.	max.	max.	max.	kN	kN					kN	min^{-1}
1 198	1 402	1 411,2	4	2	800	2 550	0,8	0,39	0,76	0,33	40	630
1 203	1 397	1 407,6	5	2,5	1 100	3 600	0,8	0,39	0,76	0,33	56	630
1 208	1 512	1 525,4	6	3	1 340	4 550	0,8	0,39	0,76	0,33	71	600
1 208	1 512	1 525,4	6	3	1 630	5 700	0,8	0,39	0,76	0,33	89	600
1 273	1 477	1 487,6	5	2,5	830	2 750	0,8	0,39	0,76	0,33	42	600
1 273	1 477	1 487,6	5	2,5	1 180	4 000	0,8	0,39	0,76	0,33	61	600
1 278	1 602	1 615,4	6	3	1 500	5 400	0,8	0,39	0,76	0,33	80	560
1 278	1 602	1 615,4	6	3	1 760	6 400	0,8	0,39	0,76	0,33	95	560
1 312,4	1 537,6	1 537,6	2,5	2,5	720	2 320	0,8	0,39	0,76	0,33	35,5	560
1 343	1 577	1 587,6	5	2,5	950	3 250	0,8	0,39	0,76	0,33	49,5	560
1 343	1 577	1 587,6	5	2,5	1 340	4 750	0,8	0,39	0,76	0,33	72	560
1 348	1 692	1 705,4	6	3	1 560	5 700	0,8	0,39	0,76	0,33	84	530
1 348	1 692	1 705,4	6	3	1 900	6 950	0,8	0,39	0,76	0,33	102	530
1 423	1 677	1 687,6	5	2,5	1 100	3 900	0,8	0,39	0,76	0,33	56	530
1 428	1 672	1 685,4	6	3	1 500	5 500	0,8	0,39	0,76	0,33	80	530
1 434	1 786	1 802	8	4	2 040	7 800	0,8	0,39	0,76	0,33	115	530
1 528	1 792	1 805,4	6	3	1 630	6 300	0,8	0,39	0,76	0,33	89	500
1 534	1 916	1 932	8	4	2 320	9 300	0,8	0,39	0,76	0,33	127	500
1 628	1 922	1 935,4	6	3	1 860	7 500	0,8	0,39	0,76	0,33	102	500
1 728	2 032	2 045,4	6	3	1 900	8 000	0,8	0,39	0,76	0,33	102	480
1 834	2 146	2 162	8	4	2 160	9 300	0,8	0,39	0,76	0,33	118	450
1 934	2 266	2 282	8	4	2 280	10 200	0,8	0,39	0,76	0,33	124	430
2 034	2 396	2 412	8	4	2 400	11 000	0,8	0,39	0,76	0,33	131	380

FAG

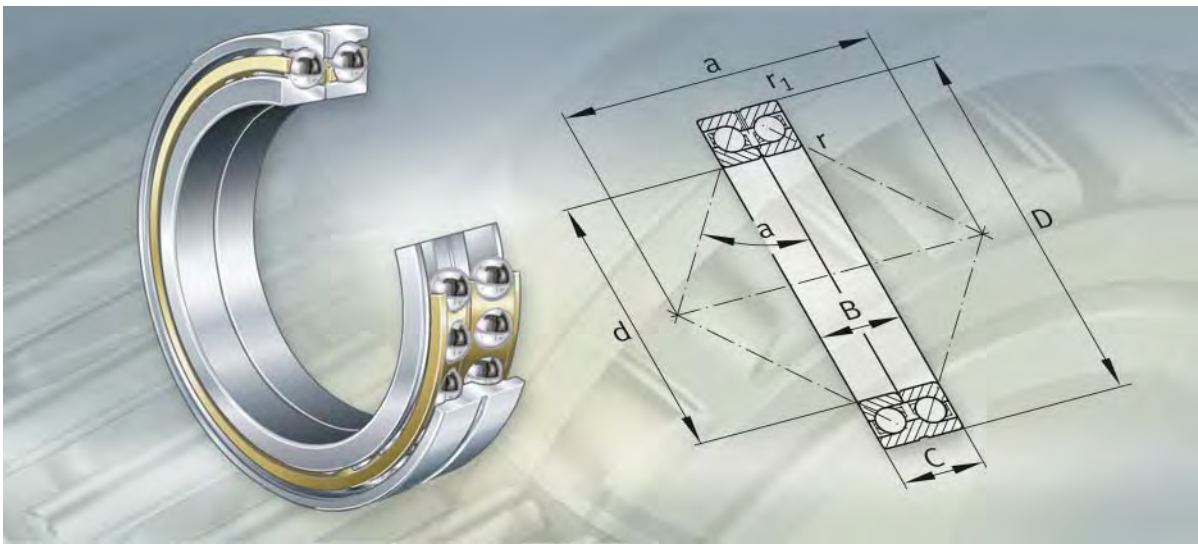

Double row angular contact ball bearings

Double row angular contact ball bearings

		Page
Product overview	Double row angular contact ball bearings	250
Features	Radial and axial load capacity	251
	Bearings with split outer ring	251
	Bearings with split inner ring	251
	Bearings with split, extended inner ring	251
	Sealing	251
	Lubrication	251
	Operating temperature	251
	Cages	251
Design and safety guidelines	Equivalent dynamic bearing load	252
	Equivalent static bearing load	252
	Minimum radial load	252
	Speeds	252
	Design of bearing arrangements	252
Accuracy	Axial internal clearance	253
Dimension tables	Angular contact ball bearings, double row	254

Double row

Split outer ring

Z-5..SKL2-01

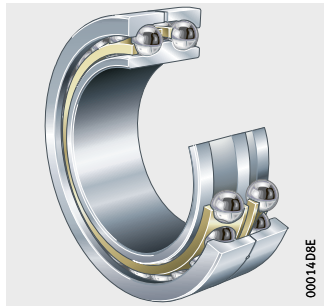

Split inner ring

Z-5..SKL2-02

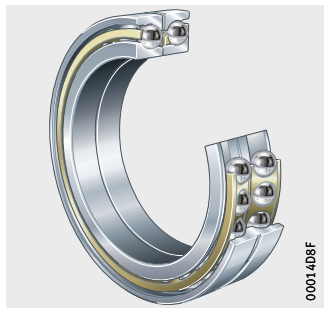

Split, extended inner ring

Z-5..SKL2-03



Double row angular contact ball bearings

Features

The double row angular contact ball bearings shown here are self-retaining units with solid inner and outer rings and ball and cage assemblies with cages. Double row angular contact ball bearings are similar in design to a pair of single row angular contact ball bearings in an X arrangement or an O arrangement.

The special bearings with non-standardised main dimensions with the designation Z-5..SKL differ in the design of the bearing rings.

The angular adjustment facility of the double row angular contact ball bearings is very limited.

Radial and axial load capacity

Double row angular contact ball bearings can support axial forces in both directions and high radial forces. They are particularly suitable for bearing arrangements where rigid axial guidance is required.

The bearings described here are used as axial bearings.

Bearings with split outer ring

Design 1

- In bearings with a split outer ring and a single-piece inner ring, the rows of balls are in an X arrangement.
- These axial bearings for wire rod roll stands are mounted with radial clearance between the outer ring and chock bore. As a result, the angular contact ball bearings support purely axial forces.
- The contact angle $\alpha = 40°$.

Bearings with split inner ring

Design 2

- These bearings with a split inner ring and single-piece outer ring (O arrangement) are also mounted in wire rod roll stands with radial clearance between the outer ring and chock bore.
- The contact angle $\alpha = 40°$.

Bearings with split, extended inner ring

Design 3

- These double row angular contact ball bearings have the same internal construction as the bearings of Design 2. However, the inner rings are wide than the outer ring. These bearings are used, for example, as axial bearings for oil film bearings.
- The contact angle $\alpha = 40°$.

Sealing

The double row angular contact ball bearings are not sealed.

Lubrication

The bearings can be lubricated with grease or oil.

Operating temperature

Double row angular contact ball bearings without seals are suitable for operating temperatures from –30 °C to +150 °C.

Cages

The double row angular contact ball bearings have one solid brass cage for each row of balls.

Design and safety guidelines

Equivalent dynamic bearing load

Contact angle 40°

For bearings under dynamic loading, the following applies in the case of pure axial load:

$$P = 0{,}93 \cdot F_a$$

P kN
Equivalent dynamic bearing load

F_a kN
Axial dynamic bearing load.

Equivalent static bearing load

Contact angle 40°

For bearings under static loading, the following applies in the case of pure axial load:

$$P_0 = 0{,}52 \cdot F_{0a}$$

P_0 kN
Equivalent static load

F_{0a} kN
Axial static bearing load.

Minimum radial load

In order to ensure slippage-free operation, the bearings must be subjected to a minimum radial load. This applies particularly in the case of high speeds and high accelerations.
In continuous operation, ball bearings with cage must therefore be subjected to a minimum load of the order of $P/C_r > 0{,}01$.

Speeds

For these special bearings, the tables only give limiting speeds n_G.

The limiting speed n_G given in the dimension tables must not be exceeded.

Design of bearing arrangements

Shaft and housing tolerances

Recommended shaft tolerances for radial bearings with cylindrical bore, see table, page 130.

Recommended housing tolerances for radial bearings, see table, page 131.

Mounting dimensions

The dimension tables give the maximum dimension of the radius r_a and the diameters of the abutment shoulders D_a, d_a.

Accuracy

The main dimensions of the bearings are not standardised. The dimensional and running tolerances correspond to tolerance class PN to DIN 620-2 or better. We can provide the tolerances of the individual bearings in response to an enquiry.

Axial internal clearance

We can provide the axial internal clearance of the double row angular contact ball bearings in response to an enquiry.



Angular contact ball bearings

Double row

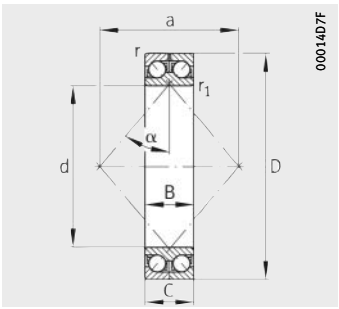

Design 1: $\alpha = 40°$

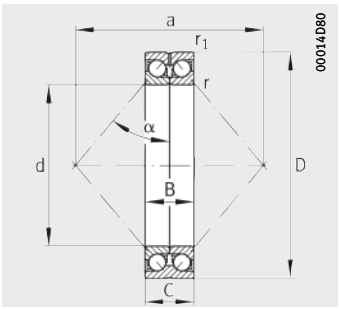

Design 2 and 3: $\alpha = 40°$

Dimension table · Dimensions in mm

Designation	Design	Mass	Dimensions							
		m	d	D	B/C	r	r_1	D_1	d_1	a
		≈kg				min.	min.	≈	≈	≈
Z-508732.01.SKL	2	22	**230**	330	80	2,1	2,1	308,9	271	275
Z-573446.SKL	1	23,9	**230**	330	80	2,1	1,1	308,9	254	195
Z-514481.SKL[1)]	3	18,9	**250**	340	76 /70	2,1	1,5	320,5	286	286
Z-508731.01.SKL	2	30,5	**260**	370	92	2,1	2,1	348,5	305	310
Z-505057.SKL	1	61,5	**260**	400	130	4	4	373	290	342
Z-508730.01.SKL	2	32,5	**280**	390	92	2,1	2,1	368,6	324	327

1) The outer ring is 70 mm wide, the split inner ring is 76 mm wide.

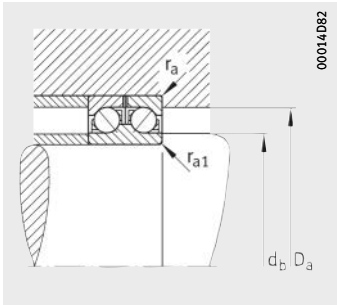

Mounting dimensions
Design 1

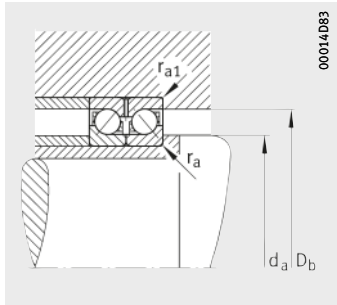

Mounting dimensions
Design 2 and 3

Mounting dimensions				Basic load ratings		Fatigue limit load	Limiting speed
d_a	D_a	r_a	r_{a1}	dyn. C_r	stat. C_{0r}	C_{ur}	n_G
min.	max.	max.	max.	kN	kN	kN	min^{-1}
240	319,5	2,1	2,1	320	530	17,3	1 600
236	319,5	2,1	1	320	530	17,8	1 600
260	333	2,1	1,5	300	510	15,8	1 600
270	359,5	2,1	2,1	390	695	22,2	1 500
277	383	3	3	540	1 020	30	1 400
290	379,5	2,1	2,1	405	750	23,2	1 400

FAG

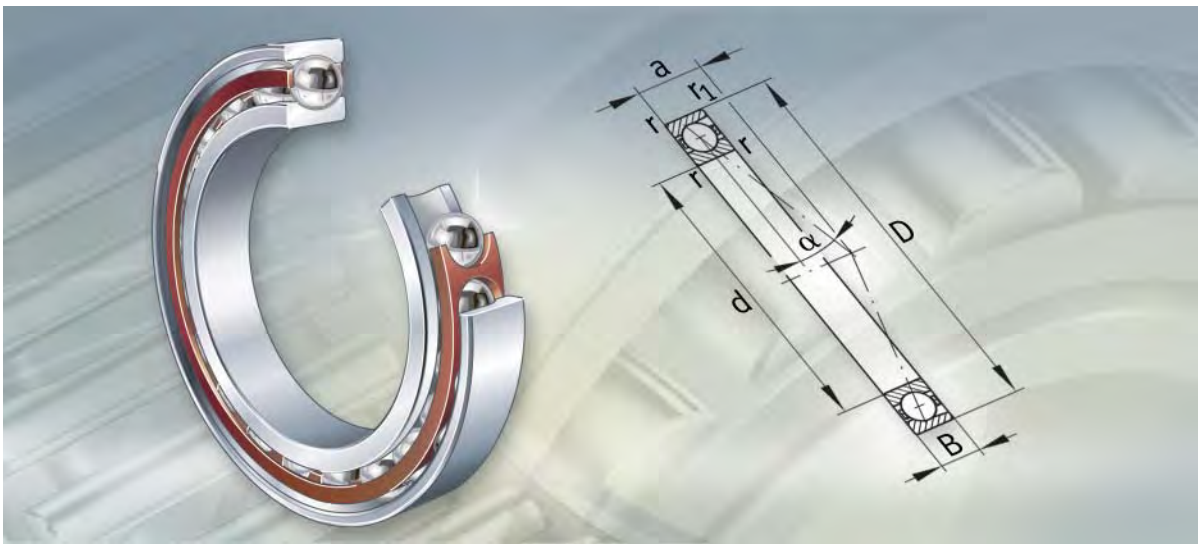

Spindle bearings

Spindle bearings

		Page
Product overview	Spindle bearings	258
Features	Radial and axial load capacity	259
	Standard spindle bearings	259
	Sealing	259
	Lubrication	259
	Universal design	259
	Operating temperature	260
	Cages	260
	Suffixes	260
Design and safety guidelines	Operating life	261
	Equivalent static bearing load	262
	Static load safety factor	262
	Speeds	263
	Universal bearing sets	263
	Ready-to-fit bearing sets	264
	Design of bearing arrangements	265
Accuracy		265
Dimension tables	Spindle bearings with steel balls	266



Standard spindle bearings

B719, B70, B72



With ceramic balls

HCB719

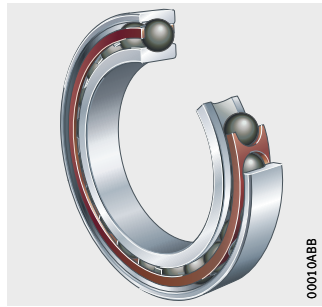

Spindle bearings

Features

Spindle bearings are single row angular contact ball bearings, comprising solid inner and outer rings and ball and cage assemblies with solid window cages. They are not separable.

Spindle bearings have restricted tolerances. They are particularly suitable for bearing arrangements with very high requirements for guidance accuracy and high speeds. They have proved extremely suitable for main spindle bearing arrangements in machine tools.

A detailed description of spindle bearings (designs, calculation, lubrication, speeds, fits) is given in Catalogue SP 1, Super Precision Bearings.

Radial and axial load capacity

The bearings can support axial forces in one direction as well as radial forces. Spindle bearings used in an O or X arrangement can support axial forces in both directions and moments. Bearings in a tandem arrangement can only support axial loads in one direction.

Spindle bearings are available with a contact angle $\alpha = 15°$ (suffix C) or $\alpha = 25°$ (suffix E).



Standard spindle bearings

Standard spindle bearings B70, B719 and B72 have steel balls.

With ceramic balls

Spindle bearings HCB719 have balls in standard sizes made from ceramic (hybrid bearings).

Sealing

Large spindle bearings are of an open design.

Lubrication

The bearings can be lubricated with grease or oil.

Universal design

Spindle bearings of the universal design can be mounted in any arrangement or combined in various sets without any loss of performance. The position of the contact cone is marked on the cylindrical surface of the outer ring.

Bearings with the suffix UL are designed for slight preload in an X or O arrangement.

The preload is altered by mounting and the operating conditions.

Ordering data

When ordering, the number of individual bearings must be stated.

Spindle bearings

Operating temperature

The bearings are suitable for operating temperatures from –30 °C to +100 °C, restricted by the cage material.

The operating temperature must be taken into consideration when selecting the lubricant.

Cages

Spindle bearings have solid window cages made from laminated fabric (suffix T). The cage is guided on the outer ring.

Check the chemical resistance of the cage material to synthetic greases and lubricants with EP additives.

Aged oil and additives in the oil can impair the operating life of the cages at high temperatures.

The oil change intervals must be observed.

Suffixes

Suffixes for available designs: see table.

Available designs

Suffix	Description	Design
C	Contact angle 15°	Standard
E	Contact angle 25°	
H	High preload[1)]	
L	Slight preload[1)]	
M	Moderate preload[1)]	
P4S	Tolerance class P4S	
T	Solid window cage made from laminated fabric	
UL	Universal design, for example for mounting in pairs, bearing pair has slight preload in O and X arrangement	

1) For preload values, see Catalogue SP1, Super Precision Bearings.

Design and safety guidelines

Operating life

High precision bearings must guide machine parts with very high precision and support forces at up to very high speeds.

They are selected predominantly from the perspectives of:

- accuracy
- rigidity
- running behaviour.

In order that they can fulfil these tasks for as long as possible, the bearings must run without wear. The precondition for this is the creation of a load-bearing hydrodynamic lubricant film at the contact points of the rolling contact partners.
Under these conditions, rolling bearings will achieve their fatigue life in a large number of applications. If the design is appropriate to the fatigue life, the operating life of the bearing is normally restricted by the lubricant operating life.

The decisive factors for the operating life from the perspective of load are the Hertzian pressures occurring at the contacts and the bearing kinematics. For high performance assemblies, individual design with the aid of special calculation programs is therefore advisable.

Since failure as a result of fatigue plays no part in practice in the case of high precision bearings, calculation of the rating life L_{10} in accordance with DIN ISO 281 is not suitable as a means of determining the operating life.

Equivalent static bearing load

The equivalent static load P_0 is valid for bearings that are subjected to radial and axial static loads. It induces the same load at the centre point of the most heavily loaded contact point between the rolling element and raceway as the combined bearing load occurring in practice.

For bearings under static loading, the following applies:

Bearings with contact angle 15°

Load ratio	Equivalent static load
$\frac{F_{0a}}{F_{0r}} \leqq 1{,}09$	$P_0 = F_{0r}$
$\frac{F_{0a}}{F_{0r}} > 1{,}09$	$P_0 = 0{,}5 \cdot F_{0r} + 0{,}46 \cdot F_{0a}$

Bearings with contact angle 25°

Load ratio	Equivalent static load
$\frac{F_{0a}}{F_{0r}} \leqq 1{,}3$	$P_0 = F_{0r}$
$\frac{F_{0a}}{F_{0r}} > 1{,}3$	$P_0 = 0{,}5 \cdot F_{0r} + 0{,}38 \cdot F_{0a}$

P_0 kN
Equivalent static bearing load for combined load

F_{0a} kN
Axial static bearing load

F_{0r} kN
Radial static bearing load.

Static load safety factor

In order to maintain the accuracy of the bearings, a static load safety factor $S_0 > 3$ is required.

$$S_0 = \frac{C_{0r}}{P_0}$$

C_{0r} kN
Basic static load rating, see dimension tables

P_0 kN
Equivalent static load.
If several bearings are present, the external load is distributed over the individual bearings.
In this case, see Catalogue SP 1, Super Precision Bearings.

Speeds

The speeds of the bearing arrangements are dependent on:

- the preload of the bearings
- the elastic or rigid arrangement of the bearings in the spindle
- mounting as single bearings or in pairs
- the lubricants
- the cooling of the bearings.

The speeds stated in the dimension tables are guide values for single bearings under elastic preload and low loads.

The limiting speeds n_G given in the dimension tables are valid for lubrication with grease or for minimal quantity lubrication with oil and must not be exceeded.

For a more detailed description, see Catalogue SP 1, Super Precision Bearings.

Universal bearing sets

Universal bearings of the same sort (same bore and outside diameter) are also available as sets. They can be used as required in an O, X or tandem arrangement, *Figure 1* to *Figure 3*, page 264.

Sets with slight preload have the following designations:

- duplex (2 bearings): suffix DUL
- triplex (3 bearings): suffix TUL
- quadruplex (4 bearings): suffix QUL.

Ordering data

When ordering bearings, the number of sets must be stated, not the number of individual bearings.

Ready-to-fit bearing sets

In ready-to-fit bearing sets, the bearings are supplied for use in a specifically defined arrangement.

The bearings must be mounted in the arrangement ordered.

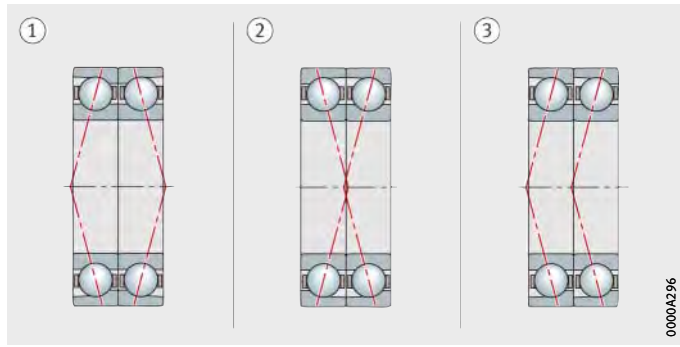

① DBL, O arrangement
② DFL, X arrangement
③ DTL, tandem arrangement

Figure 1
Sets of 2 bearings

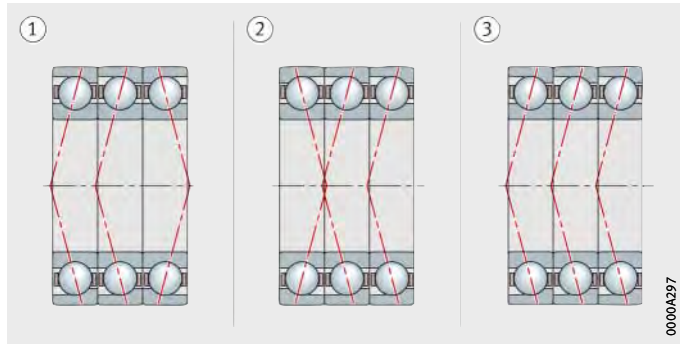

① TBTL, combination of O arrangement and tandem arrangement
② TFTL, combination of X arrangement and tandem arrangement
③ TTL, tandem arrangement

Figure 2
Sets of 3 bearings

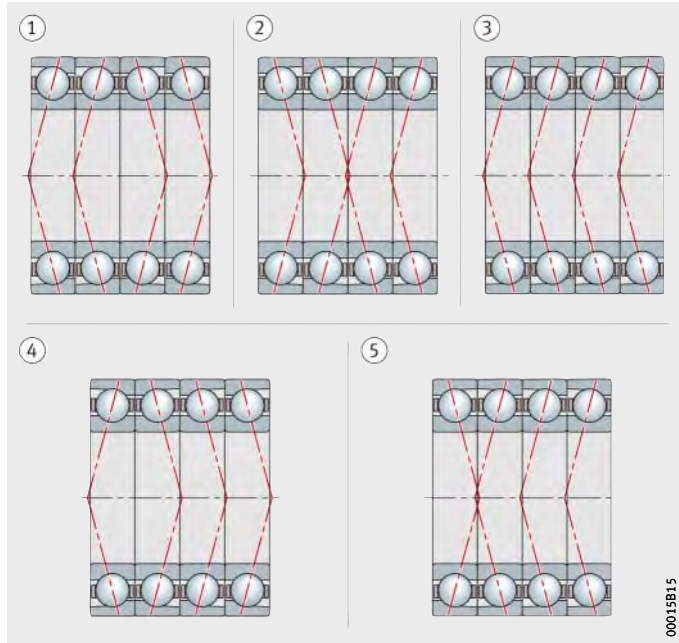

① QBCL, O arrangement
② QFCL, X arrangement
③ QTL, tandem arrangement
④ QBTL, combination of O arrangement and tandem arrangement
⑤ QFTL, combination of X arrangement and tandem arrangement

Figure 3
Sets of 4 bearings

Ordering example

B7048-C-T-P4S-DBL
Description: two spindle bearings in O arrangement, slight preload.

Design of bearing arrangements

Shaft and housing tolerances

For spindle bearings, fits are recommended as a function of the speeds, see Catalogue SP 1, Super Precision Bearings.

Mounting dimensions

The bearing tables give the maximum dimensions of the radii r_a and r_{a1} and the diameters of the abutment shoulders D_a and d_a.

Accuracy

The main dimensions of the bearings correspond to DIN 628-1. The dimensional tolerances of the bearings correspond to tolerance class P4, while the running tolerances correspond to tolerance class P2 to DIN 620-2.

The actual value codes for the bore, outside diameter and bearing width are indicated on the end faces of the inner and outer rings and on the packaging (where they are stated in the sequence “bore, outside diameter, bearing width”).

Inner ring tolerances

Bore d mm		Bore deviation Δ_{dmp} µm		Width deviation Δ_{Bs} µm		Width variation V_{Bs} µm	Radial runout K_{ia} µm	Axial runout	
								S_d µm	S_{ia} µm
over	incl.								
150	180	0	–10	0	–250	4	3	4	5
180	250	0	–12	0	–300	5	4	5	5
250	315	0	–15	0	–350	6	5	6	7
315	400	0	–19	0	–400	7	7	7	9
400	500	0	–23	0	–450	8	8	8	11
500	630	0	–26	0	–500	10	9	10	13

Outer ring tolerances

Outside diameter D mm		Outside diameter deviation Δ_{Dmp} µm		Width variation V_{Cs} µm	Radial runout K_{ea} µm	Axial runout	
						S_D µm	S_{ea} µm
over	incl.						
315	400	0	–15	7	8	7	8
400	500	0	–18	7	9	8	10
500	630	0	–22	8	11	9	12
630	800	0	–26	9	13	10	14

The width deviation Δ_{Cs} is identical to Δ_{Bs} of the corresponding inner ring.

Spindle bearings

With steel balls

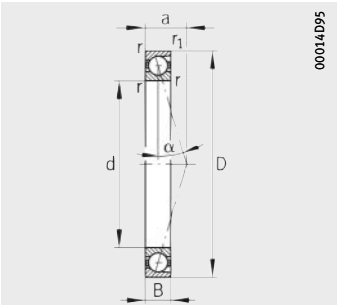

B719..-C, B70..-C, B72..-C
$\alpha = 15°$

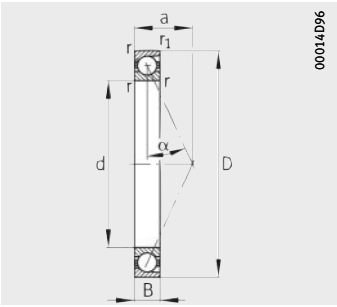

B719..-E, B70..-E, B72..-E
$\alpha = 25°$

Dimension table · Dimensions in mm

Designation	Mass	Dimensions					
	m	d	D	B	r	r_1	a
	≈kg				min.	min.	≈
B7236-C-T-P4S	16,4	**180**	320	52	4	4	60
B7236-E-T-P4S	16,3	**180**	320	52	4	4	84
B7238-C-T-P4S	20	**190**	340	55	4	4	63
B7238-E-T-P4S	20	**190**	340	55	4	4	89
B7240-C-T-P4S	24,2	**200**	360	58	4	4	67
B7240-E-T-P4S	24,2	**200**	360	58	4	4	94
B7044-C-T-P4S	15,7	**220**	340	56	3	3	66
B7044-E-T-P4S	15,7	**220**	340	56	3	3	93
B7244-C-T-P4S	33,1	**220**	400	65	4	4	74
B7244-E-T-P4S	33,1	**220**	400	65	4	4	105
HCB71948-C-T-P4S[1)]	5,92	**240**	320	38	2,1	1,1	57
HCB71948-E-T-P4S[1)]	5,9	**240**	320	38	2,1	1,1	84
B71948-C-T-P4S	7,1	**240**	320	38	2,1	1,1	57
B71948-E-T-P4S	7,08	**240**	320	38	2,1	1,1	84
B7048-C-T-P4S	16,8	**240**	360	56	3	3	68
B7048-E-T-P4S	16,7	**240**	360	56	3	3	98
B71952-C-T-P4S	12	**260**	360	46	2,1	1,1	65
B71952-E-T-P4S	11,9	**260**	360	46	2,1	1,1	95
B71956-C-T-P4S	12,8	**280**	380	46	2,1	1,1	67
B71956-E-T-P4S	12,7	**280**	380	46	2,1	1,1	100
B71960-C-T-P4S	20,1	**300**	420	56	3	1,1	76
B71960-E-T-P4S	20	**300**	420	56	3	1,1	112
B71964-C-T-P4S	21,3	**320**	440	56	3	1,1	79
B71964-E-T-P4S	21,3	**320**	440	56	3	1,1	117
B71968-C-T-P4S	22,4	**340**	460	56	3	1,1	82
B71968-E-T-P4S	22,4	**340**	460	56	3	1,1	121
B71972-C-T-P4S	23,6	**360**	480	56	3	1,1	84
B71972-E-T-P4S	23,6	**360**	480	56	3	1,1	126
B71984-C-T-P4S	36,8	**420**	560	65	4	1,5	98
B71984-E-T-P4S	36,8	**420**	560	65	4	1,5	147
B71992-C-T-P4S	55,1	**460**	620	74	4	1,5	109
B71992-E-T-P4S	55	**460**	620	74	4	1,5	163
B719/500-C-T-P4S	67,9	**500**	670	78	5	2	117
B719/500-E-T-P4S	67,9	**500**	670	78	5	2	175

1) With ceramic balls.

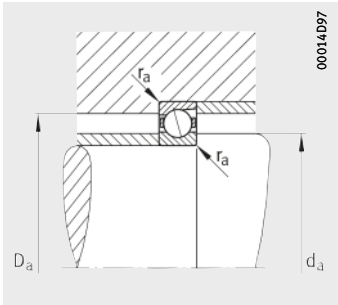

Mounting dimensions

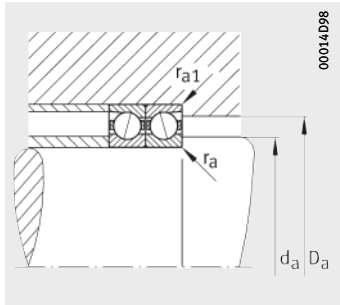

Mounting dimensions

Mounting dimensions				Basic load ratings		Fatigue limit load	Limiting speed	
d_a h12	D_a H12	r_a max.	r_{a1} max.	dyn. C_r kN	stat. C_{0r} kN	C_{ur} kN	n_G grease min^{-1}	n_G oil min^{-1}
213,5	286,5	3	3	305	390	17,6	3 800	5 600
213,5	286,5	3	3	290	365	16,8	3 400	5 000
223,5	306,5	3	3	315	415	18,3	3 400	5 000
223,5	306,5	3	3	300	390	17,4	3 200	4 800
238,5	321,5	3	3	325	440	19	3 200	4 800
238,5	321,5	3	3	310	415	18	3 000	4 500
239	321	2,5	1	325	440	19	3 200	4 800
239	321	2,5	1	310	415	18	3 000	4 500
264	356	3	3	400	560	23,2	2 800	4 300
264	356	3	3	380	540	22,1	2 600	4 000
254	307	1	1	154	215	9,6	4 000	6 000
254	307	1	1	145	200	9	3 600	5 300
254	307	1	1	224	310	13,5	3 200	4 800
254	307	1	1	212	285	12,8	3 000	4 500
260	341	2,5	1	335	465	19,5	3 000	4 500
260	341	2,5	1	315	440	18,5	2 800	4 300
278	342	2,1	1	285	415	17,1	2 800	4 300
278	342	2,1	1	270	390	16,2	2 600	4 000
298	362	2,1	1	300	450	18	2 600	4 000
298	362	2,1	1	280	425	17	2 400	3 800
322	398	1,5	1	360	570	21,8	2 400	3 800
322	398	1,5	1	340	540	20,7	2 200	3 600
342	418	1,5	1	375	620	23,1	2 200	3 600
342	418	1,5	1	355	585	21,9	2 000	3 400
362	438	1,5	1	380	640	23,6	2 200	3 600
362	438	1,5	1	360	610	17,9	1 900	3 200
382	458	1,5	1	390	695	24,8	2 000	3 400
382	458	1,5	1	375	640	23,4	1 800	3 000
444	536	1,5	1	510	980	32,5	1 700	2 800
444	536	1,5	1	475	915	30,5	1 500	2 400
493	587	1,5	1	530	1 080	34,5	1 500	2 400
493	587	1,5	1	500	1 000	32,5	1 400	2 200
538	632	2,5	1	550	1 160	36,5	1 400	2 200
538	632	2,5	1	520	1 080	34,5	1 200	1 900

FAG

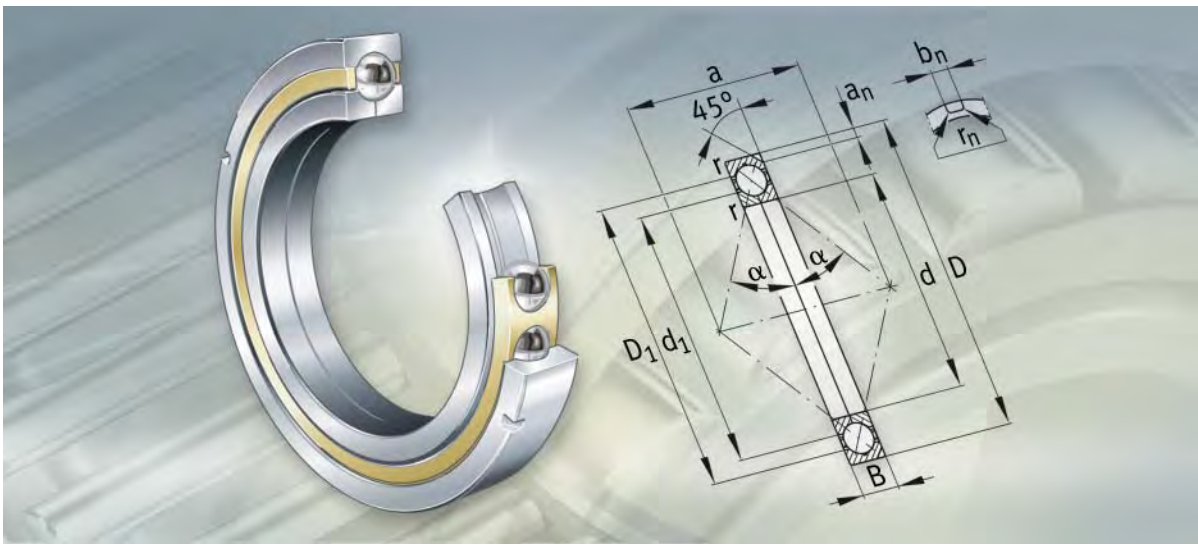

Four point contact bearings

Four point contact bearings

		Page
Product overview	Four point contact bearings	270
Features	Axial load capacity in both directions	271
	With retaining slots in the outer ring	271
	Compensation of angular misalignments	271
	Sealing	272
	Lubrication	272
	Operating temperature	272
	Cages	272
	Suffixes	272
Design and safety guidelines	Equivalent dynamic bearing load	273
	Equivalent static bearing load	273
	Minimum axial load	273
	Application as axial bearings only	273
	Speeds	274
	Design of bearing arrangements	274
Accuracy	Axial internal clearance	275
Dimension tables	Four point contact bearings	276



With retaining slots

QJ2..-N2, QJ3..-N2,
QJ10..-N2, QJ19..-N2



Four point contact bearings

Features

Four point contact bearings are single row angular contact ball bearings and therefore require significantly less space in an axial direction than double row designs.

The bearings comprise solid outer rings, split inner rings and ball and cage assemblies with brass cages.

The two-piece inner rings allow a large complement of balls to be accommodated. The inner ring halves are matched to the particular bearing and must not be interchanged with those of other bearings of the same size. The outer ring with the ball and cage assembly can be mounted separately from the two inner ring halves.

Axial load capacity in both directions

Due to the design of the rolling element raceways with their high raceway shoulders, the contact angle of 35° and the large number of rolling elements, four point contact bearings have a high load carrying capacity.
They can support high axial forces in both directions as well as small radial loads.

With retaining slots in the outer ring

Single row four point contact bearings capable of supporting axial loads in both directions are often combined with a radial bearing and used as an axial bearing with radial clearance in a housing.
For quick and secure location, larger four point contact bearings therefore have two retaining slots in the outer ring offset by 180°. These bearings have the suffix N2.

Compensation of angular misalignments

The possible skewing of the inner rings in relation to the outer ring depends on the bearing load, the operating clearance and the bearing size and is very small. Four point contact bearings are not therefore suitable for the compensation of angular misalignments in housing bores or due to shaft deflections.

Skewing of the bearing rings increases the running noise, places increased strain on the cages and has a harmful influence on the operating life of the bearings.

Four point contact bearings

Sealing

Four point contact bearings are of an open design.

Lubrication

They are not greased and can be lubricated with grease or oil.

Operating temperature

Bearings with solid brass cages can be used at operating temperatures from –30 °C to +150 °C.

Bearings with an outside diameter of more than 240 mm are dimensionally stable up to +200 °C.

Cages

Four point contact bearings with brass cages have the suffix MPA. These window cages are guided on the outer ring.

Suffixes

Suffixes for available designs: see table.

Available designs

Suffix	Description	Design
C3	Axial internal clearance larger than normal	Special design, available by agreement only
MPA	Solid brass cage	Standard
N2	Two retaining slots in outer ring	

Design and safety guidelines

Equivalent dynamic bearing load

The equivalent dynamic load P is valid for bearings that are subjected to radial and axial dynamic loads. It gives the same rating life as the combined bearing load occurring in practice.

For bearings under dynamic loading, the following applies:

Load ratio and equivalent dynamic load

Load ratio	Equivalent dynamic bearing load
$\frac{F_a}{F_r} \leqq 0,95$	$P = F_r + 0,66 \cdot F_a$
$\frac{F_a}{F_r} > 0,95$	$P = 0,6 \cdot F_r + 1,07 \cdot F_a$

P kN
Equivalent dynamic bearing load for combined load
F_a kN
Axial dynamic bearing load
F_r kN
Radial dynamic bearing load.

Equivalent static bearing load

The equivalent static load P_0 is valid for bearings that are subjected to radial and axial static loads.
It induces the same load at the centre point of the most heavily loaded contact point between the rolling element and raceway as the combined bearing load occurring in practice.

For bearings under static loading, the following applies:

$$P_0 = F_{0r} + 0,58 \cdot F_{0a}$$

P_0 kN
Equivalent static bearing load for combined load
F_{0a} kN
Axial static bearing load
F_{0r} kN
Radial static bearing load.

Minimum axial load

In order to ensure low friction in the bearing, especially at high speeds, a minimum axial load is required. In order to prevent an excessive increase in friction, the axial force should be sufficiently high that the rolling elements are in contact with the inner and outer ring raceway at only one point. This is ensured if $F_a \geqq 1,2 \cdot F_r$.

Application as axial bearings only

If four point contact bearings are to be used as axial bearings only, the outer ring must have a large radial clearance in the housing. As a result, the bearings are not subjected to radial load.

Four point contact bearings

Speeds

High speeds can be achieved if four point contact bearings are subjected to purely axial load.

ISO 15 312 does not give thermal reference speeds for these bearings.

The dimension tables therefore only state the limiting speeds n_G. These values are for oil lubrication and must not be exceeded. If higher speeds are required, please contact us.

Design of bearing arrangements

Shaft and housing tolerances

Recommended shaft tolerances for radial bearings with cylindrical bore, see table, page 130.

Recommended housing tolerances for radial bearings, see table, page 131.

Mounting dimensions

The dimension tables give the maximum dimension of the radius r_a and the diameters of the abutment shoulders D_a and d_a.

Accuracy

The main dimensions of the bearings correspond to DIN 628-4.

The dimensional and running tolerances correspond to tolerance class PN to DIN 620-2.

Axial internal clearance

The axial internal clearance corresponds to internal clearance group CN to DIN 628-4.

Axial internal clearance

Bore		Axial internal clearance							
d mm		C2 µm		CN µm		C3 µm		C4 µm	
over	incl.	min.	max.	min.	max.	min.	max.	min.	max.
140	180	90	155	135	200	185	250	235	300
180	220	105	175	155	225	210	280	260	330
220	260	120	195	175	250	230	305	290	360
260	300	140	220	200	280	260	340	320	400
300	355	160	240	220	300	280	360	–	–
355	400	180	270	250	330	310	390	–	–
400	450	200	290	270	360	340	430	–	–
450	500	220	310	290	390	370	470	–	–
500	560	240	330	310	420	400	510	–	–

Four point contact bearings

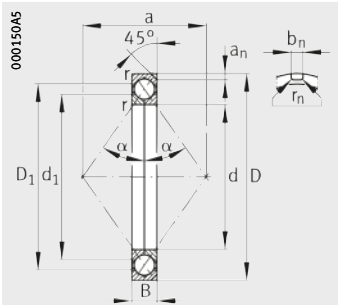

N2, two retaining slots
$\alpha = 35°$

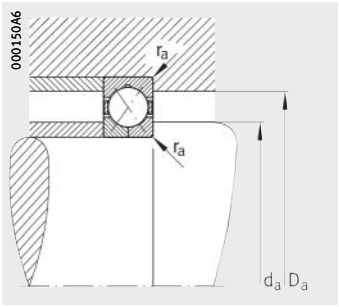

Mounting dimensions

Dimension table · Dimensions in mm

Designation	Mass	Dimensions									
	m	d	D	B	r	D_1	d_1	a	a_n	b_n	r_n
	≈kg				min.	≈	≈	≈			
QJ330-N2-MPA	28	**150**	320	65	4	261	211,3	165	12,7	10,5	2
QJ332-N2-MPA	32,8	**160**	340	68	4	279,9	222,7	175	12,7	10,5	2
QJ334-N2-MPA	38,4	**170**	360	72	4	292	238	186	12,7	10,5	2
QJ236-N2-MPA	19,6	**180**	320	52	4	269	231	175	12,7	10,5	2
QJ336-N2-MPA	44,9	**180**	380	75	4	311	249,1	196	12,7	10,5	2
QJ238-N2-MPA	23,8	**190**	340	55	4	286,3	245,8	186	12,7	10,5	2
QJ338-N2-MPA	52,1	**190**	400	78	5	327	262,5	207	12,7	10,5	2
QJ240-N2-MPA	28	**200**	360	58	4	302	258,6	196	12,7	10,5	2
QJ340-N2-MPA	58,3	**200**	420	80	5	343,5	276,5	217	15	12,5	2,5
QJ1044-N2-MPA	19,5	**220**	340	56	3	298,5	261,4	196	12,7	10,5	2
QJ244-N2-MPA	38,6	**220**	400	65	4	336	284,6	217	12,7	10,5	2
QJ344-N2-MPA	77,1	**220**	460	88	5	378	302	238	15	12,5	2,5
QJ1048-N2-MPA	21,7	**240**	360	56	3	319,6	282,3	210	12,7	10,5	2
QJ248-N2-MPA	53,1	**240**	440	72	4	367	312,5	238	15	12,5	2,5
QJ348-N2-MPA	98,2	**240**	500	95	5	410	330,7	259	15	12,5	2,5
QJ1052-N2-MPA	32,3	**260**	400	65	4	353	309,3	231	12,7	10,5	2
QJ1056-N2-MPA	34,3	**280**	420	65	4	373	329,3	245	15	12,5	2,5
QJ1060-N2-MPA	48,4	**300**	460	74	4	406	356,6	266	15	12,5	2,5
QJ260-N2-MPA	92,4	**300**	540	85	5	455,8	387,3	294	20	15,5	3
QJ1064-N2-MPA	50,7	**320**	480	74	4	424	375,8	280	15	12,5	2,5
QJ264-N2-MPA	119	**320**	580	92	5	486,5	413,3	315	20	15,5	3
QJ272-N2-MPA	155	**360**	650	95	6	543	466,5	354	25	20,5	3
QJ1076-N2-MPA	74,6	**380**	560	82	5	497	443	329	15	12,5	2,5
QJ1984-N2-MPA	48	**420**	560	65	4	512,2	469,2	343	15	12,5	2,5
QJ1084-N2-MPA	103	**420**	620	90	5	550,2	489,8	364	15	12,5	2,5
QJ284-N2-MPA	192	**420**	760	109	7,5	637,8	546,3	413	25	20,5	3
QJ1988-N2-MPA	66,4	**440**	600	74	4	545,6	497	364	15	12,5	2,5
QJ1088-N2-MPA	115	**440**	650	94	6	579,1	514,3	382	20	15,5	3
QJ1992-N2-MPA	68,1	**460**	620	74	4	565,6	517	378	15	12,5	2,5
QJ1096-N2-MPA	139	**480**	700	100	6	625,8	557,7	413	20	15,5	3
QJ10/560-N2-MPA	222	**560**	820	115	6	731	652	483	25	20,5	3

Mounting dimensions			Basic load ratings		Fatigue limit load	Limiting speed
d_a	D_a	r_a	dyn. C_r	stat. C_{0r}	C_{ur}	n_G
min.	max.	max.	kN	kN	kN	min^{-1}
167	303	3	510	735	25,5	3 800
177	323	3	585	865	29,5	3 600
187	343	3	585	915	24,9	3 200
197	303	3	430	670	18,9	3 600
197	363	3	680	1 080	33	3 000
207	323	3	455	735	24,4	3 200
210	380	4	735	1 250	37	2 800
217	343	3	510	850	22,6	3 000
220	400	4	750	1 270	37	2 800
232,4	327,6	2,5	440	750	22,2	3 000
237	383	3	630	1 120	31	2 800
240	440	4	900	1 660	44,5	2 800
252	348	2,5	450	780	25	2 800
257	423	3	680	1 270	30,5	2 800
260	480	4	1 020	1 960	52	2 600
275	385	3	550	1 020	30,5	2 800
294,6	405,4	3	560	1 080	31,5	2 600
314,6	445,4	3	630	1 250	34	2 400
320	520	4	915	1 930	52	2 200
334,6	465,4	3	640	1 320	33	2 400
340	560	4	1 040	2 320	54	1 900
386	624	5	1 140	2 700	60	1 600
398	542	4	780	1 800	42	1 900
434,6	545,4	3	620	1 400	34	1 800
438	602	4	900	2 160	48	1 600
452	728	6	1 430	3 650	82	1 400
454,6	585,4	3	735	1 760	41,5	1 600
463	627	5	965	2 400	55	1 500
474,6	605,4	3	750	1 800	42	1 500
503	677	5	1 060	2 750	60	1 400
583	797	5	1 320	3 750	77	1 200

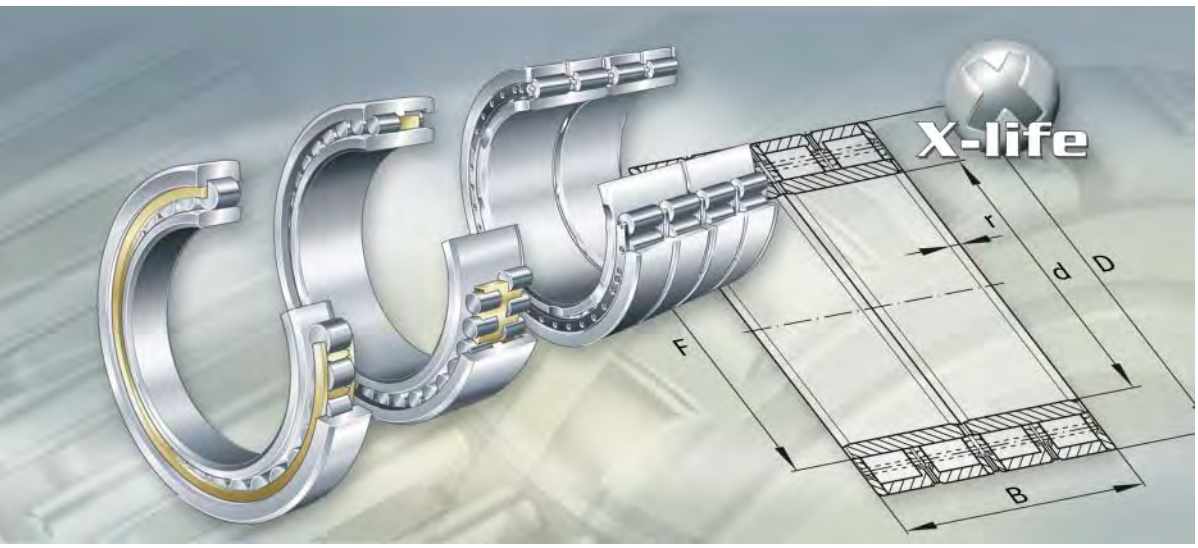

Cylindrical roller bearings

Single row, with cage
Double row, with cage
Four-row, with cage
Full complement
Self-aligning
Split

Cylindrical roller bearings

X-life

Single row cylindrical roller bearings with cage

282

Single row bearings with cage have very high radial load carrying capacity and are suitable for high speeds. The rollers are guided between rigid ribs by one of the two bearing rings. This ring and the removable ring can be mounted separately. In addition to non-locating, semi-locating and locating bearings with a cylindrical bore, high precision bearings with a tapered bore are also available as non-locating bearings for machine tools.

Double row cylindrical roller bearings with cage

388

These bearings have high load carrying capacity and rigidity.
The bearing rings can be mounted separately.
Bearings with a cylindrical bore are non-locating bearings and are used, for example, in rolling mills, plastics calenders and large gearboxes. High precision bearings with a tapered bore are used for the radial support of main spindles in machine tools.

Four-row cylindrical roller bearings with cage

414

These non-locating bearings can support extremely high radial forces. Special bearings are required for the support of axial forces. The principal areas of application are rolling mills, roll presses and calenders. Bearings with a cylindrical bore are normally designed for a tight fit on the roll journal. Bearings with a tapered bore have a tight fit.

Full complement cylindrical roller bearings

442

Full complement bearings have extremely high load capacity and rigidity but cannot achieve speeds as high as those of bearings with a cage. Single row bearings are semi-locating bearings, while double row bearings are available as non-locating, semi-locating and locating bearings, for example for gearboxes. Double row bearings with annular slots in the outer rings are locating bearings. These sealed bearings are highly suitable for cable sheave arrangements.

Self-aligning cylindrical roller bearings

464

These bearings were specially developed for the dry section of paper machinery. They are ideal as non-locating bearings, allow angular adjustment due to the spherical outer ring and the plain bearing pivot ring and are designed for operating temperatures up to +200 °C. In the case of bearings with a tapered bore, the radial internal clearance can be set precisely.

Split cylindrical roller bearings

476

Split cylindrical roller bearings are used in bearing positions that can only be accessed with difficulty, for example on cranked and very long shafts. The bearing design is matched to the specific application. Single row bearings are available as non-locating, semi-locating and locating bearings.
Double row and four-row bearings were developed as locating or non-locating bearings especially for the drive spindles of roll stands.



NU



N



NJ



NUP



LSL1923

00014DFF



NNU40, NNU48, NNU49



NNU41



Z-5..ZL2-01



NN30..-AS-K-M-SP



NNU49..-S-K-M-SP

00014E00

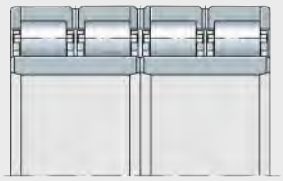

Z-5..ZL4-01, F-8..ZL4-01

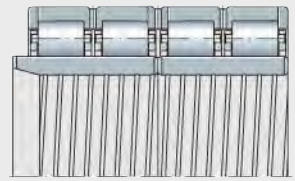

Z-5..ZL4-02, F-8..ZL4-02



Z-5..ZL4-03, F-8..ZL4-03

00014E01



SL1818, SL1829, SL1830, SL1822



SL1923

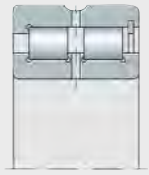

SL1850

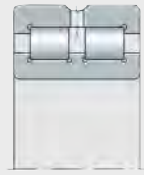

SL0148, SL0149

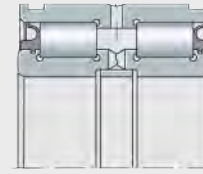

SL0450..-PP, SL04..-PP

00014E02



Z-5..ZL2-02, F-8..ZL2-02

00014E03



Z-5..ZL1-05, F-8..ZL1-05



Z-5..ZL1-06, F-8..ZL1-06



Z-5..ZL1-07, F-8..ZL1-07

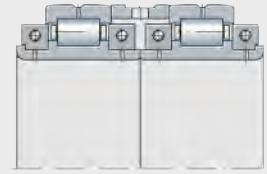

Z-5..ZL2-03, F-8..ZL2-03

00014E04

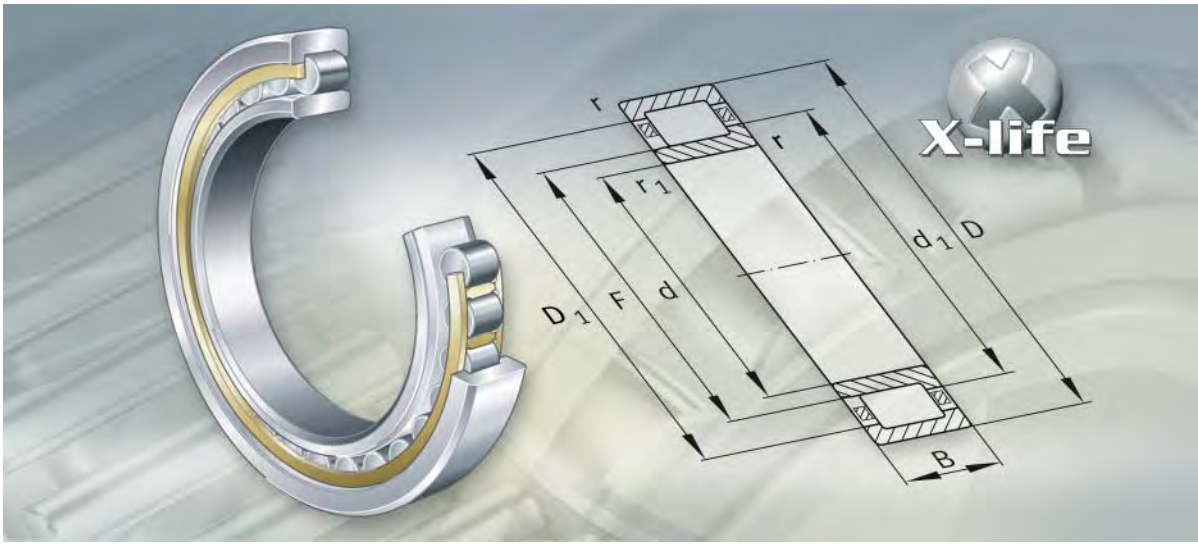

Single row cylindrical roller bearings with cage

Single row cylindrical roller bearings with cage

		Page
Product overview	Single row cylindrical roller bearings with cage	284
Features	X-life	286
	Non-locating bearings	286
	Semi-locating bearings	287
	Locating bearings	287
	Sealing	288
	Lubrication	288
	Operating temperature	288
	Cages	288
	Suffixes	289
Design and safety guidelines	Permissible skewing	290
	Axial load carrying capacity	290
	Minimum radial load	291
	Equivalent dynamic bearing load	292
	Operating life of high precision bearings	293
	Equivalent static bearing load	293
	Static load safety factor of high precision bearings	293
	Speeds of high precision bearings	294
	Design of bearing arrangements	294
Accuracy	Radial internal clearance	296
Dimension tables	Cylindrical roller bearings with cage, single row, non-locating bearings	298
	Cylindrical roller bearings with cage, single row, semi-locating and locating bearings	338
	Cylindrical roller bearings with disc cage, single row, semi-locating bearings	384
	Super precision cylindrical roller bearings, single row, with tapered bore	386



Single row cylindrical roller bearings with cage

Non-locating bearings

With cylindrical bore

NU10, NU12, NU18, NU19, NU28, NU29, NU30, NU31, NU38, NU39..-E, NU4, NU2..-E, NU3..-E, NU20..-E, NU22..-E, NU23..-E, Z-5..ZL1-01, F-8..ZL1-01

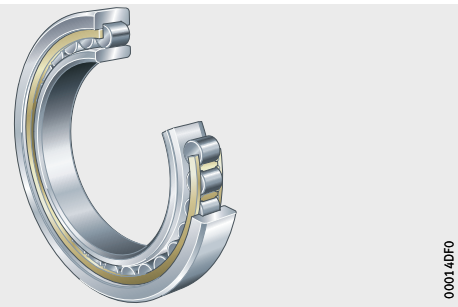

N2..-E, N3..-E, N10, N18, N28, N29, N4, Z-5..ZL1-02, F-8..ZL1-02



With tapered bore

NU10..-K, NU30..-K



N10..-K-M1-SP, N19..-K-M1-SP



Semi-locating bearings

With cage

NJ2..-E, NJ3..-E, NJ22..-E, NJ23..-E, NJ4, NJ10, NJ18, NJ19, NJ28, NJ29, Z-5..ZL1-03, F-8..ZL1-03

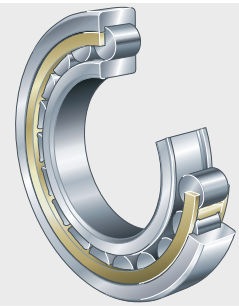

With disc cage

LSL1923

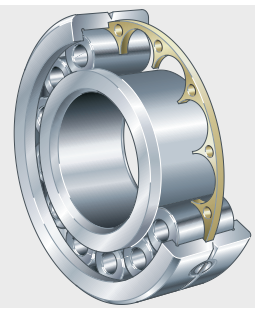

Locating bearings

With rib washer

NUP2..-E, NUP3..-E, NUP20..-E, NUP22..-E, NUP23..-E, NUP10, NUP18, NUP19, NUP28, NUP29, NUP4, Z-5..ZL1-04, F-8..ZL1-04

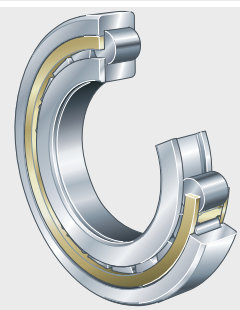

With L-section ring

NJ2..-E + HJ, NJ3..-E + HJ, NJ22..-E + HJ, NJ23..-E + HJ, NJ4 + HJ, NJ10 + HJ, NJ18 + HJ, NJ19 + HJ, NJ28 + HJ, NJ29 + HJ

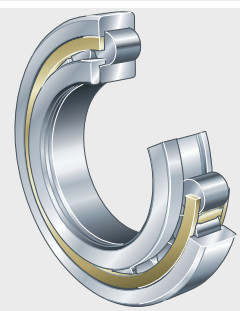

Single row cylindrical roller bearings with cage

Features

Single row cylindrical roller bearings with cage are units comprising solid inner and outer rings and cylindrical roller and cage assemblies. The outer rings have rigid ribs on both sides or no ribs, the inner rings have one or two rigid ribs or are designed without ribs. The cage prevents the cylindrical rollers from coming into contact with each other during rolling.

The cylindrical roller bearings have high rigidity, high radial load carrying capacity and, due to the cage, are suitable for higher speeds than full complement designs. Bearings with the suffix E have a higher capacity roller set and are thus designed for very high load carrying capacity.

The bearings are separable and are therefore easier to mount and dismount. As a result, both bearing rings can be given a tight fit.

Single row cylindrical roller bearings with cage are available as non-locating, semi-locating and locating bearings.

X-life

Some sizes are supplied in the X-life design. These bearings are indicated in the dimension tables. Bearings of X-life quality have, for example, a lower roughness R_a and a better geometrical accuracy of the raceways than comparable designs that are not X-life. As a result, these bearings have higher load carrying capacity and longer rating life for the same dimensioning. In certain applications, this means that a smaller bearing arrangement can be designed where necessary.

Non-locating bearings

Cylindrical roller bearings NU and N are non-locating bearings and can support radial forces only. In series NU, the outer ring has two ribs, while the inner ring has no ribs. Bearings of series N have two ribs on the inner ring and an outer ring without ribs.

Special bearings with cylindrical bore

In addition to cylindrical roller bearings with standardised designations and main dimensions, we also supply special bearings. Special bearings of the type NU (Z-5..ZL1-01) are used, for example, in drilling rig equipment. They have chamfers on the inner ring bore and, in some cases, inch dimensions.

Special bearings for high speed tubular stranding machines are of the type N (Z-5..ZL1-02 or F-8..ZL1-02) and have a lubrication groove and three lubrication holes in the outer ring. The robust solid brass cage is guided on the inner ring. In order to reduce the inertia forces, the bearings contain only half as many rollers as normal bearings of the same size. Their load carrying capacity is, however, sufficient for the application. Large bearings have threaded holes for the location of eye bolts for mounting. The bearings for high speed tubular stranding machines have metric main dimensions.

Super precision bearings with tapered bore

Single row cylindrical roller bearings of series N10..-K-M1-SP and N19..-K-M1-SP are super precision bearings for machine tools. In the case of bearings with a tapered bearing bore (taper 1:12), the radial internal clearance or preload can be set to an optimum value. These bearings are characterised by their high load carrying capacity, high rigidity and excellent accuracy.

Axial displacement

The outer and inner ring can be axially displaced relative to each other from the central position by the value “s”.

Semi-locating bearings

Cylindrical roller bearings NJ and bearings with disc cage LSL1923 are semi-locating bearings. Semi-locating bearings can support axial forces in one direction as well as high radial forces and can thus guide shafts axially in one direction. They act as non-locating bearings in the opposite direction. The bearings have two ribs on the outer ring and one rib on the inner ring.

Bearings with disc cage

Since they have a larger number of rolling elements and larger rolling elements, bearings of series LSL have higher radial and axial load carrying capacity than all comparable cylindrical roller bearing designs with a solid cage. They can withstand high shock loads and vibrations, support large centrifugal forces and allow accelerations up to 500 m/s^2.

Due to the low frictional torque across the entire speed range and the low heat generation, the bearings have the highest limiting speeds of all cylindrical roller bearings. In addition, the optimum heat dissipation ensures thermally stable conditions in the bearing.

Bearings with L-section ring

Non-locating bearings NU can be combined with an L-section ring HJ to form a semi-locating bearing unit. They must not be installed with two L-section rings (due to the risk of jamming).

Axial displacement

The outer and inner ring can be axially displaced relative to each other in one direction by the value “s”.

Locating bearings

Cylindrical roller bearings NUP and NJ with HJ are locating bearings. Locating bearings can support axial forces in both directions as well as high radial forces and can thus guide shafts axially in both directions.

Bearings with rib washer

The design NUP has two ribs on the outer ring and one rigid rib on the inner ring. A loose rib washer is fitted on the opposite side.

Single row cylindrical roller bearings with cage

Bearings with L-section ring

Semi-locating bearings NJ can be combined with an L-section ring HJ to form a locating bearing unit. This design has two ribs on the outer ring, one rib on the inner ring and additionally an L-section ring for the ribless side of the inner ring. The L-section rings suitable for the bearings are indicated in the dimension tables.
The bearing and L-section ring must be ordered separately.

L-section rings

L-section rings are advantageous where, under high loads, the seating surface of the inner ring in bearings of series NUP bearings with a loose rib washer is too small to provide a sufficiently high bearing seat. In some applications, they also make it easier to mount and dismount the bearings.

Sealing

The bearings are supplied without seals.

Lubrication

The bearings can be lubricated from the end faces using grease or oil.

Operating temperature

Single row cylindrical roller bearings with cage can be used at operating temperatures from –30 °C to +150 °C.
For continuous operating temperatures above +120 °C, please contact us.

Cages

The suffix M1 indicates standard bearings with roller-guided brass cages. Further cage suffixes: see table, page 289.
Please contact us for information on the cage designs for special bearings.

Disc cage

In cylindrical roller bearings LSL1923, an externally-guided flat brass disc cage prevents the cylindrical rollers from coming into contact with each other during rolling.

The cage has pockets to accommodate the rolling elements. The rolling elements are guided between the ribs on the outer ring. Due to its low mass, the cage is subjected to only minimal strain under acceleration. It therefore fulfils ideally its role as an element separating the rolling elements and supporting the inertia forces.

Lubricant is exchanged via axial through holes. Good oil flow through the axially open bearing is supported by the axial holes.

The outer ring is axially split and held together by fasteners.

Suffixes

Suffixes for available designs of standard bearings: see table.

Available designs

Suffix[1)]	Description	Design
C3	Radial internal clearance larger than normal	Special design, available by agreement only
C4	Radial internal clearance larger than C3	
E	Increased capacity design	Standard
EX	Increased capacity design, design modified in accordance with standard (parts from these bearings must not be interchanged with parts from bearings of the same size of the previous design E)	
K	Tapered bore, taper 1:12	
M	Solid brass cage, two-piece, roller-guided	Special design, available by agreement only
MA	Solid brass cage, rib-guided on outer ring	
MPA	Solid brass window cage, rib-guided on outer ring	
MP1A	Solid brass cage, single-piece, rib-guided on outer ring	
MP1B	Solid brass cage, single-piece, rib-guided on inner ring	
M1	Solid brass cage, roller-guided	Standard
M1A	Solid brass cage, two-piece, rib-guided on outer ring	Special design, available by agreement only
M1B	Solid brass cage, two-piece, rib-guided on inner ring	
SP	Tolerance class SP	Standard

1) In the case of non-standardised cylindrical roller bearings, the design (for example radial internal clearance, cage, accuracy) is specified in the designation (Z-5 or F-8). In the case of these bearings, additional suffixes are only used for deviations from the original design.

Design and safety guidelines

Permissible skewing

There is no significant reduction in rating life if the misalignment of the inner ring relative to the outer ring does not exceed the following values:

- 4′ in bearings of series 10, 12, 18, 19, 2, 3, 4
- 3′ in bearings of series 20, 22, 23, 28, 29, 30, 31, 38, 39.

Axial load carrying capacity

The axial load carrying capacity is dependent on:

- the size of the sliding surfaces between the ribs and the end faces of the rolling elements
- the sliding velocity at the ribs
- the lubrication on the contact surfaces
- tilting of the bearing.

Ribs subjected to load must be supported across their entire height.

The permissible axial load $F_{a\,per}$ must not be exceeded, in order to avoid an unacceptable increase in temperature.

The axial limiting load $F_{a\,max}$ must not be exceeded, in order to avoid impermissible pressures at the contact surfaces.

The ratio F_a/F_r must not exceed the value 0,4.

Continuous axial loading without simultaneous radial loading is not permissible.

Permissible and maximum axial load

$$F_{a\,per} = k_S \cdot k_B \cdot {d_M}^{1,5} \cdot n^{-0,6} \leqq F_{a\,max}$$

$$F_{a\,max} = 0,075 \cdot k_B \cdot {d_M}^{2,1}$$

$F_{a\,per}$ N
Permissible axial load

$F_{a\,max}$ N
Axial limiting load

k_S –
Factor as a function of the lubrication method, see table, page 291

k_B –
Factor as a function of the bearing series, see table Bearing factor k_B, page 291

d_M mm
Mean bearing diameter (d + D)/2, see dimension table

n min^{-1}
Operating speed.

Factor k_S for the lubrication method

Lubrication method[1)]	Factor k_s
Minimal heat dissipation, drip feed oil lubrication, oil mist lubrication, low operating viscosity ($\nu < 0{,}5 \cdot \nu_1$)	7,5 to 10
Poor heat dissipation, oil sump lubrication, oil spray lubrication, low oil flow	10 to 15
Good heat dissipation, recirculating oil lubrication (pressurised oil lubrication)	12 to 18
Very good heat dissipation, recirculating oil lubrication with oil cooling, high operating viscosity ($\nu > 2 \cdot \nu_1$)	16 to 24

1) Doped oils should be used, e.g. CLP (DIN 51 517) and HLP (DIN 51 524) of ISO VG classes 32 to 460 and ATF oils (DIN 51 502) and gearbox oils (DIN 51 512) of SAE viscosity classes 75 W to 140 W.

Bearing factor k_B

Series	Factor k_B
NJ2..-E, NJ22..-E, NUP2..-E, NUP22..-E	15
NJ3..-E, NJ23..-E, NUP3..-E, NUP23..-E	20
NJ4	22

Skewing of the bearing, for example due to shaft deflection, can lead to alternating stresses on the inner ring ribs.
In this case, the axial load must be restricted to F_{as} for bearing tilting of up to max. 2 angular minutes.

$$F_{as} = 20 \cdot d_M^{1,42}$$

If even greater tilting is present, special strength analysis is required.

Minimum radial load

In continuous operation, a minimum radial load of the order of $F_{r\,min} = C_{0r}/60$ is necessary.
If $F_{r\,min} < C_{0r}/60$, please contact us.

Single row cylindrical roller bearings with cage

Equivalent dynamic bearing load

Non-locating bearings

For bearings under dynamic loading, the following applies:

$$P = F_r$$

Semi-locating and locating bearings

If an axial force F_a is present in addition to the radial force F_r, the load ratio must be taken into consideration.

Load ratio and equivalent dynamic load

Load ratio	Equivalent dynamic bearing load
$\frac{F_a}{F_r} \leq e$	$P = F_r$
$\frac{F_a}{F_r} > e$	$P = 0,92 \cdot F_r + Y \cdot F_a$

P kN
Equivalent dynamic bearing load for combined load
F_a kN
Axial dynamic bearing load
F_r kN
Radial dynamic bearing load
e, Y –
Factors, see table.

Factors e and Y

Series	Calculation factors	
	e	Y
NJ2, NUP2, NJ3, NUP3, NJ4	0,2	0,6
NJ22, NUP22, NJ23, NUP23, LSL1923	0,3	0,4

Operating life of high precision bearings

High precision bearings must guide machine parts with high precision and support forces at up to very high speeds.

They are selected predominantly from the perspectives of:

- accuracy
- rigidity
- running behaviour.

In order that they can fulfil these tasks for as long as possible, the bearings must run without wear. The precondition for this is the creation of a load-bearing hydrodynamic lubricant film at the contact points of the rolling contact partners.
Under these conditions, rolling bearings will achieve their fatigue life in a large number of applications. If the design is appropriate to the fatigue life, the operating life of the bearing is normally restricted by the lubricant operating life.

The decisive factors for the operating life from the perspective of load are the Hertzian pressures occurring at the contacts and the bearing kinematics. For high performance assemblies, individual design with the aid of special calculation programs is therefore advisable.

Since failure as a result of fatigue plays no part in practice in the case of high precision bearings, calculation of the rating life L_{10} in accordance with DIN ISO 281 is not suitable as a means of determining the operating life.

Equivalent static bearing load

For bearings under static loading, the following applies:

$$P_0 = F_{0r}$$

P_0 kN
Equivalent static bearing load

F_{0r} kN
Radial static bearing load.

Static load safety factor of high precision bearings

$$S_0 = \frac{C_{0r}}{P_0}$$

S_0 –
Static load safety factor

C_{0r} kN
Basic static load rating, see dimension tables

P_0 kN
Equivalent static bearing load.

In order to achieve sufficiently smooth running, the static load safety factor for high precision bearings should be $S_0 > 3$.

Speeds of high precision bearings

The achievable speed depends on the radial internal clearance while warm from operation.
For calculation, the values from the dimension table are multiplied by the correction factor in the table.

Correction factors

Clearance or preload in operation µm		Correction factor
0 to 5	(clearance)	1 to 1,1
–5 to 0	(preload)	0,8 to 1

The limiting speeds n_G given in the dimension tables for high precision bearings are valid for lubrication with grease or for minimal quantity lubrication with oil and must not be exceeded.

Design of bearing arrangements

Shaft and housing tolerances

Recommended shaft tolerances for radial bearings with cylindrical bore, see table, page 130.

Recommended housing tolerances for radial bearings, see table, page 131.

Recommendations for machining of the tapered shaft and housing for high precision bearings, see table, page 398.

Axial location

In order to prevent lateral creep of the bearing rings, they must be located by force locking or form fit.

The abutment shoulders (shaft and housing) should be sufficiently high and perpendicular to the bearing axis.

The transition from the bearing seating point to the abutment shoulder must be designed with rounding to DIN 5418 or an undercut to DIN 509. The minimum values for the chamfer dimensions r in the dimension tables must be observed.

In the case of semi-locating bearings, the bearing rings only require support on one side, on the rib supporting the axial load.

Full support must be provided for ribs transmitting forces in axially loaded bearings.

Accuracy

The dimensional and running tolerances of the bearings with cylindrical bore correspond to tolerance class PN to DIN 620.

Special bearings for tubular stranding machines running at high speeds have increased accuracy to tolerance class P6 or P5.

Super precision bearings with a tapered bore correspond to the more stringent tolerance class SP.

Width tolerances SP

Bore d mm		Width deviation (in relation to bore) Δ_{Bs} µm		Width variation V_{Bs} µm
over	incl.	max.	min.	
180	250	0	−300	5
250	315	0	−350	6
315	400	0	−400	7
400	500	0	−450	8

Inner ring tolerances SP

Bore d mm		Bore deviation Δ_{dmp} µm		$\Delta_{d1\,mp} - \Delta_{dmp}$ µm		Variation V_{dp} µm	Radial runout K_{ia} µm	Axial runout S_d µm	 S_{ia} µm
over	incl.								
180	250	30	0	9	0	8	8	6	8
250	315	35	0	11	0	9	9	7	10
315	400	40	0	12	0	12	10	9	12
400	500	45	0	14	0	14	12	11	15

Outer ring tolerances SP

Outside diameter D mm		Outside diameter deviation Δ_{Ds} µm		Variation V_{Dp} µm	Radial runout K_{ea} µm	Axial runout S_D µm	 S_{ea} µm
over	incl.						
250	315	0	−18	9	11	8	10
315	400	0	−20	10	13	10	13
400	500	0	−23	12	15	11	15
500	630	0	−28	14	17	13	18
630	800	0	−35	18	20	15	22



Single row cylindrical roller bearings with cage

Radial internal clearance

The radial internal clearance of bearings with a cylindrical bore normally corresponds to internal clearance group CN to DIN 620-4. This also applies to special cylindrical roller bearings for stranding machines.

Radial internal clearance (cylindrical bore)

Bore d mm		Radial internal clearance					
		CN µm		C3 µm		C4 µm	
over	incl.	min.	max.	min.	max.	min.	max.
140	160	70	120	115	165	165	215
160	180	75	125	120	170	170	220
180	200	90	145	140	195	195	250
200	225	105	165	160	220	220	280
225	250	110	175	170	235	235	300
250	280	125	195	190	260	260	330
280	315	130	205	200	275	275	350
315	355	145	225	225	305	305	385
355	400	190	280	280	370	370	460
400	450	210	310	310	410	410	510
450	500	220	330	330	440	440	550
500	560	240	360	360	480	480	600
560	630	260	380	380	500	500	620
630	710	285	425	425	565	565	705
710	800	310	470	470	630	630	790
800	900	350	520	520	690	690	860
900	1000	390	580	580	770	770	960
1000	1120	430	640	640	850	850	1060
1120	1250	470	710	710	950	950	1190
1250	1400	530	790	790	1050	1050	1310
1400	1600	610	890	890	1170	1170	1450
1600	1800	700	1020	1020	1340	1340	1660
1800	2000	760	1120	1120	1480	1480	1840

Bearings with a tapered bore frequently have a radial internal clearance C3 or C4 to DIN 620-4.

Radial internal clearance (tapered bore)

Bore d mm		Radial internal clearance					
		CN µm		C3 µm		C4 µm	
over	incl.	min.	max.	min.	max.	min.	max.
200	225	155	215	200	260	245	305
225	250	170	235	220	285	270	335
250	280	185	255	240	310	295	365
280	315	205	280	265	340	325	400
315	355	225	305	290	370	355	435
355	400	255	345	330	420	405	495
400	450	285	385	370	470	455	555
450	500	315	425	410	520	505	615
500	560	350	470	455	575	560	680

Radial internal clearance of high precision bearings

The radial internal clearance of high precision bearings is smaller than the normal internal clearance and corresponds to internal clearance group C1NA.
The internal clearance is not stated in the designation.
The bearing rings are not interchangeable.

Radial internal clearance C1NA (tapered bore)

Bore d mm		Radial internal clearance C1NA µm	
over	incl.	min.	max.
225	250	65	100
250	280	75	110
280	315	80	120
315	355	90	135
355	400	100	150
400	450	110	170
450	500	120	190

Cylindrical roller bearings with cage

Single row
Non-locating bearings

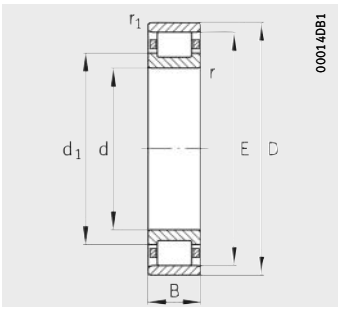

Design 1
N

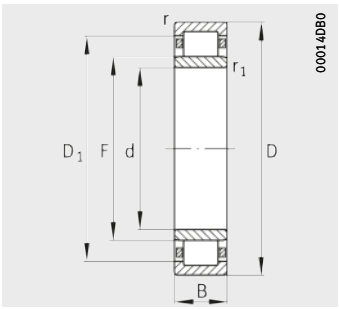

Design 3
NU

Dimension table · Dimensions in mm

Designation		Design	Mass	Dimensions									
	X-life		m ≈kg	d	D	B	r min.	r_1 min.	$s^{2)}$	E	F	D_1 ≈	d_1 ≈
N426-M1	–	1	40,1	**130**	340	78	5	5	6,2	285	–	–	204,2
NU426-M1	–	3	40,6	**130**	340	78	5	5	6,2	285	185	265,9	–
N428-M1	–	1	46,9	**140**	360	82	5	5	7,6	302	–	–	218,2
NU428-M1	–	3	47,4	**140**	360	82	5	5	7,6	302	198	282,9	–
N330-E-M1	**XL**	1	26,9	**150**	320	65	4	4	5,5	283	–	–	209,5
NU330-E-M1	**XL**	3	27	**150**	320	65	4	4	5,5	283	193	269,8	–
NU330-E-M1A	**XL**	3	27	**150**	320	65	4	4	5,5	283	193	269,8	–
NU330-E-MP1A	**XL**	3	26,5	**150**	320	65	4	4	5,5	283	193	269,8	–
NU330-E-MPA	**XL**	3	27,9	**150**	320	65	4	4	5,5	283	193	269,8	–
NU330-E-N-M1	**XL**	$3^{1)}$	27	**150**	320	65	4	4	5,5	283	193	269,8	–
N2330-E-M1	**XL**	1	43,3	**150**	320	108	4	4	9,7	283	–	–	209,5
N2330-E-MP1B	**XL**	1	42,4	**150**	320	108	4	4	9,7	283	–	–	209,5
NU2330-E-M1	**XL**	3	43,4	**150**	320	108	4	4	9,7	283	193	269,8	–
N430-M1	–	1	53,9	**150**	380	85	5	5	8,1	317	–	–	233,2
NU430-M1	–	3	54,4	**150**	380	85	5	5	8,1	317	213	297,9	–
N332-E-M1	–	1	32,6	**160**	340	68	4	4	5,5	300	–	–	221,6
NU332-E-M1	–	3	31,8	**160**	340	68	4	4	5,6	300	204	286	–
NU332-E-M1A	–	3	31,8	**160**	340	68	4	4	5,6	300	204	286	–
NU332-E-MP1A	–	3	32	**160**	340	68	4	4	5,6	300	204	286	–
N2332-E-M1	–	1	51,4	**160**	340	114	4	4	9,9	300	–	–	221,6
N2332-E-M1B	–	1	51,8	**160**	340	114	4	4	9,9	300	–	–	221,6
NU2332-E-M1	–	3	51,5	**160**	340	114	4	4	9,9	300	204	286	–
N432-M1	–	1	61,5	**160**	400	88	5	5	8,3	334	–	–	247,2
NU432-M1	–	3	61,9	**160**	400	88	5	5	8,3	334	226	314,9	–
NU334-E-MPA	–	3	38,4	**170**	360	72	4	4	6	318	218	301,6	–
N334-E-M1	–	1	37,9	**170**	360	72	4	4	5,9	318	–	–	237
NU334-E-M1	–	3	38	**170**	360	72	4	4	6	318	218	301,6	–
N2334-EX-M1	–	1	61	**170**	360	120	4	4	10,2	320	–	–	235,7
N2334-EX-MP1B	–	1	59,9	**170**	360	120	4	4	10,2	320	–	–	235,7
NU2334-EX-M1	–	3	61,4	**170**	360	120	4	4	10,2	320	216	303	–
N434-M1	–	1	70,4	**170**	420	92	5	5	8,7	351	–	–	261,2
NU434-M1	–	3	71,1	**170**	420	92	5	5	8,7	351	239	329,9	–

1) With retaining slot in outer ring.

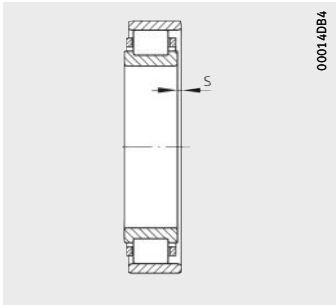

2) Axial displacement “s” for N and NU

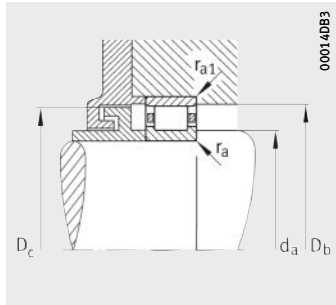

Mounting dimensions for N

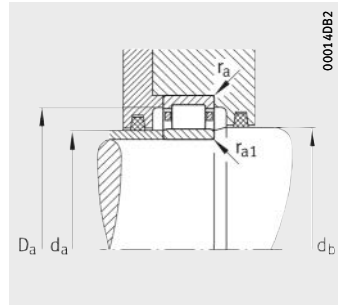

Mounting dimensions for NU

Mounting dimensions								Basic load ratings		Fatigue limit load	Limiting speed	Reference speed
d_a		d_b	D_a	D_b	D_c	r_a	r_{a1}	dyn. C_r	stat. C_{0r}	C_{ur}	n_G	n_B
min.	max.	min.	max.	min.	max.	max.	max.	kN	kN	kN	min^{-1}	min^{-1}
154	–	–	316	287	283	4	4	865	1 020	114	3 200	1 900
154	183	187	316	–	–	4	4	865	1 020	95	3 200	1 900
164	–	–	336	304	300	4	4	930	1 120	123	3 000	1 800
164	195	200	336	–	–	4	4	930	1 120	103	3 000	1 800
167	–	–	303	285	281	3	3	900	930	126	3 600	1 940
167	190	195	303	–	–	3	3	900	930	103	3 600	1 940
167	190	195	303	–	–	3	3	900	930	103	3 600	1 940
167	190	195	303	–	–	3	3	900	930	93	3 600	2 000
167	190	195	303	–	–	3	3	900	930	103	3 600	1 940
167	190	195	303	–	–	3	3	900	930	103	3 600	2 000
167	–	–	303	285	281	3	3	1 380	1 600	226	3 200	1 500
167	–	–	303	285	281	3	3	1 380	1 600	226	3 200	1 500
167	190	195	303	–	–	3	3	1 380	1 600	226	3 200	1 460
174	–	–	356	319	315	4	4	980	1 220	132	2 800	1 600
174	210	216	356	–	–	4	4	980	1 220	111	2 800	1 600
177	–	–	323	302	298	3	3	865	1 060	114	3 000	1 770
177	200	211	323	–	–	3	3	865	1 060	96	3 000	1 770
177	200	211	323	–	–	3	3	865	1 060	96	3 000	1 770
177	200	211	323	–	–	3	3	865	1 060	81	3 000	1 800
177	–	–	323	302	298	3	3	1 320	1 830	204	3 000	1 300
177	–	–	323	302	298	3	3	1 320	1 830	204	3 000	1 300
177	200	211	323	–	–	3	3	1 320	1 830	204	3 000	1 340
184	–	–	376	336	332	4	4	1 060	1 320	142	2 800	1 500
184	223	230	376	–	–	4	4	1 060	1 320	118	2 800	1 500
187	215	221	343	–	–	3	3	915	1 140	98	3 000	1 670
187	–	–	343	320	316	3	3	965	1 220	132	3 000	1 610
187	215	221	343	–	–	3	3	965	1 220	105	3 000	1 610
187	–	–	343	322	318	3	3	1 500	2 080	231	2 800	1 200
187	–	–	343	322	318	3	3	1 500	2 080	231	2 800	1 200
187	214	218	343	–	–	3	3	1 500	2 080	231	2 800	1 210
194	–	–	396	353	349	4	4	1 120	1 400	151	2 800	1 500
194	236	243	396	–	–	4	4	1 120	1 400	126	2 800	1 500

Cylindrical roller bearings with cage

Single row
Non-locating bearings

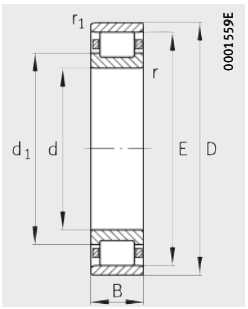

Design 1
N

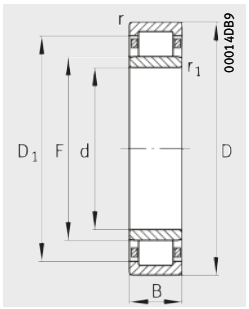

Design 3
NU

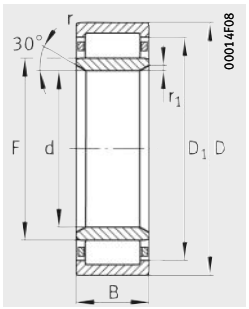

Design 4
NU

Dimension table (continued) · Dimensions in mm

Designation		Design	Mass	Dimensions									
	X-life		m ≈kg	d	D	B	r min.	r_1 min.	$s^{1)}$	E	F	D_1 ≈	d_1 ≈
N236-E-M1	**XL**	1	18,9	**180**	320	52	4	4	4,7	289	–	–	230,2
NU236-E-M1	**XL**	3	18,9	**180**	320	52	4	4	4,7	289	217	278,6	–
NU236-E-M1A	**XL**	3	18,9	**180**	320	52	4	4	4,7	289	217	278,6	–
NU236-E-MP1A	**XL**	3	18,9	**180**	320	52	4	4	4,7	289	217	278,6	–
NU1236-M1	–	3	22,2	**180**	320	62	4	4	4,7	293	213	279,8	–
NU2236-E-M1	**XL**	3	30,7	**180**	320	86	4	4	7,2	291	215	280	–
NU2236-E-M1A	**XL**	3	31,3	**180**	320	86	4	4	7,2	291	215	280	–
N336-E-MP1B	–	1	42,9	**180**	380	75	4	4	6,1	335	–	–	250,5
NU336-E-M1	–	3	43,9	**180**	380	75	4	4	6,1	335	231	319,8	–
NU336-E-M1A	–	3	43,9	**180**	380	75	4	4	6,1	335	231	319,8	–
NU336-E-MP1A	–	3	43,9	**180**	380	75	4	4	6,1	335	231	319,8	–
NU336-E-MPA	–	3	43,9	**180**	380	75	4	4	6,1	335	231	319,8	–
N2336-EX-M1	–	1	71,3	**180**	380	126	4	4	10,5	339	–	–	248
N2336-EX-MP1B	–	1	69,7	**180**	380	126	4	4	10,5	339	–	–	248
NU2336-EX-M1	–	3	71,8	**180**	380	126	4	4	10,5	339	227	320,8	–
NU436-M1	–	3	80,9	**180**	440	95	6	6	8,9	370	250	346,9	–
NU3138-M1	–	3	34,4	**190**	320	104	3	3	9,2	294	222	282,1	–
N238-E-M1	–	1	22,8	**190**	340	55	4	4	4,7	306	–	–	244
N238-E-M1B	–	1	23	**190**	340	55	4	4	4,7	306	–	–	244
NU238-E-M1	–	3	22,8	**190**	340	55	4	4	4,7	306	230	295	–
NU238-E-M1-C3	–	3	22,8	**190**	340	55	4	4	4,7	306	230	295	–
NU238-E-M1A	–	3	22,8	**190**	340	55	4	4	4,7	306	230	295	–
NU238-E-MP1A	–	3	22,2	**190**	340	55	4	4	4,7	306	230	295	–
NU238-E-MPA	–	3	22,2	**190**	340	55	4	4	4,7	306	230	295	–
NU1238-M1	–	3	26,6	**190**	340	65	4	4	4,8	310	226	296,2	–
NU2238-E-M1	–	3	37,1	**190**	340	92	4	4	8	308	228	296,4	–
NU2238-E-M1A	–	3	37,9	**190**	340	92	4	4	8	308	228	296,4	–
Z-549128.ZL	–	4	45,5	**190**	340	114	3	8	7,6	313,1	229,1	299,2	–
N338-E-M1	–	1	50,5	**190**	400	78	5	5	6,3	353	–	–	265,4
NU338-E-M1	–	3	50,6	**190**	400	78	5	5	6,3	353	245	336	–
NU338-E-M1A	–	3	50,6	**190**	400	78	5	5	6,3	353	245	336	–
N2338-EX-M1	–	1	82,5	**190**	400	132	5	5	11	360	–	–	262,5
N2338-EX-MP1B	–	1	80,9	**190**	400	132	5	5	11	360	–	–	262,5
NU2338-EX-M1	–	3	83,1	**190**	400	132	5	5	11	360	240	340,5	–
NU438-M1	–	3	90,6	**190**	460	98	6	6	9,4	385	265	361,9	–

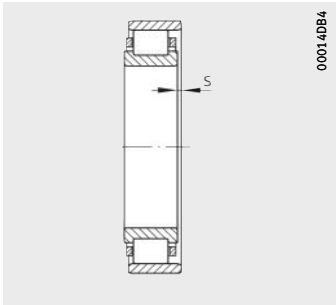

[1] Axial displacement “s” for N and NU

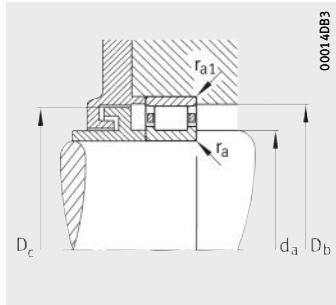

Mounting dimensions for N

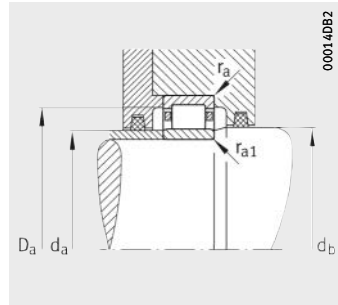

Mounting dimensions for NU

Mounting dimensions								Basic load ratings		Fatigue limit load	Limiting speed	Reference speed
d_a		d_b	D_a	D_b	D_c	r_a	r_{a1}	dyn. C_r	stat. C_{0r}	C_{ur}	n_G	n_B
min.	max.	min.	max.	min.	max.	max.	max.	kN	kN	kN	min^{-1}	min^{-1}
197	–	–	303	292	286	3	3	730	830	112	3 600	1 850
197	214	221	303	–	–	3	3	730	830	93	3 600	1 850
197	214	221	303	–	–	3	3	730	830	93	3 600	1 850
197	214	221	303	–	–	3	3	730	830	85	3 600	1 850
197	210	216	303	–	–	3	–	830	910	100	3 200	2 000
197	214	221	303	–	–	3	3	1 180	1 490	209	3 200	1 380
197	214	221	303	–	–	3	3	1 180	1 490	209	3 200	1 380
197	–	–	363	338	332	3	3	1 040	1 320	141	2 800	1 500
197	228	234	363	–	–	3	3	1 040	1 320	112	2 800	1 500
197	228	234	363	–	–	3	3	1 040	1 320	112	2 800	1 500
197	228	234	363	–	–	3	3	1 040	1 320	87	2 800	1 500
197	228	234	363	–	–	3	3	1 040	1 320	87	2 800	1 500
197	–	–	363	342	336	3	3	1 660	2 320	260	2 800	1 100
197	–	–	363	342	336	3	3	1 660	2 320	260	2 800	1 100
197	225	229	363	–	–	3	3	1 660	2 320	260	2 800	1 120
210	247	254	410	–	–	5	5	1 290	1 630	141	2 600	1 300
204	219	225	306	–	–	2,5	2,5	1 060	1 660	181	2 400	–
207	–	–	323	309	303	3	3	680	930	100	3 200	1 720
207	–	–	323	309	303	3	3	680	930	100	3 200	1 700
207	227	234	323	–	–	3	3	680	930	85	3 200	1 720
207	227	234	323	–	–	3	3	680	930	85	3 200	1 720
207	227	234	323	–	–	3	3	680	930	85	3 200	1 720
207	227	234	323	–	–	3	3	680	930	72	3 200	1 700
207	227	234	323	–	–	3	3	680	930	72	3 200	1 700
207	223	230	323	–	–	3	3	765	1 020	109	3 000	1 800
207	225	232	323	–	–	3	3	1 100	1 660	184	3 000	1 290
207	225	232	323	–	–	3	3	1 100	1 660	184	3 000	1 290
218	227	234	326	–	–	3	7	1 320	2 040	218	2 200	–
210	–	–	380	356	350	4	4	1 120	1 430	151	2 800	1 400
210	242	248	380	–	–	4	4	1 120	1 430	120	2 800	1 400
210	242	248	380	–	–	4	4	1 120	1 430	120	2 800	1 400
210	–	–	380	363	357	4	4	1 900	2 650	285	2 600	1 000
210	–	–	380	363	357	4	4	1 900	2 650	285	2 600	1 000
210	237,8	242,2	380	–	–	4	4	1 900	2 650	285	2 600	1 010
220	262	269	430	–	–	5	5	1 340	1 760	152	2 600	1 200

Cylindrical roller bearings with cage

Single row
Non-locating bearings

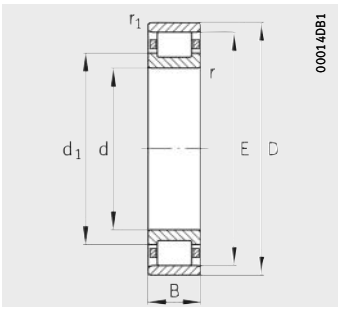

Design 1
N

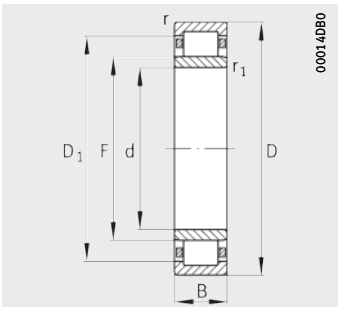

Design 3
NU

Dimension table (continued) · Dimensions in mm

Designation	Design	Mass	Dimensions									
		m	d	D	B	r	r_1	$s^{2)}$	E	F	D_1	d_1
		≈kg				min.	min.				≈	≈
NU3140-M1	3	42,4	**200**	340	112	3	3	10	313	233	300,2	–
N240-E-M1	1	27,2	**200**	360	58	4	4	4,8	323	–	–	257,6
NU240-E-M1	3	27,2	**200**	360	58	4	4	4,8	323	243	311,5	–
NU240-E-M1-C3	3	27,2	**200**	360	58	4	4	4,8	323	243	311,5	–
NU240-E-M1A	3	27,2	**200**	360	58	4	4	4,8	323	243	311,5	–
NU1240-M1	3	32,3	**200**	360	70	4	4	5	328	238	313,1	–
N2240-E-M1	1	44,7	**200**	360	98	4	4	8,2	325	–	–	256,3
N2240-E-MP1B	1	43,9	**200**	360	98	4	4	8,2	325	–	–	256,3
N2240-E-N-M1	$1^{1)}$	44,7	**200**	360	98	4	4	8,2	325	–	–	256,3
N2240-E-N-MP1B	$1^{1)}$	43,9	**200**	360	98	4	4	8,2	325	–	–	256,3
NU2240-E-M1	3	44,7	**200**	360	98	4	4	8,2	325	241	312,9	–
NU2240-E-M1A	3	45,7	**200**	360	98	4	4	8,2	325	241	312,9	–
NU2240-E-MPA	3	44,4	**200**	360	98	4	4	8,2	325	241	312,9	–
N340-E-M1	1	57	**200**	420	80	5	5	6,3	370	–	–	279
NU340-E-M1	3	57,3	**200**	420	80	5	5	6,3	370	258	351,8	–
NU340-E-M1A	3	57,3	**200**	420	80	5	5	6,3	370	258	351,8	–
NU340-E-MP1A	3	57	**200**	420	80	5	5	6,3	370	258	351,8	–
NU2340-EX-M1	3	95,6	**200**	420	138	5	5	11,3	377	253	356,9	–
NU440-M1	3	103	**200**	480	102	6	6	9,4	404	276	378,9	–

1) With retaining slot in outer ring.

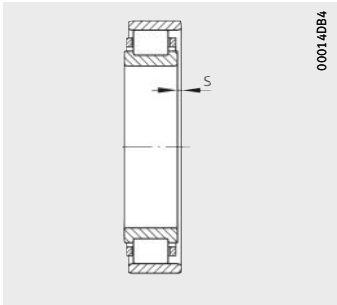

[2] Axial displacement “s” for N and NU

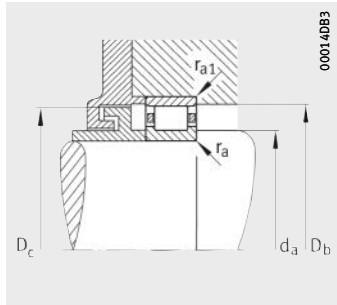

Mounting dimensions for N

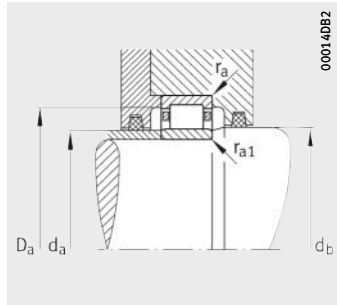

Mounting dimensions for NU

Mounting dimensions								Basic load ratings		Fatigue limit load	Limiting speed	Reference speed
d_a		d_b	D_a	D_b	D_c	r_a	r_{a1}	dyn. C_r	stat. C_{0r}	C_{ur}	n_G	n_B
min.	max.	min.	max.	min.	max.	max.	max.	kN	kN	kN	min^{-1}	min^{-1}
214	230	236	326	–	–	2,5	2,5	1 290	2 080	230	2 800	1 500
217	–	–	343	326	320	3	3	750	1 040	110	3 000	1 600
217	240	247	343	–	–	3	3	750	1 040	94	3 000	1 600
217	240	247	343	–	–	3	3	750	1 040	94	3 000	1 600
217	240	247	343	–	–	3	3	750	1 040	94	3 000	1 600
217	235	241	343	–	–	3	3	880	1 160	122	2 800	1 700
217	–	–	343	328	322	3	3	1 220	1 860	205	2 800	1 200
217	–	–	343	328	322	3	3	1 220	1 860	205	2 800	1 200
217	–	–	343	328	322	3	3	1 220	1 860	205	2 800	1 200
217	–	–	343	328	322	3	3	1 220	1 860	205	2 800	1 200
217	240	247	343	–	–	3	3	1 220	1 860	206	2 800	1 180
217	240	247	343	–	–	3	3	1 220	1 860	206	2 800	1 180
217	240	247	343	–	–	3	3	1 220	1 860	206	2 800	1 200
220	–	–	400	373	367	4	4	1 180	1 530	161	2 600	1 320
220	255	261	400	–	–	4	4	1 180	1 530	128	2 600	1 320
220	255	261	400	–	–	4	4	1 180	1 530	128	2 600	1 320
220	255	261	400	–	–	4	4	1 180	1 530	99	2 600	1 300
220	250,7	255,3	400	–	–	4	4	2 040	2 900	310	2 400	940
230	273	280	450	–	–	5	5	1 460	1 860	159	2 400	1 200

Cylindrical roller bearings with cage

Single row
Non-locating bearings

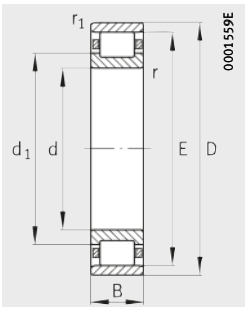

Design 1
N

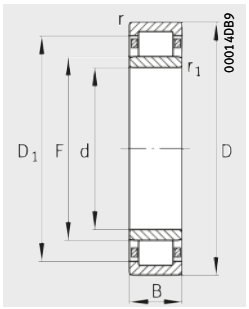

Design 3
NU, cylindrical or tapered bore

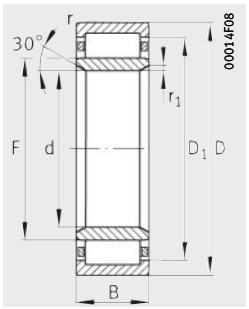

Design 4
NU

Dimension table (continued) · Dimensions in mm

Designation	Design	Mass	Dimensions									
		m	d	D	B	r	r_1	$s^{1)}$	E	F	D_1	d_1
		≈kg				min.	min.				≈	≈
N1044-M1	1	20,4	**220**	340	56	3	3	6,2	310	–	–	261,7
N1044-M1B	1	18,8	**220**	340	56	3	3	6,2	310	–	–	261,7
NU1044-K-M1	3	18,3	**220**	340	56	3	–	6,2	310	250	298,9	–
NU1044-K-M1A	3	18,7	**220**	340	56	3	–	6,2	310	250	298,9	–
NU1044-M1	3	20,5	**220**	340	56	3	3	6,2	310	250	298,9	–
NU1044-M1-C3	3	20,5	**220**	340	56	3	3	6,2	310	250	298,9	–
NU1044-M1A	3	19	**220**	340	56	3	3	6,2	310	250	298,9	–
NU1044-MP1A	3	18,2	**220**	340	56	3	3	6,2	310	250	298,9	–
NU2044-E-M1	3	25,1	**220**	340	72	3	3	4	314	250	302,8	–
NU3044-M1	3	30,9	**220**	340	90	3	3	2,5	310	250	298,9	–
Z-546293.ZL	3	37,2	**220**	350	98	3	3	6,7	323	247	310,4	–
NU3144-M1	3	52,6	**220**	370	120	4	4	10,2	340	256	326,1	–
N244-E-M1	1	38,2	**220**	400	65	4	4	5,5	358	–	–	285,2
NU244-E-M1	3	38,1	**220**	400	65	4	4	5,5	358	268	344,9	–
NU244-E-M1A	3	38,1	**220**	400	65	4	4	5,5	358	268	344,9	–
NU244-E-MP1A	3	38,3	**220**	400	65	4	4	5,5	358	268	344,9	–
NU1244-M1	3	45,2	**220**	400	78	4	4	5,7	365	261	348	–
NU2244-EX-M1	3	61,6	**220**	400	108	4	4	8,4	367	259	349,4	–
NU2244-EX-M1A	3	62,8	**220**	400	108	4	4	8,4	367	259	349,4	–
NU2244-EX-MP1A	3	60,4	**220**	400	108	4	4	8,4	367	259	349,4	–
Z-548409.ZL	4	75,1	**220**	400	133	3	9,5	–	366,1	266,1	349,6	–
N344-E-M1	1	75,5	**220**	460	88	5	5	7	406	–	–	305,1
NU344-E-M1	3	75,5	**220**	460	88	5	5	7	406	282	386	–
NU344-E-M1A	3	75,5	**220**	460	88	5	5	7	406	282	386	–
NU2344-EX-M1	3	121	**220**	460	145	5	5	11,9	413	277	391,2	–
NU444-M1	3	150	**220**	540	115	6	6	10	455	305	426,1	–

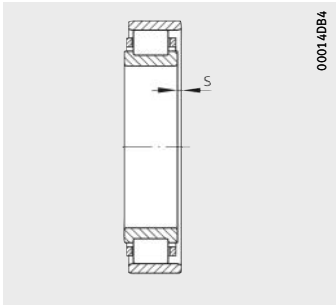

1) Axial displacement “s” for N and NU

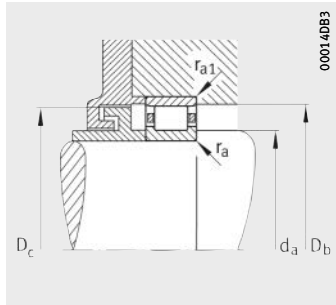

Mounting dimensions for N

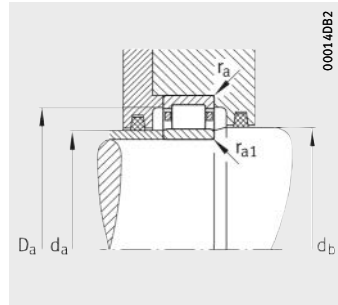

Mounting dimensions for NU

Mounting dimensions								Basic load ratings		Fatigue limit load	Limiting speed	Reference speed
d_a		d_b	D_a	D_b	D_c	r_a	r_{a1}	dyn. C_r	stat. C_{0r}	C_{ur}	n_G	n_B
min.	max.	min.	max.	min.	max.	max.	max.	kN	kN	kN	min^{-1}	min^{-1}
232	–	–	328	313	307	2,5	2,5	510	765	80	3 200	2 000
232	–	–	328	313	307	2,5	2,5	510	765	80	3 200	2 000
232	248	254	328	–	–	2,5	–	510	765	69	3 200	2 040
232	248	254	328	–	–	2,5	–	510	765	69	3 200	2 000
232	248	254	328	–	–	2,5	2,5	510	765	69	3 200	2 040
232	248	254	328	–	–	2,5	2,5	510	765	69	3 200	2 040
232	248	254	328	–	–	2,5	2,5	510	765	69	3 200	2 040
232	248	254	328	–	–	2,5	2,5	510	765	60	3 200	2 040
232	247	253	328	–	–	2,5	2,5	880	1 460	161	3 000	1 500
232	246	254	328	–	–	2,5	2,5	965	1 730	191	3 000	1 400
232	243	251	338	–	–	2,5	2,5	1 250	2 080	231	2 800	–
237	253	259	353	–	–	3	3	1 460	2 400	265	2 800	1 300
237	–	–	383	361	355	3	3	950	1 320	135	2 800	1 400
237	265	271	383	–	–	3	3	950	1 320	109	2 800	1 380
237	265	271	383	–	–	3	3	950	1 320	109	2 800	1 380
237	265	271	383	–	–	3	3	950	1 320	87	2 800	1 400
237	257	264	383	–	–	3	3	1 080	1 430	150	2 800	1 500
237	256,7	261,3	383	–	–	3	3	1 630	2 360	250	2 600	1 000
237	256,7	261,3	383	–	–	3	3	1 630	2 360	250	2 600	1 000
237	256,7	261,3	383	–	–	3	3	1 630	2 360	250	2 600	1 000
260	263	269	386	–	–	2,5	8	1 900	3 000	320	2 600	1 100
240	–	–	440	409	403	4	4	1 430	1 900	192	2 400	1 100
240	279	285	440	–	–	4	4	1 430	1 900	152	2 400	1 140
240	279	285	440	–	–	4	4	1 430	1 900	152	2 400	1 140
240	274,7	279,3	440	–	–	4	4	2 360	3 350	340	2 200	830
250	302	309	510	–	–	5	5	1 960	2 550	209	2 200	950

Cylindrical roller bearings with cage

Single row
Non-locating bearings

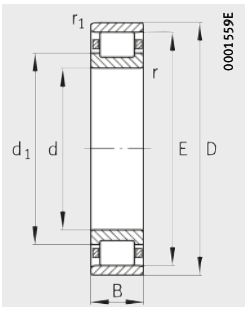

Design 1
N

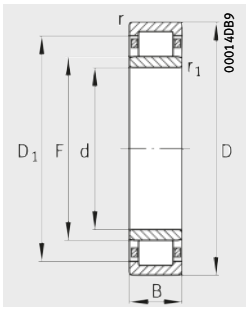

Design 3
NU, cylindrical or tapered bore

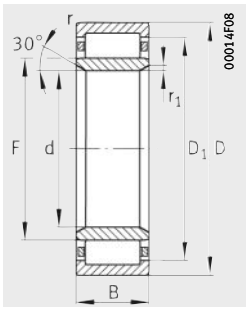

Design 4
NU

Dimension table (continued) · Dimensions in mm

Designation	Design	Mass	Dimensions									
		m	d	D	B	r	r_1	$s^{1)}$	E	F	D_1	d_1
		≈kg				min.	min.				≈	≈
NU1948-M1	3	8,37	**240**	320	38	2,1	1,5	4,6	299	261	292,6	–
NU3948-E-M1	3	13,6	**240**	320	60	2,1	1,5	3,2	302	260	295	–
NU3948-E-MP1A	3	13,5	**240**	320	60	2,1	1,5	5,3	302	260	295	–
N1048-M1	1	19,8	**240**	360	56	3	3	6,4	330	–	–	281,6
N1048-M1B	1	20	**240**	360	56	3	3	6,4	330	–	–	281,6
NU1048-K-M1	3	20	**240**	360	56	3	–	6,4	330	270	318,9	–
NU1048-M1	3	19,9	**240**	360	56	3	3	6,4	330	270	318,9	–
NU1048-M1-C3	3	19,9	**240**	360	56	3	3	6,4	330	270	318,9	–
NU1048-M1A	3	20,2	**240**	360	56	3	3	6,4	330	270	318,9	–
NU1048-MP1A	3	19,2	**240**	360	56	3	3	6,4	330	270	318,9	–
NU2048-E-M1	3	26,6	**240**	360	72	3	3	1,9	334	270	322,8	–
NU3048-M1	3	33,6	**240**	360	92	3	3	9,8	330	270	318,9	–
NU3148-M1	3	64,8	**240**	400	128	4	4	12	368	278	353,2	–
N248-E-M1	1	51,5	**240**	440	72	4	4	6	393	–	–	312
NU248-E-M1	3	51,8	**240**	440	72	4	4	6	393	293	376,6	–
NU248-E-M1A	3	51,8	**240**	440	72	4	4	6	393	293	376,6	–
NU1248-M1	3	60,4	**240**	440	85	4	4	6,5	399	287	380,8	–
NU2248-EX-M1	3	82,8	**240**	440	120	4	4	10,2	399	287	380,7	–
NU2248-EX-M1A	3	84,3	**240**	440	120	4	4	10,2	399	287	380,7	–
NU2248-EX-MPA	3	83,3	**240**	440	120	4	4	10,2	399	287	380,7	–
Z-548410.ZL	4	102	**240**	440	146	3	9,5	–	401,4	291,4	383,4	–
NU348-E-M1	3	95,7	**240**	500	95	5	5	7,4	442	306	421,2	–
NU2348-EX-M1	3	151	**240**	500	155	5	5	13,3	447	303	424	–
NU448-M1	3	176	**240**	580	122	6	6	10,9	490	330	459,1	–
Z-544518.ZL	3	54,1	**241**	375	127	10	4	–	342,5	282,5	332,6	–
Z-549124.ZL	3	59,7	**250**	410	111	4	4	–	378	282	362,3	–

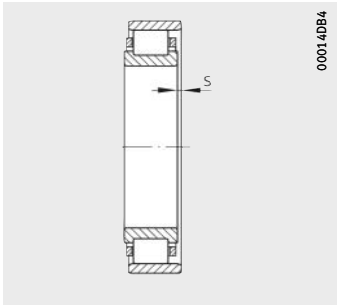

1) Axial displacement “s” for N and NU

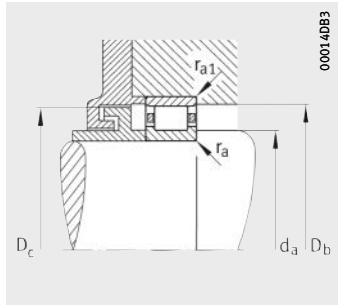

Mounting dimensions for N

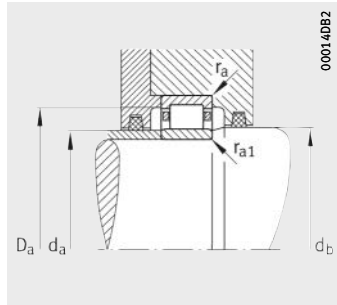

Mounting dimensions for NU

Mounting dimensions								Basic load ratings		Fatigue limit load	Limiting speed	Reference speed
d_a		d_b	D_a	D_b	D_c	r_a	r_{a1}	dyn. C_r	stat. C_{0r}	C_{ur}	n_G	n_B
min.	max.	min.	max.	min.	max.	max.	max.	kN	kN	kN	min^{-1}	min^{-1}
248	258	264	309	–	–	2	1,5	330	490	44	3 800	–
248	257	263	309	–	–	2	1,5	700	1 200	130	3 200	1 400
248	257	263	309	–	–	2	1,5	700	1 200	130	3 200	1 400
252	–	–	348	333	327	2,5	2,5	540	850	86	3 000	1 800
252	–	–	348	333	327	2,5	2,5	540	850	86	3 000	1 800
252	268	275	348	–	–	2,5	–	540	850	64	3 000	1 800
252	268	275	348	–	–	2,5	2,5	540	850	74	3 000	1 850
252	268	275	348	–	–	2,5	2,5	540	850	74	3 000	1 850
252	268	275	348	–	–	2,5	2,5	540	850	74	3 000	1 850
252	268	275	348	–	–	2,5	2,5	540	850	64	3 000	1 850
252	269	275	348	–	–	2,5	2,5	915	1 600	172	2 800	1 400
252	266	274	348	–	–	2,5	2,5	1 000	1 900	205	2 800	1 300
257	275	281	383	–	–	3	3	1 660	2 800	295	2 600	1 100
257	–	–	423	396	390	3	3	1 140	1 600	163	2 600	1 220
257	290	296	423	–	–	3	3	1 140	1 600	132	2 600	1 220
257	290	296	423	–	–	3	3	1 140	1 600	132	2 600	1 220
257	284,5	289,5	423	–	–	3	3	1 290	1 760	183	2 400	1 300
257	284,5	289,5	423	–	–	3	3	1 830	2 800	295	2 400	900
257	284,5	289,5	423	–	–	3	3	1 830	2 800	295	2 400	900
257	284,5	289,5	423	–	–	3	3	1 830	2 800	295	2 400	900
280	288	294	426	–	–	2,5	8	2 240	3 600	380	2 400	1 000
260	303	309	480	–	–	4	4	1 730	2 280	176	2 200	1 000
260	300,5	305,5	480	–	–	4	4	2 600	3 750	375	2 000	750
270	327	334	550	–	–	5	5	2 240	2 900	198	1 900	850
258	279	285	340	–	–	8	3	1 400	2 900	215	1 800	–
267	279	285	393	–	–	3	3	1 630	2 600	270	2 600	1 100

Cylindrical roller bearings with cage

Single row
Non-locating bearings

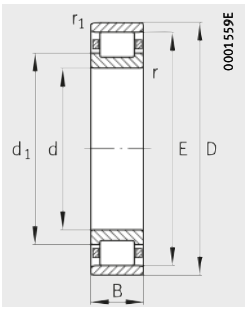

Design 1
N

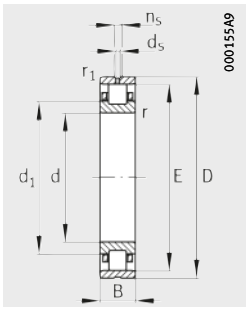

Design 2
N with lubrication groove and holes

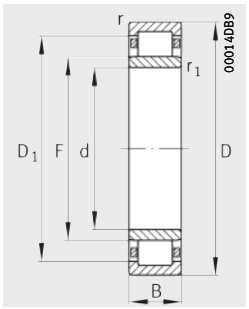

Design 3
NU, cylindrical or tapered bore

Dimension table (continued) · Dimensions in mm

Designation	Design	Mass	Dimensions											
		m	d	D	B	r	r_1	$s^{1)}$	E	F	D_1	d_1	d_s	n_s
		≈kg				min.	min.				≈	≈		
Z-541924.ZL	2	4,62	**260**	320	28	2	1,1	5	306	–	–	284	2	6,5
NU1852-M1	3	4,83	**260**	320	28	2	1,1	3,2	307	275	300,6	–	–	–
NU3852-M1	3	7,9	**260**	320	45	2	1,1	4,6	307	275	300,6	–	–	–
NU1952-M1	3	14,2	**260**	360	46	2,1	1,5	5,3	334	286	324,4	–	–	–
NU3952-E-M1	3	23,1	**260**	360	75	2,1	1,5	4,3	338	286	329,3	–	–	–
N1052-M1	1	29,4	**260**	400	65	4	4	7,2	364	–	–	309,1	–	–
N1052-M1B	1	29,9	**260**	400	65	4	4	7,2	364	–	–	309,1	–	–
NU1052-K-M1	3	29,2	**260**	400	65	4	–	7,2	364	296	351,3	–	–	–
NU1052-M1	3	29,7	**260**	400	65	4	4	7,2	364	296	351,3	–	–	–
NU1052-M1-C3	3	29,7	**260**	400	65	4	4	7,2	364	296	351,3	–	–	–
NU1052-M1A	3	29,9	**260**	400	65	4	4	7,2	364	296	351,3	–	–	–
NU1052-MP1A	3	29	**260**	400	65	4	4	7,2	364	296	351,3	–	–	–
NU2052-E-M1	3	39,5	**260**	400	82	4	4	6,2	370	294	356,3	–	–	–
NU3052-M1	3	49,3	**260**	400	104	4	4	9,7	364	296	351,3	–	–	–
NU3152-M1	3	89,7	**260**	440	144	4	4	13,5	404	304	388,2	–	–	–
NU252-E-M1	3	68,4	**260**	480	80	5	5	6,2	429	317	410,8	–	–	–
NU252-E-M1A	3	68,4	**260**	480	80	5	5	6,2	429	317	410,8	–	–	–
NU1252-M1	3	77	**260**	480	90	5	5	6,7	433	313	413,6	–	–	–
NU2252-E-M1	3	109	**260**	480	130	5	5	10,5	433	313	413,6	–	–	–
NU2252-E-M1A	3	111	**260**	480	130	5	5	10,5	433	313	413,6	–	–	–
NU2252-E-MP1A	3	108	**260**	480	130	5	5	10,5	433	313	413,6	–	–	–
NU352-E-M1	3	121	**260**	540	102	6	6	10	477	337	454,6	–	–	–
NU2352-EX-M1	3	189	**260**	540	165	6	6	13,7	484	324	458,4	–	–	–
Z-547407.ZL	1	12,8	**279**	368	44	4	4	4	348	–	–	306,1	–	–
NU1856-M1	3	7,1	**280**	350	33	2	1,1	4	333	299	327,1	–	–	–
NU1956-M1	3	15	**280**	380	46	2,1	1,5	5,2	354	306	345,4	–	–	–
NU3956-E-M1	3	24,8	**280**	380	75	2,1	1,5	6,6	358	306	349,3	–	–	–
N1056-M1	1	31,3	**280**	420	65	4	4	7,2	384	–	–	329,1	–	–
N1056-M1B	1	31,3	**280**	420	65	4	4	7,2	384	–	–	329,1	–	–
NU1056-M1	3	31,4	**280**	420	65	4	4	7,2	384	316	371,3	–	–	–
NU1056-M1-C3	3	31,4	**280**	420	65	4	4	7,2	384	316	371,3	–	–	–
NU1056-M1A	3	31,7	**280**	420	65	4	4	7,2	384	316	371,3	–	–	–
NU1056-MP1A	3	30,9	**280**	420	65	4	4	7,2	384	316	371,3	–	–	–

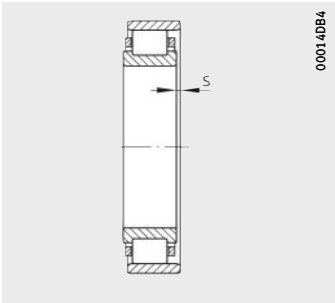

1) Axial displacement “s” for N and NU

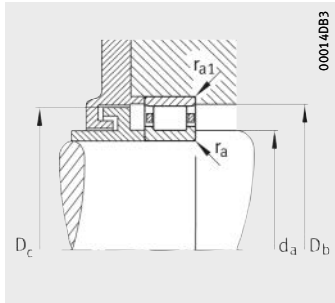

Mounting dimensions for N

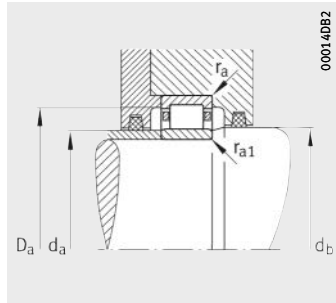

Mounting dimensions for NU

Mounting dimensions								Basic load ratings		Fatigue limit load	Limiting speed	Reference speed
d_a		d_b	D_a	D_b	D_c	r_a	r_{a1}	dyn. C_r	stat. C_{0r}	C_{ur}	n_G	n_B
min.	max.	min.	max.	min.	max.	max.	max.	kN	kN	kN	min^{-1}	min^{-1}
269	–	–	311	310	302	2	1,1	106	176	13,5	3 800	–
269	272	278	311	–	–	2	1	270	440	39	3 600	–
269	272	278	311	–	–	2	1	485	930	100	3 200	1 300
268	283	289	349	–	–	2	1,5	425	735	64	3 000	–
268	283	289	349	–	–	2	1,5	830	1 660	179	2 800	1 200
275	–	–	385	366,5	361,5	3	3	655	1 020	104	2 800	1 700
275	–	–	385	366,5	361,5	3	3	655	1 020	104	2 800	1 700
275	292	300	385	–	–	3	–	655	1 020	90	2 800	1 690
275	292	300	385	–	–	3	3	655	1 020	90	2 800	1 690
275	292	300	385	–	–	3	3	655	1 020	90	2 800	1 690
275	292	300	385	–	–	3	3	655	1 020	90	2 800	1 690
275	292	300	385	–	–	3	3	655	1 020	77	2 800	1 690
275	291	297	385	–	–	3	3	1 200	2 080	217	2 600	1 200
275	292	300	385	–	–	3	3	1 270	2 400	255	2 800	1 100
277	301	307	423	–	–	3	3	2 040	3 400	355	2 400	1 000
280	314	320	460	–	–	4	4	1 340	1 900	154	2 400	1 110
280	314	320	460	–	–	4	4	1 340	1 900	154	2 400	1 110
280	310	316	460	–	–	4	4	1 460	2 040	204	2 200	1 100
280	310	316	460	–	–	4	4	2 160	3 350	345	2 200	780
280	310	316	460	–	–	4	4	2 160	3 350	345	2 200	780
280	310	316	460	–	–	4	4	2 160	3 350	345	2 200	800
286	334,3	339,7	514	–	–	5	5	1 900	2 600	198	2 000	900
286	321,3	326,7	514	–	–	5	5	3 100	4 500	435	1 800	660
294	–	–	353	351	345	3	3	490	850	87	2 800	–
289	296	302	341	–	–	2	1	255	500	43	3 200	–
288	303	309	369	–	–	2	1,5	440	800	68	2 800	–
288	303	309	369	–	–	2	1,5	865	1 760	188	2 800	1 100
295	–	–	405	386	382	3	3	680	1 100	112	2 800	1 500
295	–	–	405	386	382	3	3	680	1 100	112	2 800	1 500
295	312	321	405	–	–	3	3	680	1 100	96	2 800	1 550
295	312	321	405	–	–	3	3	680	1 100	96	2 800	1 550
295	312	321	405	–	–	3	3	680	1 100	96	2 800	1 550
295	312	321	405	–	–	3	3	695	1 140	86	2 800	1 530

Cylindrical roller bearings with cage

Single row
Non-locating bearings

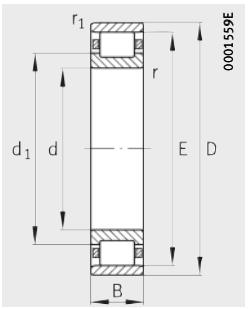

Design 1
N

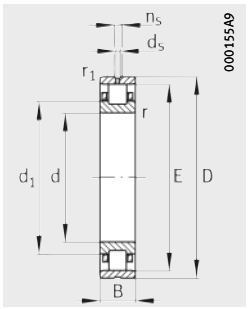

Design 2
N with lubrication groove and holes

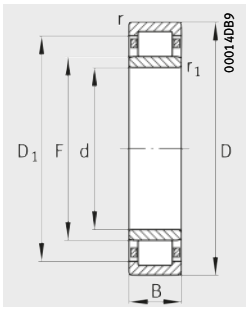

Design 3
NU

Dimension table (continued) · Dimensions in mm

Designation	Design	Mass	Dimensions											
		m	d	D	B	r	r_1	$s^{1)}$	E	F	D_1	d_1	d_s	n_s
		≈kg				min.	min.				≈	≈		
NU2056-E-M1	3	41,8	**280**	420	82	4	4	6,2	390	314	376,3	–	–	–
NU3056-M1	3	53,2	**280**	420	106	4	4	9,8	384	316	371,3	–	–	–
NU3156-M1	3	96,6	**280**	460	146	5	5	14	424	324	407,6	–	–	–
NU256-E-M1	3	72,1	**280**	500	80	5	5	6,3	449	337	430,8	–	–	–
NU256-E-M1A	3	72,1	**280**	500	80	5	5	6,3	449	337	430,8	–	–	–
NU1256-M1	3	81,2	**280**	500	90	5	5	6,7	453	333	434	–	–	–
NU2256-E-M1	3	114	**280**	500	130	5	5	10,5	453	333	436	–	–	–
NU2256-E-M1A	3	118	**280**	500	130	5	5	10,5	453	333	436	–	–	–
NU2256-E-MP1A	3	113	**280**	500	130	5	5	10,5	453	333	436	–	–	–
NU356-E-M1	3	147	**280**	580	108	6	6	8,7	512	362	488	–	–	–
NU2356-EX-M1	3	234	**280**	580	175	6	6	13,8	521	351	493,8	–	–	–
Z-527791.ZL	2	9,65	**300**	380	38	2,1	2,1	7	362	–	–	329,9	3,2	9,5
NU1860-M1	3	9,96	**300**	380	38	2,1	1,5	4,3	362	322	355,2	–	–	–
N2860-M1	1	12,8	**300**	380	48	2,1	1,5	5,3	362	–	–	328,7	–	–
NU2860-M1	3	12,9	**300**	380	48	2,1	1,5	5,3	362	322	355,2	–	–	–
NU3860-M1	3	16,4	**300**	380	60	2,1	1,5	6	362	322	355,2	–	–	–
NU1960-M1	3	23,7	**300**	420	56	3	3	6,5	390	330	378	–	–	–
NU3960-E-M1	3	38,6	**300**	420	90	3	3	7,5	394	330	383,3	–	–	–
NU3960-E-M1A	3	38,6	**300**	420	90	3	3	7,5	394	330	383,3	–	–	–
N1060-M1	1	44,3	**300**	460	74	4	4	7,9	420	–	–	355,7	–	–
NU1060-M1	3	44,6	**300**	460	74	4	4	7,9	420	340	405,2	–	–	–
NU1060-M1-C3	3	44,6	**300**	460	74	4	4	7,9	420	340	405,2	–	–	–
NU1060-M1A	3	44,6	**300**	460	74	4	4	7,9	420	340	405,2	–	–	–
NU1060-MP1A	3	43,5	**300**	460	74	4	4	7,9	420	340	405,2	–	–	–
NU3060-M1	3	74	**300**	460	118	4	4	10,5	420	340	405,2	–	–	–
NU3160-M1	3	126	**300**	500	160	5	5	4,2	460	348	442,4	–	–	–
NU260-E-M1	3	90,4	**300**	540	85	5	5	6,9	484	364	464,6	–	–	–
NU260-E-M1A	3	90,4	**300**	540	85	5	5	6,9	484	364	464,6	–	–	–
NU1260-M1	3	103	**300**	540	98	5	5	7,2	487	359	466,4	–	–	–
NU2260-EX-MPA	3	147	**300**	540	140	5	5	12,2	495	355	472,6	–	–	–
NU2260-EX-M1	3	143	**300**	540	140	5	5	12,2	495	355	472,6	–	–	–
NU2260-EX-M1A	3	143	**300**	540	140	5	5	12,2	495	355	472,6	–	–	–
NU360-E-M1	3	171	**300**	620	109	7,5	7,5	8,9	542	392	518	–	–	–

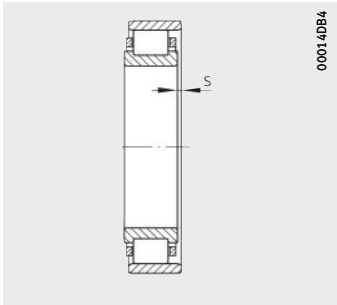

[1] Axial displacement “s” for N and NU

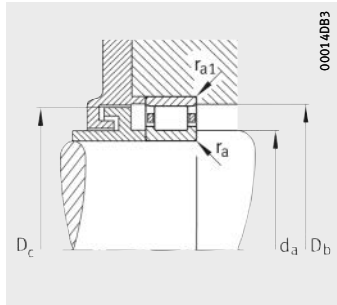

Mounting dimensions for N

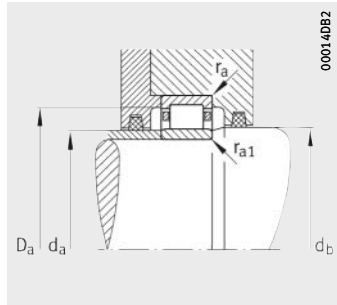

Mounting dimensions for NU

Mounting dimensions								Basic load ratings		Fatigue limit load	Limiting speed	Reference speed
d_a		d_b	D_a	D_b	D_c	r_a	r_{a1}	dyn. C_r	stat. C_{0r}	C_{ur}	n_G	n_B
min.	max.	min.	max.	min.	max.	max.	max.	kN	kN	kN	min^{-1}	min^{-1}
295	311	317	405	–	–	3	3	1 220	2 160	224	2 600	1 100
295	312	320	405	–	–	3	3	1 340	2 600	275	2 600	1 000
300	321	327	440	–	–	4	4	2 080	3 650	370	2 200	950
300	334	340	480	–	–	4	4	1 400	2 000	163	2 200	1 020
300	334	340	480	–	–	4	4	1 400	2 000	163	2 200	1 020
300	330	336	480	–	–	4	4	1 530	2 200	215	2 200	1 000
300	330	336	480	–	–	4	4	2 280	3 600	360	2 000	720
300	330	336	480	–	–	4	4	2 280	3 600	360	2 000	720
300	330	336	480	–	–	4	4	2 280	3 600	360	2 000	700
306	359	366	554	–	–	5	5	2 160	3 050	224	1 900	790
306	348	354	554	–	–	5	5	3 550	5 200	495	1 600	590
310	–	–	370	366	358	2,1	2,1	204	325	25	2 800	–
310	319	325	370	–	–	2	1,5	335	640	55	2 800	–
310	–	–	370	366	358	2	1,5	475	1 000	101	2 800	1 200
310	319	325	370	–	–	2	1,5	475	1 000	101	2 800	1 200
310	319	325	370	–	–	2	1,5	610	1 400	143	2 800	1 100
312	327	333	408	–	–	2,5	2,5	600	1 020	87	2 800	–
312	327	333	408	–	–	2,5	2,5	1 180	2 360	242	2 600	950
312	327	333	408	–	–	2,5	2,5	1 180	2 360	242	2 600	950
315	–	–	445	422	418	3	3	900	1 430	139	2 400	1 400
315	336	345	445	–	–	3	3	900	1 430	120	2 400	1 390
315	336	345	445	–	–	3	3	900	1 430	120	2 400	1 390
315	336	345	445	–	–	3	3	900	1 430	120	2 400	1 390
315	336	345	445	–	–	3	3	900	1 430	105	2 400	1 390
315	336	344	445	–	–	3	3	1 700	3 250	335	2 400	900
320	345	351	480	–	–	4	4	2 500	4 300	435	2 000	850
320	359	367	520	–	–	4	4	1 600	2 320	182	2 000	920
320	359	367	520	–	–	4	4	1 600	2 320	182	2 000	920
320	–	–	520	491	483	4	4	1 730	2 500	242	2 000	950
320	352	358	520	–	–	4	4	2 550	3 900	375	1 200	670
320	352	358	520	–	–	4	4	2 700	4 150	395	1 900	650
320	352	358	520	–	–	4	4	2 700	4 150	395	1 900	650
332	389	395	588	–	–	6	6	2 280	3 250	238	1 800	750

Cylindrical roller bearings with cage

Single row
Non-locating bearings

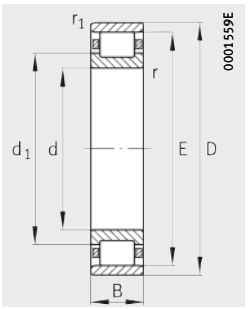

Design 1
N

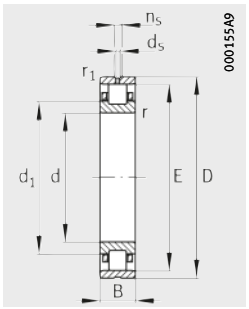

Design 2
N with lubrication groove and holes

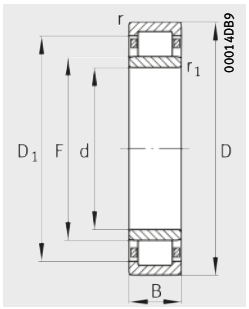

Design 3
NU

Dimension table (continued) · Dimensions in mm

Designation	De-sign	Mass	Dimensions											
		m	d	D	B	r	r_1	$s^{1)}$	E	F	D_1	d_1	d_s	n_s
		≈kg				min.	min.				≈	≈		
Z-527454.ZL	2	10,2	**320**	400	38	2	2	7	381	–	–	349	3,2	9,5
NU1864-M1	3	10,8	**320**	400	38	2,1	1,5	4,3	381	341	373,8	–	–	–
NU3864-M1	3	17,5	**320**	400	60	2,1	1,5	6	381	341	373,8	–	–	–
NU1964-M1	3	25,1	**320**	440	56	3	3	6,2	410	350	398	–	–	–
NU2964-M1	3	33,2	**320**	440	72	3	3	7	410	350	398	–	–	–
NU3964-E-M1	3	41,5	**320**	440	90	3	3	4,7	414	350	403,3	–	–	–
N1064-M1	1	46,5	**320**	480	74	4	4	8	440	–	–	375,4	–	–
NU1064-M1	3	46,9	**320**	480	74	4	4	8	440	360	425,1	–	–	–
NU1064-M1-C3	3	46,9	**320**	480	74	4	4	8	440	360	425,1	–	–	–
NU1064-M1A	3	46,9	**320**	480	74	4	4	8	440	360	425,1	–	–	–
NU1064-MP1A	3	45,8	**320**	480	74	4	4	8	440	360	425,1	–	–	–
NU3064-M1	3	79,3	**320**	480	121	4	4	11,5	440	360	425,1	–	–	–
NU3164-M1	3	168	**320**	540	176	5	5	12	496	368	475,4	–	–	–
NU264-EX-M1	3	113	**320**	580	92	5	5	7,5	520	392	499,4	–	–	–
NU264-EX-M1A	3	113	**320**	580	92	5	5	7,5	520	392	499,4	–	–	–
NU1264-M1	3	130	**320**	580	105	5	5	7,3	523	383	500,6	–	–	–
NU2264-EX-M1	3	180	**320**	580	150	5	5	11,9	530	380	506	–	–	–
NU2264-EX-M1A	3	184	**320**	580	150	5	5	11,9	530	380	506	–	–	–
NU364-E-M1	3	214	**320**	670	112	7,5	7,5	8,9	580	420	554	–	–	–
NU2364-E-M1	3	356	**320**	670	200	7,5	7,5	16	602	402	570	–	–	–
Z-527455.ZL	2	10,6	**340**	420	38	2,1	2,1	7	401,5	–	–	369,3	3,2	9,5
NU1868-M1	3	11,3	**340**	420	38	2,1	1,5	4,3	401,5	361,5	394,7	–	–	–
NU3868-M1	3	18,4	**340**	420	60	2,1	1,5	6	401,5	361,5	394,7	–	–	–
NU1968-M1	3	27,2	**340**	460	56	3	3	6,5	430	370	418	–	–	–
NU2968-M1	3	34,6	**340**	460	72	3	3	7	430	370	418	–	–	–
NU3968-E-M1	3	43,8	**340**	460	90	3	3	4,7	434	370	423,3	–	–	–
NU1068-MPA	3	65,1	**340**	520	82	5	5	8,9	475	385	458,2	–	–	–
N1068-M1	1	62,8	**340**	520	82	5	5	8,9	475	–	–	402,2	–	–
NU1068-M1	3	63,2	**340**	520	82	5	5	8,9	475	385	458,2	–	–	–
NU1068-M1-C3	3	63,2	**340**	520	82	5	5	8,9	475	385	458,2	–	–	–
NU1068-M1A	3	63,2	**340**	520	82	5	5	8,9	475	385	458,2	–	–	–
NU3168-M1A	3	209	**340**	580	190	5	5	17,3	527	399	507,2	–	–	–
NU268-E-M1	3	133	**340**	620	92	6	6	7,4	547	419	526,4	–	–	–
NU1268-M1	3	165	**340**	620	118	6	6	8,3	558	408	534	–	–	–
NU2268-E-M1	3	229	**340**	620	165	6	6	13,3	558	408	534	–	–	–

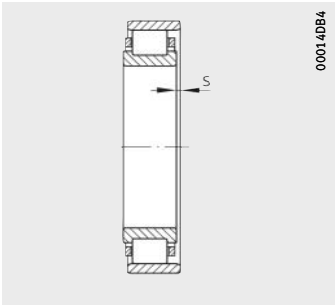

[1] Axial displacement “s” for N and NU

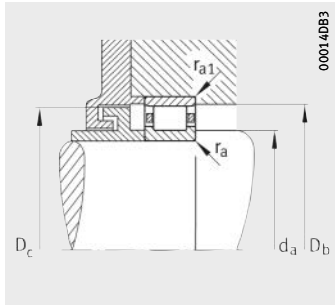

Mounting dimensions for N

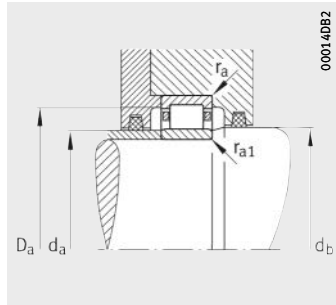

Mounting dimensions for NU

Mounting dimensions								Basic load ratings		Fatigue limit load	Limiting speed	Reference speed
d_a		d_b	D_a	D_b	D_c	r_a	r_{a1}	dyn. C_r	stat. C_{0r}	C_{ur}	n_G	n_B
min.	max.	min.	max.	min.	max.	max.	max.	kN	kN	kN	min^{-1}	min^{-1}
329	–	–	391	385	377	2	2	212	360	27	2 800	–
330	338	344	390	–	–	2	1,5	345	695	58	2 800	–
330	338	344	390	–	–	2	1,5	630	1 500	151	2 800	1 000
332	346	354	428	–	–	2,5	2,5	620	1 100	91	2 600	–
332	346	354	428	–	–	2,5	2,5	915	1 800	181	2 400	1 100
332	346	354	428	–	–	2,5	2,5	1 220	2 550	255	2 400	900
335	–	–	465	443	437	3	3	915	1 500	144	2 400	1 300
335	356	365	465	–	–	3	3	915	1 500	124	2 400	1 300
335	356	365	465	–	–	3	3	915	1 500	124	2 400	1 300
335	356	365	465	–	–	3	3	915	1 500	124	2 400	1 300
335	356	365	465	–	–	3	3	915	1 500	108	2 400	1 300
335	356	364	465	–	–	3	3	1 760	3 450	345	2 200	850
340	364	372	520	–	–	4	4	3 250	5 600	550	1 900	700
340	388,5	395,5	560	–	–	4	4	1 800	2 700	204	1 900	830
340	388,5	395,5	560	–	–	4	4	1 800	2 700	204	1 900	830
340	380	386	560	–	–	4	4	2 080	3 000	280	1 900	850
340	376,5	383,5	560	–	–	4	4	3 150	4 900	460	1 600	570
340	376,5	383,5	560	–	–	4	4	3 150	4 900	460	1 600	560
352	416	424	638	–	–	6	6	2 550	3 750	265	1 600	650
352	398	405	638	–	–	6	6	4 550	6 800	620	1 400	480
350	–	–	410	405	398	2,1	2,1	212	360	26,5	2 800	–
350	358	365	410	–	–	2,1	1,5	360	735	61	2 800	–
350	358	365	410	–	–	2	1,5	640	1 560	156	2 600	950
352	366	374	448	–	–	2,5	2,5	640	1 160	96	2 600	–
352	366	374	448	–	–	2,5	2,5	950	1 930	190	2 400	950
352	366	374	448	–	–	2,5	2,5	1 250	2 600	260	2 400	850
357	381	390	503	–	–	4	4	1 080	1 760	141	2 200	1 200
357	–	–	503	478,5	471,5	4	4	1 120	1 830	169	2 200	1 200
357	381	390	503	–	–	4	4	1 120	1 830	147	2 200	1 190
357	381	390	503	–	–	4	4	1 120	1 830	147	2 200	1 190
357	381	390	503	–	–	4	4	1 120	1 830	147	2 200	1 190
360	395	403	560	–	–	4	4	3 200	5 600	540	1 800	700
366	415	423	594	–	–	5	5	1 930	3 000	225	1 800	750
366	404	412	594	–	–	5	5	2 360	3 450	315	1 800	800
366	404	412	594	–	–	5	5	3 450	5 700	540	1 500	520

Cylindrical roller bearings with cage

Single row
Non-locating bearings

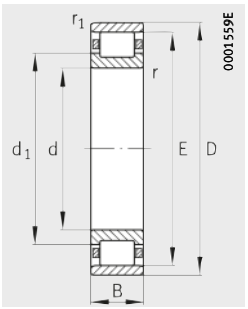

Design 1
N

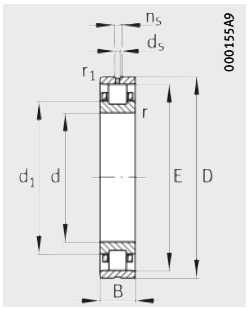

Design 2
N with lubrication groove and holes

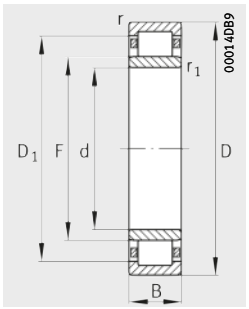

Design 3
NU

Dimension table (continued) · Dimensions in mm

Designation	Design	Mass	Dimensions											
		m	d	D	B	r	r_1	$s^{1)}$	E	F	D_1	d_1	d_s	n_s
		≈kg				min.	min.				≈	≈		
NU2268-E-M1A	3	233	**340**	620	165	6	6	13,3	558	408	534	–	–	–
NU368-E-M1	3	247	**340**	710	118	7,5	7,5	9,7	614,4	450,4	588	–	–	–
NU2368-E-M1	3	419	**340**	710	212	7,5	7,5	15,5	635	425	601,4	–	–	–
Z-527456.ZL	2	11,2	**360**	440	38	2,1	2,1	7	421,5	–	–	389,4	3,2	9,5
NU1872-M1	3	12	**360**	440	38	2,1	1,5	4,3	421,5	381,5	414,7	–	–	–
NU3872-M1	3	19,4	**360**	440	60	2,1	1,5	6	421,5	381,5	414,7	–	–	–
NU1972-M1	3	27,7	**360**	480	56	3	3	6,2	450	390	438,5	–	–	–
NU2972-M1	3	37,2	**360**	480	72	3	3	4	450	390	440	–	–	–
NU3972-E-M1	3	45,6	**360**	480	90	3	3	4,7	454	390	443,3	–	–	–
N1072-M1	1	65,3	**360**	540	82	5	5	8,9	495	–	–	421,6	–	–
NU1072-M1	3	65,9	**360**	540	82	5	5	8,9	495	405	478,1	–	–	–
NU1072-M1-C3	3	65,9	**360**	540	82	5	5	8,9	495	405	478,1	–	–	–
NU1072-M1A	3	65,9	**360**	540	82	5	5	8,9	495	405	478,1	–	–	–
NU1072-MP1A	3	64,2	**360**	540	82	5	5	8,9	495	405	478,1	–	–	–
NU1072-MPA	3	64,2	**360**	540	82	5	5	8,9	495	405	478,1	–	–	–
NU3072-M1	3	112	**360**	540	134	5	5	11,5	495	405	478,1	–	–	–
NU3172-M1	3	220	**360**	600	192	5	5	19	548	420	527	–	–	–
NU272-E-M1	3	149	**360**	650	95	6	6	9,5	579	451	558,5	–	–	–
NU272-E-M1A	3	151	**360**	650	95	6	6	9,5	579	451	558,5	–	–	–
NU1272-M1	3	187	**360**	650	122	6	6	8,2	589	429	563,5	–	–	–
NU2272-E-M1	3	254	**360**	650	170	6	6	15	588	428	562	–	–	–
NU2272-E-M1A	3	258	**360**	650	170	6	6	15	588	428	562	–	–	–
NU2372-E-M1	3	498	**360**	750	224	7,5	7,5	19	665	445	630	–	–	–
NU2372-E-M1A	3	498	**360**	750	224	7,5	7,5	19	665	445	630	–	–	–
Z-526718.ZL	2	18,8	**380**	480	46	2,1	2,1	8,5	455,5	–	–	415,5	3,2	9,5
N1876-M1	1	19,1	**380**	480	46	2,1	2,1	5,3	455,5	–	–	415,5	–	–
NU1876-M1	3	19,2	**380**	480	46	2,1	2,1	5,3	455,5	407,5	447,4	–	–	–
N2876-M1	1	25,3	**380**	480	60	2,1	2,1	6,9	455,5	–	–	415,5	–	–
NU2876-M1	3	25,4	**380**	480	60	2,1	2,1	6,9	455,5	407,5	447,4	–	–	–
NU3876-M1	3	32,5	**380**	480	75	2,1	2,1	7,8	455,5	407,5	447,4	–	–	–
NU1976-M1	3	40,7	**380**	520	65	4	4	6	484	416	472,7	–	–	–
N2976-M1	3	52,5	**380**	520	82	4	4	7,2	486	–	–	425,9	–	–
NU2976-M1	3	52,9	**380**	520	82	4	4	7,2	486	414	471,6	–	–	–
NU2976-MP1A	3	52,3	**380**	520	82	4	4	7,2	486	414	471,6	–	–	–
NU3976-E-M1	3	67	**380**	520	106	4	4	8,7	490	414	474,8	–	–	–

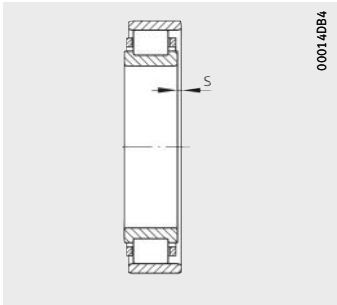

1) Axial displacement “s” for N and NU

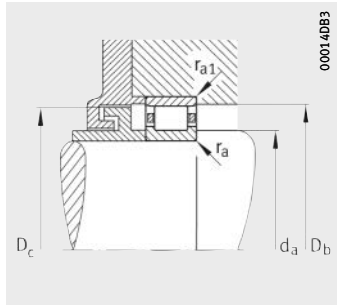

Mounting dimensions for N

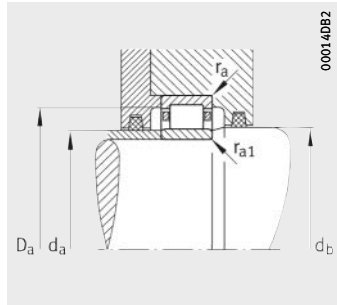

Mounting dimensions for NU

Mounting dimensions								Basic load ratings		Fatigue limit load	Limiting speed	Reference speed
d_a		d_b	D_a	D_b	D_c	r_a	r_{a1}	dyn. C_r	stat. C_{0r}	C_{ur}	n_G	n_B
min.	max.	min.	max.	min.	max.	max.	max.	kN	kN	kN	min^{-1}	min^{-1}
366	404	412	594	–	–	5	5	3 450	5 700	540	1 500	520
372	447	454	678	–	–	6	6	2 750	4 150	290	1 500	600
372	421,5	428,5	678	–	–	6	6	5 000	7 350	660	1 400	450
370	–	–	430	425	418	2,1	2,1	220	390	28	2 600	–
370	378	385	430	–	–	2	1,5	365	765	62	2 600	–
370	378	385	430	–	–	2	1,5	670	1 660	163	2 400	900
372	386	394	468	–	–	2,5	2,5	655	1 220	100	2 400	–
372	386	394	468	–	–	2,5	2,5	980	2 040	199	2 200	900
372	386	394	468	–	–	2,5	2,5	1 290	2 800	275	2 200	800
378	–	–	523	499	491	4	4	1 140	1 900	175	2 400	1 300
377	400	410	523	–	–	4	4	1 140	1 900	151	2 200	1 110
377	400	410	523	–	–	4	4	1 140	1 900	151	2 200	1 110
377	400	410	523	–	–	4	4	1 140	1 900	151	2 200	1 110
377	400	410	523	–	–	4	4	1 140	1 900	133	2 200	1 110
377	400	410	523	–	–	4	4	1 140	1 900	133	2 200	1 110
377	400	410	523	–	–	4	4	2 200	4 400	420	2 000	670
380	416	424	580	–	–	4	4	3 350	6 000	570	1 600	630
386	447	455	624	–	–	5	5	2 000	3 150	234	1 600	700
386	447	455	624	–	–	5	5	2 000	3 150	234	1 600	700
386	425	433	624	–	–	5	5	2 700	4 000	345	1 600	700
386	424	432	624	–	–	5	5	3 600	5 700	520	1 400	510
386	424	432	624	–	–	5	5	3 600	5 700	520	1 400	510
392	441	449	718	–	–	6	6	5 500	8 300	730	1 300	400
392	441	449	718	–	–	6	6	5 500	8 300	730	1 300	400
390	–	–	470	460	451	2,1	2,1	285	480	34,5	2 400	–
390	–	–	470	460	451	2	2	490	1 000	91	2 400	–
390	404	411	470	–	–	2	2	490	1 000	81	2 400	–
390	–	–	470	460	451	2	2	695	1 560	148	2 200	900
390	404	411	470	–	–	2	2	695	1 560	148	2 200	900
390	404	411	470	–	–	2	2	900	2 160	208	2 200	800
395	412	420	505	–	–	3	3	815	1 500	124	2 200	–
395	–	–	505	490	482	3	3	1 320	2 700	255	2 000	800
395	410	418	505	–	–	3	3	1 320	2 700	260	2 000	800
395	410	418	505	–	–	3	3	1 320	2 700	260	2 000	800
395	410	418	505	–	–	3	3	1 700	3 550	340	2 000	700

Cylindrical roller bearings with cage

Single row
Non-locating bearings

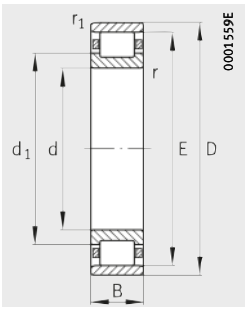

Design 1
N

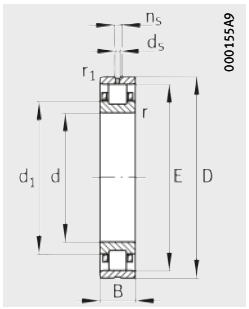

Design 2
N with lubrication groove and holes

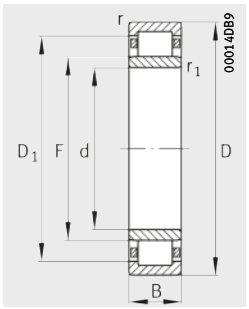

Design 3
NU, cylindrical or tapered bore

Dimension table (continued) · Dimensions in mm

Designation	Design	Mass	Dimensions											
		m	d	D	B	r	r_1	$s^{1)}$	E	F	D_1	d_1	d_s	n_s
		≈kg				min.	min.				≈	≈		
N1076-M1	1	67,2	**380**	560	82	5	5	9	515	–	–	441,6	–	–
N1076-M1B	1	67,6	**380**	560	82	5	5	9	515	–	–	441,6	–	–
NU1076-M1	3	69,1	**380**	560	82	5	5	9	515	425	498,1	–	–	–
NU1076-M1-C3	3	69,1	**380**	560	82	5	5	9	515	425	498,1	–	–	–
NU1076-M1A	3	69,1	**380**	560	82	5	5	9	515	425	498,1	–	–	–
NU3076-M1	3	117	**380**	560	135	5	5	12,5	515	425	498,1	–	–	–
NU3176-M1	3	231	**380**	620	194	5	5	19,5	568	440	547	–	–	–
NU276-E-M1	3	162	**380**	680	95	6	6	8	622	494	601	–	–	–
NU1276-M1	3	211	**380**	680	132	6	6	9,5	619	449	592	–	–	–
NU2276-E-M1	3	288	**380**	680	175	6	6	13,8	615	451	588,8	–	–	–
NU2276-E-M1A	3	293	**380**	680	175	6	6	13,8	615	451	588,8	–	–	–
Z-527457.ZL	2	19,4	**400**	500	46	2,1	2,1	8	476	–	–	437,4	3,2	9,5
NU1880-M1	3	20,3	**400**	500	46	2,1	2,1	5,3	476	428	468	–	–	–
NU3880-M1	3	34	**400**	500	75	2,1	2,1	7,8	476	428	468	–	–	–
NU1980-M1	3	41,9	**400**	540	65	4	4	7,2	504	436	492,7	–	–	–
NU2980-M1	3	55,3	**400**	540	82	4	4	7,2	506	434	494	–	–	–
NU3980-E-M1	3	70,3	**400**	540	106	4	4	8,7	510	434	497,5	–	–	–
N1080-M1	1	87,9	**400**	600	90	5	5	9,5	550	–	–	469	–	–
NU1080-K-M1	3	88,5	**400**	600	90	5	–	9,5	550	450	531,5	–	–	–
NU1080-M1	3	90,1	**400**	600	90	5	5	9,5	550	450	531,5	–	–	–
NU1080-M1-C3	3	90,1	**400**	600	90	5	5	9,5	550	450	531,5	–	–	–
NU1080-M1A	3	90,6	**400**	600	90	5	5	9,5	550	450	531,5	–	–	–
NU3080-M1	3	153	**400**	600	148	5	5	12,8	550	450	531,5	–	–	–
NU3180-M1	3	260	**400**	650	200	6	6	18	600	460	577,5	–	–	–
NU1280-M1	3	258	**400**	720	140	6	6	9,8	654	474	625	–	–	–
NU2280-E-M1	3	342	**400**	720	185	6	6	15,4	661	471	630,5	–	–	–
NU2280-E-M1A	3	346	**400**	720	185	6	6	15,4	661	471	630,5	–	–	–
Z-547075.01.ZL	1	32,2	**406**	502	76	4	2,5	–	482,7	–	–	437,6	–	–
Z-547459.ZL	1	33,7	**406**	502	76	4	4	–	482,7	–	–	437,6	–	–
Z-527458.ZL	2	21	**420**	520	46	2,1	2,1	8,5	496	–	–	457,5	3,2	12,2
NU1884-M1	3	20,9	**420**	520	46	2,1	2,1	5,3	496	448	488	–	–	–
NU3884-M1	3	35,5	**420**	520	75	2,1	2,1	7,8	496	448	488	–	–	–
NU1984-M1	3	44,2	**420**	560	65	4	4	7,2	524	456	510,4	–	–	–

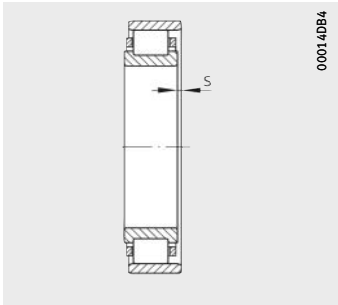

1) Axial displacement “s” for N and NU

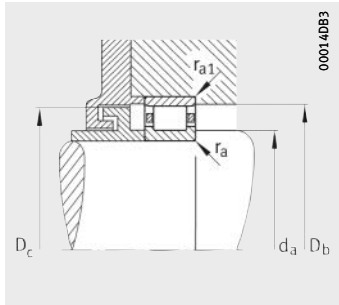

Mounting dimensions for N

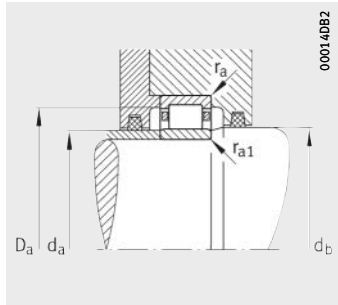

Mounting dimensions for NU

Mounting dimensions								Basic load ratings		Fatigue limit load	Limiting speed	Reference speed
d_a		d_b	D_a	D_b	D_c	r_a	r_{a1}	dyn. C_r	stat. C_{0r}	C_{ur}	n_G	n_B
min.	max.	min.	max.	min.	max.	max.	max.	kN	kN	kN	min^{-1}	min^{-1}
398	–	–	543	519	511	4	4	1 180	2 000	180	2 400	1 250
398	–	–	543	519	511	4	4	1 180	2 000	180	2 400	1 250
397	420	430	543	–	–	4	4	1 180	2 000	156	2 000	1 050
397	420	430	543	–	–	4	4	1 180	2 000	156	2 000	1 050
397	420	430	543	–	–	4	4	1 180	2 000	156	2 000	1 050
397	420	430	543	–	–	4	4	2 240	4 550	435	1 900	670
400	436	444	600	–	–	4	4	3 450	6 300	600	1 600	600
406	556	564	654	–	–	5	5	2 120	3 450	255	1 500	610
406	445	453	654	–	–	5	5	2 850	4 150	370	1 500	700
406	446	456	654	–	–	5	5	4 050	6 700	610	1 400	450
406	446	456	654	–	–	5	5	4 050	6 700	610	1 400	450
410	–	–	490	480	472	2,1	2,1	300	530	37	2 400	–
410	424	431	490	–	–	2,1	2,1	520	1 100	88	2 400	–
410	424	431	490	–	–	2	2	930	2 280	219	2 200	750
415	432	440	525	–	–	3	3	800	1 500	123	2 200	–
415	430	438	525	–	–	3	3	1 340	2 750	265	2 000	750
415	430	438	525	–	–	3	3	1 760	3 750	360	1 900	670
417	–	–	583	554	546	4	4	1 370	2 320	212	1 900	950
417	445	455	583	–	–	4	–	1 370	2 320	177	1 900	980
417	445	455	583	–	–	4	4	1 370	2 320	177	1 900	980
417	445	455	583	–	–	4	4	1 370	2 320	177	1 900	980
417	445	455	583	–	–	4	4	1 370	2 320	177	1 900	980
417	445	455	583	–	–	4	4	2 650	5 400	510	1 800	600
426	456	464	624	–	–	5	5	4 050	7 500	690	1 400	530
426	470	478	694	–	–	5	5	3 050	4 400	385	1 400	670
426	467	475	694	–	–	5	5	5 600	7 600	670	1 300	850
426	467	475	694	–	–	5	5	5 600	7 600	670	1 300	410
421	–	–	490	486	478	3	2,1	1 160	2 750	231	2 200	670
421	–	–	490	486	478	3	3	1 160	2 750	231	2 200	670
430	–	–	510	500	492	2,1	2,1	315	570	39,5	2 200	–
430	444	451	510	–	–	2	2	530	1 140	90	2 200	–
430	444	451	510	–	–	2	2	950	2 400	226	2 000	700
435	452	460	545	–	–	3	3	830	1 600	129	2 000	–

Cylindrical roller bearings with cage

Single row
Non-locating bearings

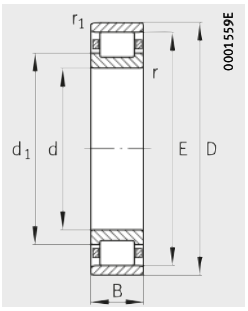

Design 1
N

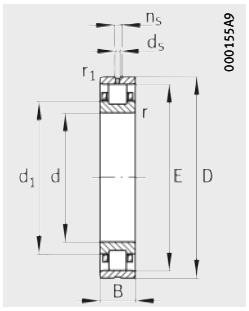

Design 2
N with lubrication groove and holes

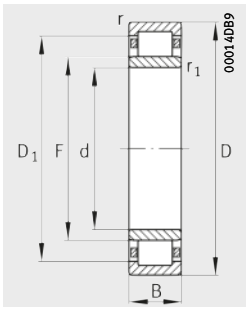

Design 3
NU, cylindrical or tapered bore

Dimension table (continued) · Dimensions in mm

Designation	Design	Mass	Dimensions											
		m	d	D	B	r	r_1	$s^{1)}$	E	F	D_1	d_1	d_s	n_s
		≈kg				min.	min.				≈	≈		
NU2984-M1	3	58,6	**420**	560	82	4	4	6	526	454	511,6	–	–	–
NU3984-E-M1	3	73	**420**	560	106	4	4	5,7	530	454	517,5	–	–	–
N1084-M1	1	92,2	**420**	620	90	5	5	9,6	570	–	–	489	–	–
NU1084-M1	3	92,9	**420**	620	90	5	5	9,6	570	470	551,5	–	–	–
NU1084-M1A	3	94,2	**420**	620	90	5	5	9,6	570	470	551,5	–	–	–
NU3084-M1	3	162	**420**	620	150	5	5	13,5	570	470	551,5	–	–	–
NU3084-M1A	3	162	**420**	620	150	5	5	13,5	570	470	551,5	–	–	–
NU3184-M1	3	352	**420**	700	224	6	6	19	645	485	619,5	–	–	–
NU1284-M1	3	314	**420**	760	150	7,5	7,5	9,8	694	494	662	–	–	–
NU2284-E-M1	3	398	**420**	760	195	7,5	7,5	16,8	690	494	658	–	–	–
NU2284-E-M1A	3	406	**420**	760	195	7,5	7,5	16,8	690	494	658	–	–	–
Z-531636.ZL	2	19	**440**	540	40	2,1	2,1	6,5	514	–	–	478,6	3,2	9,5
Z-527459.ZL	2	22	**440**	540	46	2,1	2,1	8,5	516	–	–	477,4	3,2	12,2
N1888-M1B	1	22,3	**440**	540	46	2,1	2,1	5,3	516	–	–	476	–	–
NU1888-M1	3	22,2	**440**	540	46	2,1	2,1	5,3	516	468	508	–	–	–
NU3888-M1	3	37	**440**	540	75	2,1	2,1	7,8	516	468	508	–	–	–
NU1988-M1	3	60,5	**440**	600	74	4	4	8,9	558	482	545,5	–	–	–
N2988-M1B	1	81	**440**	600	95	4	4	8,7	560	–	–	493,3	–	–
NU2988-M1	3	81	**440**	600	95	4	4	8,7	560	480	545,6	–	–	–
NU3988-E-M1	3	99,2	**440**	600	118	4	4	9,7	564	480	550	–	–	–
N1088-M1	1	107	**440**	650	94	6	6	9,8	597	–	–	513,5	–	–
NU1088-M1	3	107	**440**	650	94	6	6	9,8	597	493	577,6	–	–	–
NU1088-M1A	3	109	**440**	650	94	6	6	9,8	597	493	577,6	–	–	–
NU1088-MPA	3	113	**440**	650	94	6	6	9,8	597	493	577,6	–	–	–
NU3088-K-M1A	3	181	**440**	650	157	6	–	3,2	597	493	577,6	–	–	–
NU3188-M1	3	367	**440**	720	226	6	6	19,1	665	505	640	–	–	–
NU1288-M	3	345	**440**	790	155	7,5	7,5	9,8	724	514	690	–	–	–
NU2288-E-M1	3	438	**440**	790	200	7,5	7,5	17,5	718	518	686	–	–	–
NU2288-E-M1A	3	449	**440**	790	200	7,5	7,5	17,5	718	518	686	–	–	–
Z-527460.ZL	2	32,1	**460**	580	56	3	3	10	550	–	–	505	3,2	12,2
NU1892-M1	3	34,1	**460**	580	56	3	3	6,6	550	494	540,5	–	–	–
NU3892-M1	3	56,4	**460**	580	90	3	3	10	550	494	540,5	–	–	–
NU1992-M1	3	63,1	**460**	620	74	4	4	8,4	578	502	562,8	–	–	–

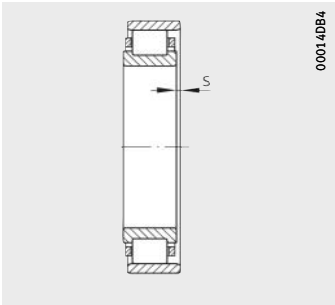

[1] Axial displacement “s” for N and NU

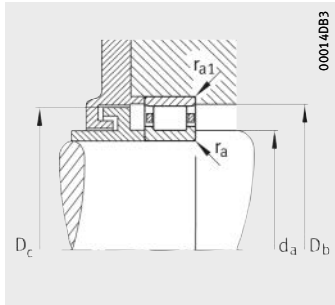

Mounting dimensions for N

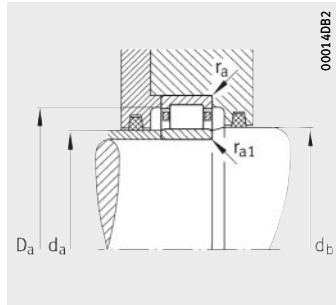

Mounting dimensions for NU

Mounting dimensions								Basic load ratings		Fatigue limit load	Limiting speed	Reference speed
d_a		d_b	D_a	D_b	D_c	r_a	r_{a1}	dyn. C_r	stat. C_{0r}	C_{ur}	n_G	n_B
min.	max.	min.	max.	min.	max.	max.	max.	kN	kN	kN	min^{-1}	min^{-1}
435	450	458	545	–	–	3	3	1 370	2 900	275	1 900	700
435	450	458	545	–	–	3	3	1 760	3 900	370	1 900	630
437	–	–	603	574	566	4	4	1 400	2 450	219	1 800	900
437	465	475	603	–	–	4	4	1 400	2 450	183	1 800	920
437	465	475	603	–	–	4	4	1 400	2 450	183	1 800	920
437	465	475	603	–	–	4	4	2 700	5 600	530	1 600	560
437	465	475	603	–	–	4	4	2 700	5 600	530	1 600	560
446	480	490	674	–	–	5	5	4 900	8 800	790	1 400	480
452	490	498	728	–	–	6	6	3 900	5 700	490	1 400	560
452	489	499	728	–	–	6	6	5 000	8 150	710	1 200	380
452	489	499	728	–	–	6	6	5 000	8 150	710	1 200	380
450	–	–	530	519	509	2,1	2,1	290	550	37	2 200	–
450	–	–	530	521	511	2,1	2,1	335	620	42	2 200	–
450	–	–	530	521	511	2	2	540	1 200	104	2 200	–
450	464	471	530	–	–	2	2	540	1 200	93	2 200	–
450	464	471	530	–	–	2	2	965	2 500	232	2 000	670
455	478	486	585	–	–	3	3	1 000	1 900	149	1 900	–
455	–	–	585	565	555	3	3	1 630	3 450	320	1 800	670
455	476	484	585	–	–	3	3	1 630	3 450	320	1 800	670
455	476	484	585	–	–	3	3	2 120	4 650	430	1 600	560
463	–	–	627	601	593	5	5	1 560	2 750	244	1 600	850
463	488	498	627	–	–	5	5	1 560	2 750	203	1 600	860
463	488	498	627	–	–	5	5	1 560	2 750	203	1 600	860
463	488	498	627	–	–	5	5	1 560	2 750	203	1 600	860
463	488	498	627	–	–	5	–	3 000	6 400	590	1 500	500
466	500	510	694	–	–	5	5	5 100	9 300	830	1 400	450
472	509	519	758	–	–	6	6	4 050	6 000	500	1 300	530
472	514	523	758	–	–	6	6	5 100	8 300	710	1 200	380
472	514	523	758	–	–	6	6	5 100	8 300	710	1 200	380
472	–	–	568	555	545	2,5	2,5	400	710	48	2 000	–
472	490	497	568	–	–	2,5	2,5	670	1 430	109	2 000	–
472	490	497	568	–	–	2,5	2,5	1 200	3 050	280	1 800	630
475	498	506	605	–	–	3	3	1 020	1 960	135	1 800	–

Cylindrical roller bearings with cage

Single row
Non-locating bearings

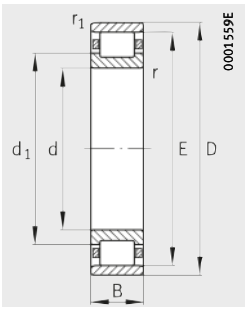

Design 1
N

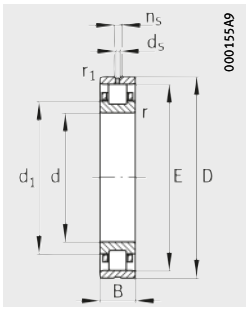

Design 2
N with lubrication groove and holes

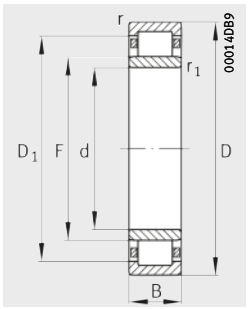

Design 3
NU, cylindrical or tapered bore

Dimension table (continued) · Dimensions in mm

Designation	De-sign	Mass	Dimensions											
		m	d	D	B	r	r_1	$s^{1)}$	E	F	D_1	d_1	d_s	n_s
		≈kg				min.	min.				≈	≈		
NU2992-M1	3	84	**460**	620	95	4	4	8,7	580	500	564	–	–	–
NU3992-E-M1	3	104	**460**	620	118	4	4	6,2	584	500	570	–	–	–
NU1092-K-M1	3	122	**460**	680	100	6	–	11,2	624	516	603,9	–	–	–
NU1092-K-M1A	3	124	**460**	680	100	6	–	11,2	624	516	603,9	–	–	–
NU1092-M1	3	125	**460**	680	100	6	6	11,2	624	516	603,9	–	–	–
NU1092-M1A	3	126	**460**	680	100	6	6	11,2	624	516	603,9	–	–	–
NU3092-K-M1A	3	206	**460**	680	163	6	–	14,4	624	516	603,9	–	–	–
NU3192-M1A	3	436	**460**	760	240	7,5	7,5	20	701	531	674	–	–	–
NU1292-M1	3	401	**460**	830	165	7,5	7,5	14,1	759	539	724	–	–	–
NU2292-E-M1	3	511	**460**	830	212	7,5	7,5	20	756	544	722	–	–	–
NU2292-E-M1A	3	521	**460**	830	212	7,5	7,5	20	756	544	722	–	–	–
NU2292-E-MPA	3	513	**460**	830	212	7,5	7,5	20	756	544	722	–	–	–
Z-527461.ZL	2	34,6	**480**	600	56	3	3	10	570	–	–	525	3,2	12,2
NU1896-M1	3	35,2	**480**	600	56	3	3	6,6	570	514	560,5	–	–	–
NU3896-M1	3	57,8	**480**	600	90	3	3	10	570	514	560,5	–	–	–
NU1996-M1	3	74,2	**480**	650	78	5	5	8,8	605	525	589	–	–	–
NU2996-M1	3	98,8	**480**	650	100	5	5	6,3	607	523	593	–	–	–
NU3996-E-M1	3	125	**480**	650	128	5	5	6,7	613	523	598	–	–	–
N1096-M1	1	128	**480**	700	100	6	6	10,7	644	–	–	556,4	–	–
NU1096-M1	3	129	**480**	700	100	6	6	10,7	644	536	623,9	–	–	–
NU1096-M1A	3	132	**480**	700	100	6	6	10,7	644	536	623,9	–	–	–
NU3096-M1	3	219	**480**	700	165	6	6	15	644	536	623,9	–	–	–
NU3196-M1	3	483	**480**	790	248	7,5	7,5	22	726	556	698,8	–	–	–
NU1296-M1	3	468	**480**	870	170	7,5	7,5	10,5	794	564	757	–	–	–
Z-537024.ZL	2	29,6	**500**	620	45	3	3	7	587	–	–	547	3,2	9,5
Z-527462.ZL	2	35	**500**	620	56	3	3	10	590	–	–	545	3,2	12,2
N18/500-M1	1	36,1	**500**	620	56	3	3	6,6	590	–	–	543,5	–	–
NU18/500-M1	3	36,9	**500**	620	56	3	3	6,6	590	534	580	–	–	–
N28/500-M1	1	48,2	**500**	620	72	3	3	8	590	–	–	543,5	–	–
NU28/500-M1	3	48,5	**500**	620	72	3	3	8	590	534	580	–	–	–
NU28/500-M1A	3	49,1	**500**	620	72	3	3	8	590	534	580	–	–	–
NU38/500-M1	3	60,5	**500**	620	90	3	3	10	590	534	580	–	–	–
NU19/500-M1	3	76,8	**500**	670	78	5	5	8,8	625	545	609	–	–	–

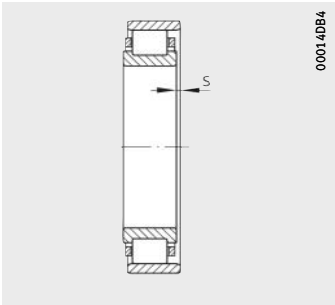

[1] Axial displacement “s” for N and NU

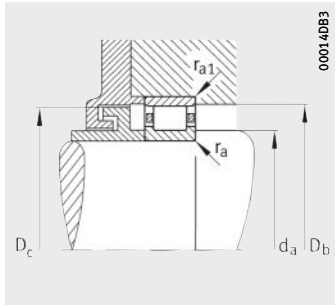

Mounting dimensions for N

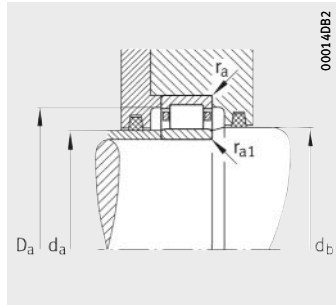

Mounting dimensions for NU

Mounting dimensions								Basic load ratings		Fatigue limit load	Limiting speed	Reference speed
d_a		d_b	D_a	D_b	D_c	r_a	r_{a1}	dyn. C_r	stat. C_{0r}	C_{ur}	n_G	n_B
min.	max.	min.	max.	min.	max.	max.	max.	kN	kN	kN	min^{-1}	min^{-1}
475	496	504	605	–	–	3	3	1 660	3 600	330	1 600	630
475	496	504	605	–	–	3	3	2 160	4 800	440	1 600	530
483	510	522	657	–	–	5	–	1 660	3 000	218	1 600	800
483	510	522	657	–	–	5	–	1 660	3 000	218	1 600	800
483	510	522	657	–	–	5	5	1 660	3 000	218	1 600	830
483	510	522	657	–	–	5	5	1 660	3 000	218	1 600	830
483	511	521	657	–	–	5	–	3 250	6 950	630	1 400	480
492	526	536	728	–	–	6	6	5 600	10 400	920	1 300	430
492	534	544	798	–	–	6	6	4 650	6 950	580	1 200	500
492	540	549	798	–	–	6	6	5 600	9 150	770	1 100	360
492	540	549	798	–	–	6	6	5 600	9 150	770	1 100	355
492	540	549	798	–	–	6	6	5 600	9 150	770	1 100	360
492	–	–	588	575	565	2,5	2,5	415	765	52	1 900	–
492	510	517	588	–	–	2,5	2,5	680	1 460	113	1 900	–
492	510	517	588	–	–	2,5	2,5	1 220	3 100	285	1 800	600
497	521	529	633	–	–	4	4	1 140	2 240	172	1 800	–
497	519	527	633	–	–	4	4	1 900	4 150	380	1 500	560
497	519	527	633	–	–	4	4	2 450	5 500	495	1 500	500
503	–	–	677	648,5	639,5	5	5	1 700	3 100	270	1 500	800
503	530	542	677	–	–	5	5	1 700	3 100	225	1 500	780
503	530	542	677	–	–	5	5	1 700	3 100	225	1 500	780
503	531	541	677	–	–	5	5	3 350	7 200	650	1 400	450
512	551	561	758	–	–	6	6	5 850	11 000	970	1 200	400
512	559	569	838	–	–	6	6	5 100	7 650	630	1 100	450
512	–	–	608	593	581	2,5	2,5	360	695	47	1 900	–
512	–	–	608	596	584	2,5	2,5	440	830	55	1 800	–
512	–	–	608	596	584	2,5	2,5	695	1 530	130	1 800	–
512	530	538	608	–	–	2,5	2,5	695	1 530	116	1 800	–
512	–	–	608	596	584	2,5	2,5	1 020	2 500	222	1 600	630
512	530	538	608	–	–	2,5	2,5	1 020	2 500	222	1 600	630
512	530	538	608	–	–	2,5	2,5	1 020	2 500	222	1 600	630
512	530	538	608	–	–	2,5	2,5	1 250	3 250	290	1 600	560
517	541	549	653	–	–	4	4	1 160	2 320	176	1 600	–

Cylindrical roller bearings with cage

Single row
Non-locating bearings

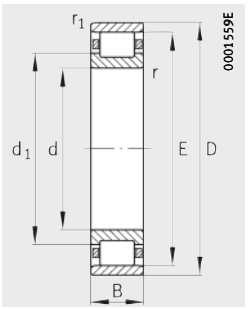

Design 1
N

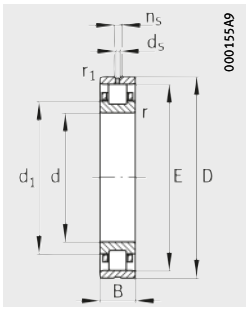

Design 2
N with lubrication groove and holes

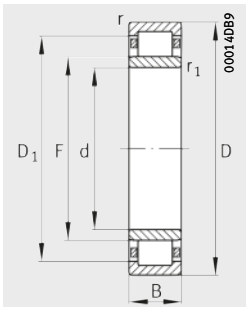

Design 3
NU, cylindrical or tapered bore

Dimension table (continued) · Dimensions in mm

Designation	Design	Mass	Dimensions											
		m	d	D	B	r	r_1	$s^{1)}$	E	F	D_1	d_1	d_s	n_s
		≈kg				min.	min.				≈	≈		
NU29/500-M1	3	103	**500**	670	100	5	5	6,3	627	543	613	–	–	–
NU39/500-E-M1	3	128	**500**	670	128	5	5	11	633	543	618	–	–	–
N10/500-M1	1	132	**500**	720	100	6	6	10,7	664	–	–	576,4	–	–
NU10/500-M1	3	133	**500**	720	100	6	6	10,7	664	556	643,9	–	–	–
NU10/500-M1A	3	135	**500**	720	100	6	6	10,7	664	556	643,9	–	–	–
NU20/500-E-M1	3	177	**500**	720	128	6	6	7	673	553	655,5	–	–	–
NU30/500-M1	3	230	**500**	720	167	6	6	10,8	664	556	643,9	–	–	–
NU31/500-M1	3	575	**500**	830	264	7,5	7,5	23,5	761	581	732	–	–	–
NU12/500-M1	3	568	**500**	920	185	7,5	7,5	16	839	589	799	–	–	–
NU12/500-M1A	3	568	**500**	920	185	7,5	7,5	16	839	589	799	–	–	–
NU22/500-E-M1	3	728	**500**	920	243	7,5	7,5	17	824	604	789	–	–	–
Z-527247.ZL	2	31	**530**	650	45	3	3	3,2	620	–	–	575	3,2	9,5
Z-527272.ZL	2	36,6	**530**	650	56	3	3	10	620	–	–	573,5	3,2	12,2
NU18/530-M1	3	38,5	**530**	650	56	3	3	6,6	620	564	610,5	–	–	–
NU28/530-M1	3	50,7	**530**	650	72	3	3	8	620	564	610,5	–	–	–
NU38/530-M1	3	64,1	**530**	650	90	3	3	10	620	564	610,5	–	–	–
NU19/530-M1	3	89,9	**530**	710	82	5	5	9,3	662	578	645,2	–	–	–
NU29/530-M1	3	123	**530**	710	106	5	5	8,5	665	575	647	–	–	–
NU10/530-M1	3	190	**530**	780	112	6	6	10,2	719	591	696	–	–	–
NU10/530-M1A	3	193	**530**	780	112	6	6	10,2	719	591	696	–	–	–
NU20/530-E-M1	3	250	**530**	780	145	6	6	8	724	594	703,1	–	–	–
NU30/530-K-M1A	3	311	**530**	780	185	6	–	16,8	719	591	696	–	–	–
NU30/530-M1A	3	315	**530**	780	185	6	6	15,5	719	591	696	–	–	–
NU31/530-M1	3	665	**530**	870	272	7,5	7,5	22	801	611	770,6	–	–	–
NU12/530-M1	3	702	**530**	980	200	9,5	9,5	11,7	894	624	851	–	–	–
Z-540208.ZL	2	33	**560**	680	45	3	3	7	647	–	–	606,8	3,2	9,5
Z-526722.ZL	2	40,5	**560**	680	56	3	3	10	650	–	–	605	3,2	9,5
NU18/560-M1	3	40,5	**560**	680	56	3	3	6,6	650	594	640	–	–	–
NU38/560-M1	3	67,3	**560**	680	90	3	3	10	650	594	640	–	–	–
NU19/560-M1	3	105	**560**	750	85	5	5	9,6	700	610	682	–	–	–
NU29/560-M1	3	143	**560**	750	112	5	5	6,5	703	607	687,5	–	–	–
NU10/560-K-M1	3	209	**560**	820	115	6	–	9,8	754	626	731	–	–	–
NU10/560-M1	3	213	**560**	820	115	6	6	9,8	754	626	731	–	–	–

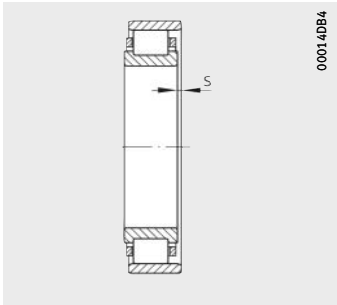

[1] Axial displacement “s” for N and NU

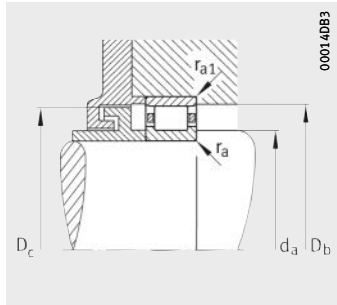

Mounting dimensions for N

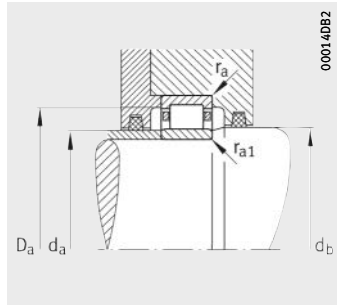

Mounting dimensions for NU

Mounting dimensions								Basic load ratings		Fatigue limit load	Limiting speed	Reference speed
d_a		d_b	D_a	D_b	D_c	r_a	r_{a1}	dyn. C_r	stat. C_{0r}	C_{ur}	n_G	n_B
min.	max.	min.	max.	min.	max.	max.	max.	kN	kN	kN	min^{-1}	min^{-1}
517	539	547	653	–	–	4	4	1 930	4 300	385	1 500	560
517	539	547	653	–	–	4	4	2 500	5 700	510	1 400	480
523	–	–	697	669	659	5	5	1 760	3 200	275	1 500	750
523	550	562	697	–	–	5	5	1 760	3 200	232	1 500	750
523	550	562	697	–	–	5	5	1 760	3 200	232	1 500	750
523	548	558	697	–	–	5	5	3 000	6 000	530	1 400	480
523	551	561	697	–	–	5	5	3 400	7 500	670	1 400	430
532	576	586	798	–	–	6	6	6 550	12 500	1 070	1 100	360
532	584	594	888	–	–	6	6	5 700	8 500	680	1 100	430
532	584	594	888	–	–	6	6	5 700	8 500	680	1 100	430
532	600	608	888	–	–	6	6	7 100	12 500	1 030	1 000	290
542	–	–	638	626	614	2,5	2,5	455	880	58	1 800	–
542	–	–	638	626	614	2,5	2,5	455	880	58	1 800	–
542	560	568	638	–	–	2,5	2,5	720	1 660	123	1 800	–
542	560	568	638	–	–	2,5	2,5	1 060	2 700	236	1 500	600
542	560	568	638	–	–	2,5	2,5	1 290	3 450	310	1 500	530
547	574	582	693	–	–	4	4	1 290	2 650	197	1 500	–
547	571	579	693	–	–	4	4	2 200	4 900	425	1 400	500
553	585	597	757	–	–	5	5	2 500	4 550	320	1 300	640
553	585	597	757	–	–	5	5	2 500	4 550	320	1 300	640
553	589	599	757	–	–	5	5	3 550	7 200	610	1 300	450
553	586	596	757	–	–	5	–	4 300	9 150	810	1 300	380
553	586	596	757	–	–	5	5	4 300	9 150	810	1 300	380
562	605	616	838	–	–	6	6	7 200	14 000	1 180	1 100	320
570	619	629	940	–	–	8	8	6 300	9 300	730	1 000	400
572	–	–	668	653	641	2,5	2,5	375	750	48,5	1 600	–
572	–	–	668	656	644	2,5	2,5	475	950	61	1 600	–
572	590	598	668	–	–	2,5	2,5	735	1 700	124	1 600	–
572	590	598	668	–	–	2,5	2,5	1 290	3 550	310	1 500	500
577	606	614	733	–	–	4	4	1 460	3 000	215	1 400	–
577	603	611	733	–	–	4	4	2 450	5 500	475	1 400	450
583	620	632	797	–	–	5	–	2 700	5 100	355	1 200	590
583	620	632	797	–	–	5	5	2 700	5 100	355	1 200	590

Cylindrical roller bearings with cage

Single row
Non-locating bearings

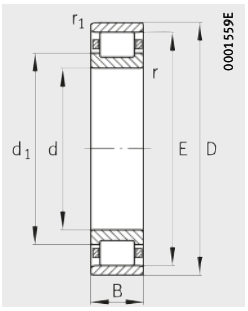

Design 1
N

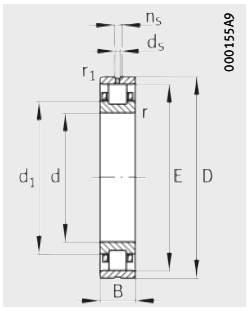

Design 2
N with lubrication groove and holes

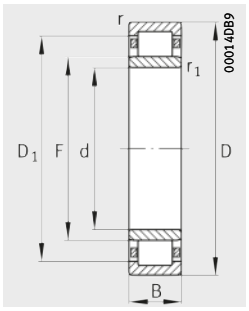

Design 3
NU

Dimension table (continued) · Dimensions in mm

Designation	Design	Mass	Dimensions											
		m	d	D	B	r	r_1	$s^{1)}$	E	F	D_1	d_1	d_s	n_s
		≈kg				min.	min.				≈	≈		
NU10/560-M1A	3	222	**560**	820	115	6	6	9,8	754	626	731	–	–	–
NU20/560-E-M1	3	281	**560**	820	150	6	6	12	762	626	741	–	–	–
NU30/560-M1	3	362	**560**	820	195	6	6	16,8	754	626	731	–	–	–
NU31/560-M1	3	756	**560**	920	280	7,5	7,5	22,5	846	646	814	–	–	–
NU12/560-M1	3	778	**560**	1 030	206	9,5	9,5	11,9	939	659	894	–	–	–
NU12/560-M1A	3	778	**560**	1 030	206	9,5	9,5	11,9	939	659	894	–	–	–
NU22/560-E-M	3	1 040	**560**	1 030	272	9,5	9,5	21,9	939	659	894	–	–	–
NU22/560-E-M1A	3	1 070	**560**	1 030	272	9,5	9,5	21,9	939	659	894	–	–	–
Z-503867.ZL	3	64,6	**585**	750	60	3	3	–	693	637	682,4	–	–	–
Z-527273.ZL	2	52,3	**600**	730	60	3	3	12,2	697	–	–	658,4	3,2	12,2
N18/600-M1	1	50,4	**600**	730	60	3	3	7	697	–	–	647	–	–
NU18/600-M1	3	50,6	**600**	730	60	3	3	7	697	637	687	–	–	–
NU28/600-M1	3	67,4	**600**	730	78	3	3	9,5	697	637	687	–	–	–
NU38/600-M1	3	85,1	**600**	730	98	3	3	11	697	637	687	–	–	–
NU19/600-M1	3	125	**600**	800	90	5	5	9,9	748	652	730,7	–	–	–
NU29/600-E-M1	3	172	**600**	800	118	5	5	8,4	757	649	739	–	–	–
NU29/600-E-M1A	3	172	**600**	800	118	5	5	8,4	757	649	739	–	–	–
NU29/600-E-MP1A	3	169	**600**	800	118	5	5	8,4	757	649	739	–	–	–
N10/600-M1	1	240	**600**	870	118	6	6	10,6	803	–	–	693,5	–	–
N10/600-M1B	1	241	**600**	870	118	6	6	10,6	803	–	–	693,5	–	–
NU10/600-M1	3	241	**600**	870	118	6	6	10,6	803	667	776	–	–	–
NU10/600-M1A	3	243	**600**	870	118	6	6	10,6	803	667	776	–	–	–
NU30/600-MP1A	3	400	**600**	870	200	6	6	16	803	667	776	–	–	–
NU31/600-M1	3	898	**600**	980	300	7,5	7,5	25,5	902	692	868,5	–	–	–
NU12/600-M1	3	918	**600**	1 090	212	9,5	9,5	12	994	704	947,5	–	–	–
Z-547406.ZL	1	116	**622**	775	108	5	5	–	743,5	–	–	670,5	–	–
Z-537025.ZL	2	58,1	**630**	780	56	4	4	9	737	–	–	688,5	3,2	12,2
Z-527274.ZL	2	68,6	**630**	780	69	4	4	12,5	744	–	–	686	3,2	12,2
NU18/630-M1	3	71,8	**630**	780	69	4	4	8,4	744	672	732	–	–	–
N28/630-M1	1	94,5	**630**	780	88	4	4	8,7	744	–	–	684	–	–
NU28/630-M1	3	94,8	**630**	780	88	4	4	8,7	744	672	732	–	–	–
NU28/630-M1A	3	96,5	**630**	780	88	4	4	8,7	744	672	732	–	–	–
NU38/630-M1	3	118	**630**	780	112	4	4	11,2	744	672	732	–	–	–
NU19/630-M1	3	163	**630**	850	100	6	6	8,5	792	688	771	–	–	–
NU29/630-E-M1	3	211	**630**	850	128	6	6	10,3	803	683	784	–	–	–

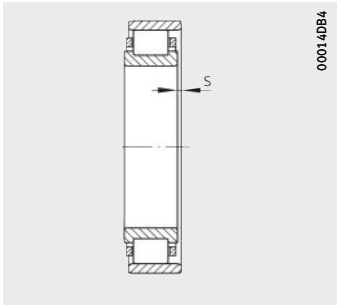

[1] Axial displacement “s” for N and NU

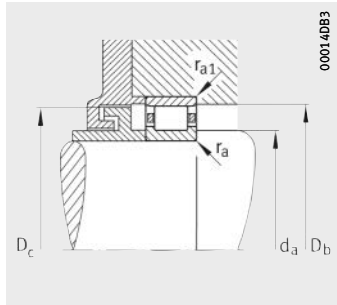

Mounting dimensions for N

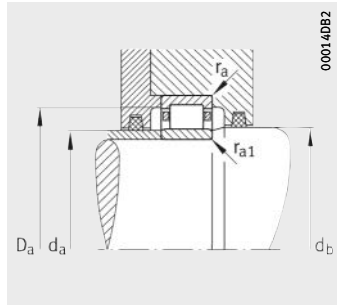

Mounting dimensions for NU

Mounting dimensions								Basic load ratings		Fatigue limit load	Limiting speed	Reference speed
d_a		d_b	D_a	D_b	D_c	r_a	r_{a1}	dyn. C_r	stat. C_{0r}	C_{ur}	n_G	n_B
min.	max.	min.	max.	min.	max.	max.	max.	kN	kN	kN	min^{-1}	min^{-1}
583	620	632	797	–	–	5	5	2 700	5 100	355	1 200	590
583	620,5	631,5	797	–	–	5	5	3 900	7 800	660	1 200	400
583	621	631	797	–	–	5	5	4 500	10 000	860	1 200	360
592	641	646	888	–	–	6	6	8 000	15 300	1 280	1 000	300
600	654	664	990	–	–	8	8	7 100	10 800	830	950	360
600	654	664	990	–	–	8	8	7 100	10 800	830	950	360
600	654	664	990	–	–	8	8	9 500	15 600	1 240	850	240
600	654	664	990	–	–	8	8	9 500	15 600	1 240	850	240
597	632	642	738	–	–	2,5	2,5	750	1 800	135	1 500	530
612	–	–	718	703	691	2,5	2,5	405	900	55	1 500	670
612	–	–	718	703	691	2,5	2,5	850	2 000	162	1 500	–
612	632	642	718	–	–	2,5	2,5	850	2 000	144	1 500	–
612	632	642	718	–	–	2,5	2,5	1 250	3 350	280	1 400	500
612	632	642	718	–	–	2,5	2,5	1 530	4 250	365	1 400	450
617	647	657	783	–	–	4	4	1 700	3 450	249	1 400	–
617	645	655	783	–	–	4	4	3 000	6 700	570	1 200	400
617	645	655	783	–	–	4	4	3 000	6 700	570	1 200	400
617	645	655	783	–	–	4	4	3 000	6 700	570	1 200	400
623	–	–	847	809	797	5	5	2 850	5 400	440	1 100	530
623	–	–	847	809	797	5	5	2 850	5 400	440	1 100	530
623	661	673	847	–	–	5	5	2 850	5 400	365	1 100	550
623	661	673	847	–	–	5	5	2 850	5 400	365	1 100	550
623	642	672	847	–	–	5	5	4 900	11 000	920	1 100	320
632	687	697	948	–	–	6	6	8 650	17 000	1 390	950	280
640	704	714	1 050	–	–	8	8	7 800	12 500	940	900	320
637	–	–	760	750	738	4	4	2 400	5 700	425	1 300	380
645	–	–	765	743	730	3	3	530	1 100	68	1 400	–
645	–	–	765	750	738	3	3	655	1 250	80	1 400	–
645	667	677	765	–	–	3	3	1 140	2 600	189	1 400	–
645	–	–	765	751	737	3	3	1 700	4 400	370	1 300	430
645	667	677	765	–	–	3	3	1 700	4 400	370	1 300	430
645	667	677	765	–	–	3	3	1 700	4 400	370	1 300	430
645	667	677	765	–	–	3	3	2 040	5 500	470	1 300	400
653	683	693	827	–	–	5	5	1 900	3 900	280	1 300	–
653	678	688	827	–	–	5	5	3 350	7 350	505	1 100	360

Cylindrical roller bearings with cage

Single row
Non-locating bearings

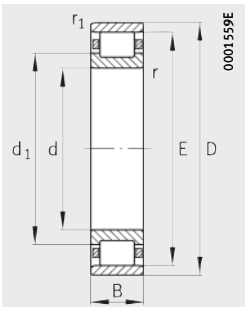

Design 1
N

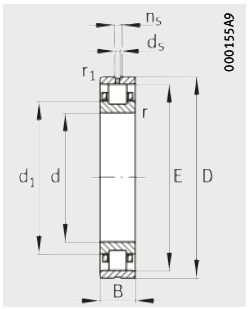

Design 2
N with lubrication groove and holes

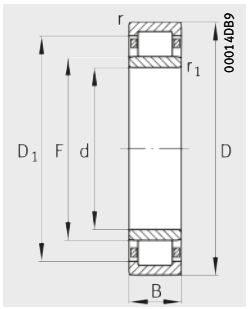

Design 3
NU

Dimension table (continued) · Dimensions in mm

Designation	De-sign	Mass	Dimensions											
		m	d	D	B	r	r_1	$s^{1)}$	E	F	D_1	d_1	d_s	n_s
		≈kg				min.	min.				≈	≈		
N10/630-M1	1	292	**630**	920	128	7,5	7,5	11,7	850	–	–	728	–	–
NU30/630-M1	3	486	**630**	920	212	7,5	7,5	17,4	850	700	826,2	–	–	–
NU31/630-M	3	1 050	**630**	1 030	315	7,5	7,5	27,3	947	727	911,8	–	–	–
NU12/630-M1	3	1 100	**630**	1 150	230	15	15	20	1 020	760	978	–	–	–
Z-527249.ZL	2	60,1	**640**	790	56	4	4	8,5	750	–	–	698,3	3,2	12,2
Z-537238.ZL	2	60,7	**670**	820	56	4	4	9	778	–	–	729,5	6,3	12,2
Z-527463.ZL	2	70,3	**670**	820	69	4	4	12,5	784	–	–	725,9	3,2	12,2
NU18/670-M1	3	75,9	**670**	820	69	4	4	7,8	784	712	772	–	–	–
N28/670-M1	1	100	**670**	820	88	4	4	8,7	784	–	–	724	–	–
NU28/670-M1	3	100	**670**	820	88	4	4	8,7	784	712	772	–	–	–
NU28/670-M1A	3	101	**670**	820	88	4	4	8,7	784	712	772	–	–	–
NU38/670-M1	3	123	**670**	820	112	4	4	11,2	784	712	772	–	–	–
NU19/670-M1	3	186	**670**	900	103	6	6	11,3	839	731	817	–	–	–
NU29/670-M1	3	257	**670**	900	136	6	6	7,5	841	729	819	–	–	–
N10/670-M1	1	348	**670**	980	136	7,5	7,5	12,7	905	–	–	774,5	–	–
NU30/670-M1	3	620	**670**	980	230	7,5	7,5	20,6	905	745	876,2	–	–	–
NU12/670-M	3	1 300	**670**	1 220	243	12	12	13,4	1 115	785	1 062	–	–	–
Z-527275.ZL	2	86,8	**710**	870	74	4	4	12	833	–	–	768,4	3,2	12,2
N18/710-M1	1	91,5	**710**	870	74	4	4	7,9	833	–	–	766,5	–	–
NU18/710-M1	3	91,7	**710**	870	74	4	4	7,9	833	753	820	–	–	–
NU19/710-M1	3	213	**710**	950	106	6	6	9,3	886	774	867,7	–	–	–
NU29/710-M1	3	289	**710**	950	140	6	6	11,7	890	770	866	–	–	–
NU29/710-M1A	3	289	**710**	950	140	6	6	11,7	890	770	866	–	–	–
N10/710-M1	1	401	**710**	1 030	140	7,5	7,5	12,6	950	–	–	819,5	–	–
NU10/710-M1	3	400	**710**	1 030	140	7,5	7,5	12,6	950	790	924,5	–	–	–
NU10/710-M1A	3	406	**710**	1 030	140	7,5	7,5	12,6	950	790	924,5	–	–	–
NU30/710-M1	3	673	**710**	1 030	236	7,5	7,5	22,3	950	790	924,5	–	–	–
Z-527250.ZL	2	79	**720**	880	62	4	4	9	839	–	–	780,9	3,2	12,2
Z-536020.ZL	2	95	**750**	920	68	5	5	12	875	–	–	817	3,2	12,2
Z-526719.ZL	2	106	**750**	920	78	5	5	15	879	–	–	812,2	3,2	12,2
NU18/750-M1	3	108	**750**	920	78	5	5	8,8	879	799	866	–	–	–
NU38/750-M1	3	182	**750**	920	128	5	5	14	879	799	866	–	–	–
NU19/750-M1	3	245	**750**	1 000	112	6	6	12,1	935	815	911	–	–	–
NU29/750-M1	3	329	**750**	1 000	145	6	6	8	940	810	919	–	–	–
N10/750-M1	1	481	**750**	1 090	150	7,5	7,5	13,6	1 005	–	–	866	–	–

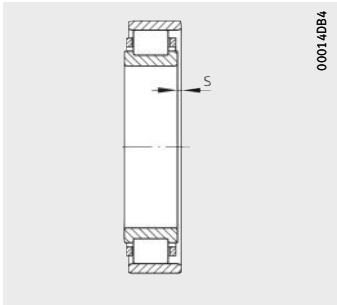

[1] Axial displacement “s” for N and NU

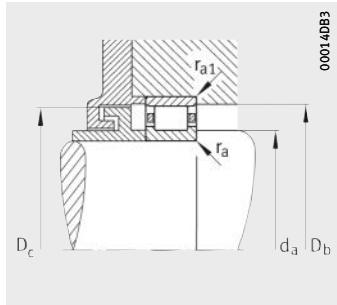

Mounting dimensions for N

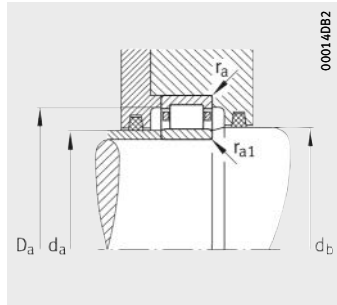

Mounting dimensions for NU

Mounting dimensions								Basic load ratings		Fatigue limit load	Limiting speed	Reference speed
d_a		d_b	D_a	D_b	D_c	r_a	r_{a1}	dyn. C_r	stat. C_{0r}	C_{ur}	n_G	n_B
min.	max.	min.	max.	min.	max.	max.	max.	kN	kN	kN	min^{-1}	min^{-1}
658	–	–	892	856	844	6	6	3 250	6 200	495	1 100	500
658	695	705	892	–	–	6	6	5 700	12 500	1 030	1 100	300
662	722	732	998	–	–	6	6	9 150	18 000	1 430	900	260
684	740	745	1 096	–	–	12	12	7 800	13 200	1 000	800	300
655	–	–	775	756	744	3	3	610	1 250	78	1 400	–
685	–	–	805	784	772	3	3	530	1 100	67	1 400	–
685	–	–	805	790	778	3	3	680	1 370	85	1 400	–
685	707	717	805	–	–	3	3	1 180	2 750	197	1 400	–
685	–	–	805	791	777	3	3	1 760	4 650	385	1 200	400
685	707	717	805	–	–	3	3	1 760	4 650	385	1 200	400
685	707	717	805	–	–	3	3	1 760	4 650	385	1 200	400
685	707	717	805	–	–	3	3	2 120	5 850	320	1 200	360
693	726	736	877	–	–	5	5	2 040	4 250	300	1 200	–
693	724	734	877	–	–	5	5	3 450	8 150	690	1 100	340
698	–	–	952	911	899	6	6	3 750	7 100	540	950	450
698	740	750	952	–	–	6	6	6 550	14 600	1 180	950	260
718	780	790	1 172	–	–	10	10	9 150	14 300	1 050	800	280
725	–	–	855	840	826	3	3	800	1 560	124	1 200	–
725	–	–	855	840	826	3	3	1 400	3 250	260	1 200	–
725	748	758	855	–	–	3	3	1 400	3 250	230	1 200	–
733	769	779	927	–	–	5	5	2 240	4 750	300	1 100	–
733	765	775	927	–	–	5	5	3 750	8 800	710	1 000	320
733	765	775	927	–	–	5	5	3 750	8 800	710	1 000	320
738	–	–	1 002	957	943	6	6	4 050	8 000	620	950	430
738	784	796	1 002	–	–	6	6	4 050	8 000	510	950	425
738	784	796	1 002	–	–	6	6	4 050	8 000	510	950	425
738	785	795	1 002	–	–	6	6	6 800	15 600	1 250	950	240
735	–	–	865	846	832	3	3	800	1 700	104	1 200	–
767	–	–	903	882	868	4	4	735	1 560	94	1 100	–
767	–	–	903	886	872	4	4	850	1 700	102	1 100	–
767	794	804	903	–	–	4	4	1 430	3 450	213	1 100	–
767	794	804	903	–	–	4	4	2 550	7 350	590	1 100	320
773	810	820	977	–	–	5	5	2 500	5 300	365	1 100	–
773	805	815	977	–	–	5	5	4 150	9 650	770	950	300
778	–	–	1 062	1 012	998	6	6	4 500	9 000	680	850	400

Cylindrical roller bearings with cage

Single row
Non-locating bearings

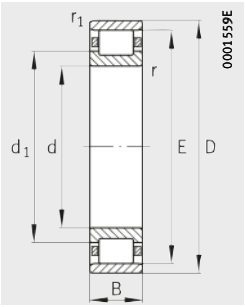

Design 1
N

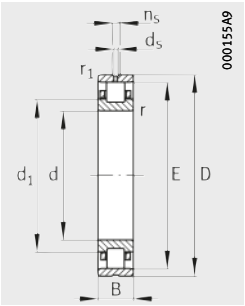

Design 2
N with lubrication groove and holes

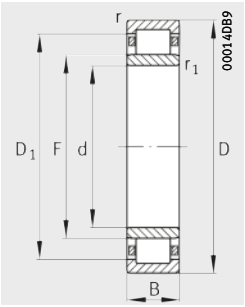

Design 3
NU

Dimension table (continued) · Dimensions in mm

Designation	Design	Mass	Dimensions											
		m	d	D	B	r	r_1	$s^{2)}$	E	F	D_1	d_1	d_s	n_s
		≈kg				min.	min.				≈	≈		
NU10/750-M1	3	480	**750**	1 090	150	7,5	7,5	13,6	1 005	835	978	–	–	–
NU10/750-M1A	3	495	**750**	1 090	150	7,5	7,5	13,6	1 005	835	978	–	–	–
NU30/750-M1	3	808	**750**	1 090	250	7,5	7,5	20,5	1 005	835	978	–	–	–
Z-527276.ZL	2[1)]	113	**800**	980	82	5	5	15	939	–	–	866,2	3,2	12,2
NU18/800-M1	3	129	**800**	980	82	5	5	8,9	939	849	923	–	–	–
NU38/800-M1	3	220	**800**	980	136	5	5	14	939	849	923	–	–	–
NU19/800-M1	3	276	**800**	1 060	115	6	6	12,8	990	870	968,4	–	–	–
NU29/800-M1	3	378	**800**	1 060	150	6	6	13,3	995	865	969	–	–	–
N10/800-M1	1	556	**800**	1 150	155	7,5	7,5	13,6	1 065	–	–	918	–	–
NU10/800-M1	3	557	**800**	1 150	155	7,5	7,5	13,6	1 065	885	1 036	–	–	–
NU10/800-M1A	3	557	**800**	1 150	155	7,5	7,5	13,6	1 065	885	1 036	–	–	–
NU30/800-M1	3	912	**800**	1 150	258	7,5	7,5	22,5	1 065	885	1 036	–	–	–
Z-527251.ZL	2	101	**820**	990	72	5	5	7,3	951	–	–	883,2	3,2	12,2
Z-526720.ZL	2[1)]	130	**850**	1 030	82	5	5	15	989	–	–	916,2	3,2	15
NU18/850-M1	3	137	**850**	1 030	82	5	5	9	985	895	970	–	–	–
NU28/650-M1	3	185	**850**	1 030	106	5	5	9,3	985	895	970	–	–	–
NU28/650-M1A	3	186	**850**	1 030	106	5	5	9,3	985	895	970	–	–	–
NU38/850-M1	3	232	**850**	1 030	136	5	5	14	985	895	970	–	–	–
NU19/850-M1	3	315	**850**	1 120	118	6	6	12,6	1 049	921	1 024,1	–	–	–
NU29/850-M1	3	427	**850**	1 120	155	6	6	8,6	1 053	917	1 031,5	–	–	–
N10/850-M1	1	658	**850**	1 220	165	7,5	7,5	13,5	1 125	–	–	978	–	–
NU10/850-M1	3	659	**850**	1 220	165	7,5	7,5	13,5	1 125	945	1 096,2	–	–	–
NU30/850-M	3	1 080	**850**	1 220	272	7,5	7,5	26	1 125	945	1 096,2	–	–	–
Z-527464.ZL	2[1)]	146	**900**	1 090	85	5	5	15	1 047	–	–	969,3	3,2	15
NU18/900-M1	3	159	**900**	1 090	85	5	5	11,8	1 047	951	1 031	–	–	–
NU38/900-M1	3	269	**900**	1 090	140	5	5	13,5	1 047	951	1 031	–	–	–
NU19/900-M1	3	354	**900**	1 180	122	6	6	9,8	1 108	972	1 086,2	–	–	–
NU29/900-M1	3	499	**900**	1 180	165	6	6	13,3	1 110	970	1 088	–	–	–
N10/900-M1	1	720	**900**	1 280	170	7,5	7,5	13,5	1 190	–	–	1 026	–	–
NU10/900-M1	3	728	**900**	1 280	170	7,5	7,5	13,5	1 190	990	1 158	–	–	–
NU30/900-M1	3	1 190	**900**	1 280	280	7,5	7,5	23	1 190	990	1 158	–	–	–

1) With thread M8 for eye bolts on the end faces.

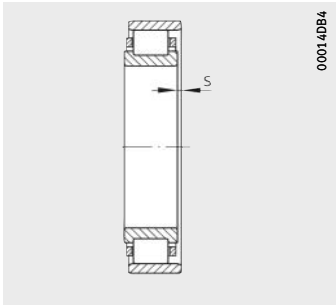

2) Axial displacement “s” for N and NU

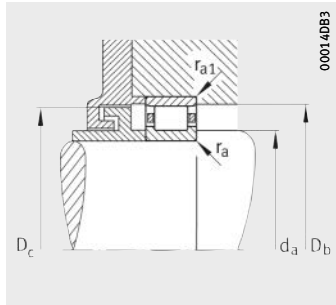

Mounting dimensions for N

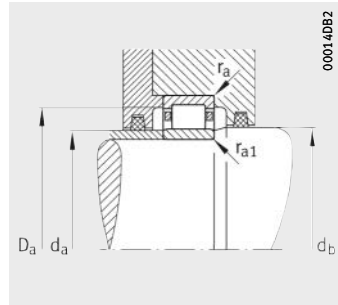

Mounting dimensions for NU

Mounting dimensions								Basic load ratings		Fatigue limit load	Limiting speed	Reference speed
d_a		d_b	D_a	D_b	D_c	r_a	r_{a1}	dyn. C_r	stat. C_{0r}	C_{ur}	n_G	n_B
min.	max.	min.	max.	min.	max.	max.	max.	kN	kN	kN	min^{-1}	min^{-1}
778	829	841	1 062	–	–	6	6	4 500	9 000	570	850	400
778	829	841	1 062	–	–	6	6	4 500	9 000	570	850	400
778	830	840	1 062	–	–	6	6	7 650	17 600	1 380	850	220
817	–	–	963	946	932	4	4	1 020	2 000	118	1 100	450
817	844	854	963	–	–	4	4	1 760	4 150	280	1 100	–
817	844	854	963	–	–	4	4	3 100	8 800	690	1 000	280
823	865	875	1 037	–	–	5	5	2 600	5 700	390	1 000	–
823	860	870	1 037	–	–	5	5	4 250	10 000	780	900	280
828	–	–	1 122	1 072	1 058	6	6	5 000	10 000	750	800	360
828	879	891	1 122	–	–	6	6	5 000	10 000	630	800	365
828	879	891	1 122	–	–	6	6	5 000	10 000	630	800	365
828	880	890	1 122	–	–	6	6	8 500	19 600	1 530	800	200
837	–	–	973	858	844	4	4	915	1 900	111	1 100	–
867	–	–	1 013	896	882	4	4	1 060	2 160	126	1 000	–
867	894	904	1 013	–	–	4	4	1 800	4 400	295	1 000	–
867	890	900	1 013	–	–	4	4	2 750	7 650	590	950	280
867	890	900	1 013	–	–	4	4	2 750	7 650	590	950	280
867	894	904	1 013	–	–	4	4	3 200	9 300	720	950	260
873	916	926	1 097	–	–	5	5	2 900	6 400	430	950	–
873	912	922	1 097	–	–	5	5	4 750	11 600	890	850	260
878	–	–	1 192	1 132	1 118	6	6	5 600	11 800	880	750	320
878	938	952	1 192	–	–	6	6	5 600	11 800	730	750	325
878	940	950	1 192	–	–	6	6	8 500	20 400	1 540	750	190
917	–	–	1 073	1 054	1 040	4	4	1 140	2 320	132	950	–
917	946	956	1 073	–	–	4	4	2 040	5 100	330	950	–
917	946	956	1 073	–	–	4	4	3 600	10 600	810	850	220
923	967	977	1 157	–	–	5	5	3 250	7 350	470	900	–
923	965	975	1 157	–	–	5	5	5 400	13 400	1 010	800	220
928	–	–	1 252	1 198	1 182	6	6	6 400	13 400	960	700	300
928	983	997	1 252	–	–	6	6	6 400	13 400	800	700	295
928	985	995	1 252	–	–	6	6	10 200	24 000	1 770	700	170

Cylindrical roller bearings with cage

Single row
Non-locating bearings

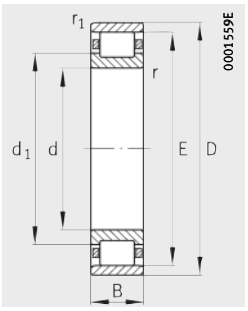

Design 1
N

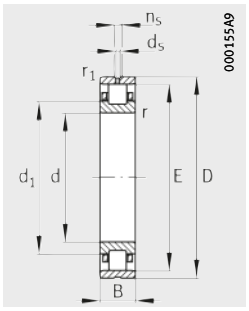

Design 2
N with lubrication groove and holes

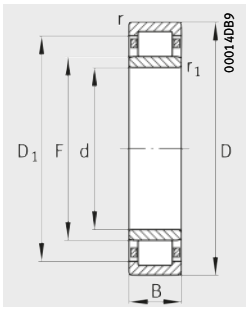

Design 3
NU

Dimension table (continued) · Dimensions in mm

Designation	Design	Mass	Dimensions											
		m	d	D	B	r	r_1	$s^{2)}$	E	F	D_1	d_1	d_s	n_s
		≈kg				min.	min.				≈	≈		
F-803618.ZL	$2^{1)}$	185	**950**	1 150	90	5	5	20,5	1 094	–	–	1 029,4	3,2	15
Z-527465.ZL	$2^{1)}$	171	**950**	1 150	90	5	5	15,5	1 104	–	–	1 024	3,2	15
NU18/950-M1	3	187	**950**	1 150	90	5	5	9,5	1 104	1 004	1 088	–	–	–
NU38/950-M1	3	318	**950**	1 150	150	5	5	15	1 104	1 004	1 088	–	–	–
NU19/950-M1	3	435	**950**	1 250	132	7,5	7,5	13,9	1 175	1 025	1 151	–	–	–
NU29/950-M1	3	596	**950**	1 250	175	7,5	7,5	14,5	1 175	1 025	1 151	–	–	–
N10/950-M1	1	898	**950**	1 360	180	7,5	7,5	13,5	1 255	–	–	1 091	–	–
NU10/950-M1	3	899	**950**	1 360	180	7,5	7,5	13,5	1 255	1 055	1 223	–	–	–
NU30/950-M	3	1 490	**950**	1 360	300	7,5	7,5	28	1 255	1 055	1 223	–	–	–
NU31/950-M	3	3 080	**950**	1 500	438	12	12	–	1 361	1 089	1 317	–	–	–
Z-527466.ZL	$2^{1)}$	198	**1 000**	1 210	92	6	6	16	1 155	–	–	1 075	4,8	15
NU18/1000-M1	3	242	**1 000**	1 220	100	6	6	10,3	1 170	1 058	1 150	–	–	–
NU28/1000-M	3	324	**1 000**	1 220	128	6	6	11	1 170	1 058	1 150	–	–	–
NU28/1000-MA	3	326	**1 000**	1 220	128	6	6	11	1 170	1 058	1 150	–	–	–
NU38/1000-M	3	411	**1 000**	1 220	165	6	6	16,3	1 170	1 058	1 150	–	–	–
Z-507276.ZL	3	423	**1 000**	1 290	130	7,5	7,5	11,3	1 215	1 075	1 187	–	–	–
NU19/1000-M1	3	527	**1 000**	1 320	140	7,5	7,5	10,5	1 240	1 080	1 214,4	–	–	–
NU29/1000-M1	3	708	**1 000**	1 320	185	7,5	7,5	16,3	1 240	1 080	1 215	–	–	–
N10/1000-M1	1	1 010	**1 000**	1 420	185	7,5	7,5	14,5	1 315	–	–	1 143	–	–
NU10/1000-M1	3	1 010	**1 000**	1 420	185	7,5	7,5	14,5	1 315	1 105	1 281	–	–	–
NU20/1000-E-M1	3	1 300	**1 000**	1 420	243	7,5	7,5	11,5	1 330	1 100	1 293	–	–	–
NU30/1000-M1	3	1 640	**1 000**	1 420	308	7,5	7,5	28	1 315	1 105	1 281	–	–	–
Z-539392.ZL	2	203	**1 030**	1 240	92	6	6	15	1 185	–	–	1 104	4,8	15
Z-539393.ZL	2	257	**1 030**	1 250	100	6	6	–	1 190	–	–	1 109	–	–
Z-526747.ZL	$2^{1)}$	211	**1 060**	1 270	92	6	6	16	1 215	–	–	1 134	4,8	9,5
Z-535549.ZL	2	240	**1 060**	1 280	100	6	6	12,5	1 220	–	–	1 139	4,8	9,5
NU18/1060-M1	3	259	**1 060**	1 280	100	6	6	10,3	1 230	1 118	1 210	–	–	–
NU28/1060-M	3	341	**1 060**	1 280	128	6	6	11	1 230	1 118	1 210	–	–	–
NU38/1060-M	3	431	**1 060**	1 280	165	6	6	16,3	1 230	1 118	1 210	–	–	–
NU19/1060-M1	3	630	**1 060**	1 400	150	7,5	7,5	11,5	1 312	1 148	1 285,8	–	–	–
NU29/1060-M1	3	830	**1 060**	1 400	195	7,5	7,5	16,2	1 315	1 145	1 288	–	–	–
N10/1060-M1	1	1 150	**1 060**	1 500	195	9,5	9,5	14,5	1 390	–	–	1 210	–	–
NU10/1060-M1	3	1 150	**1 060**	1 500	195	9,5	9,5	14,5	1 390	1 170	1 355	–	–	–

1) With thread M8 for eye bolts on the end faces.

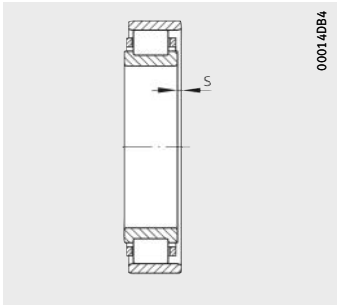

2) Axial displacement “s” for N and NU

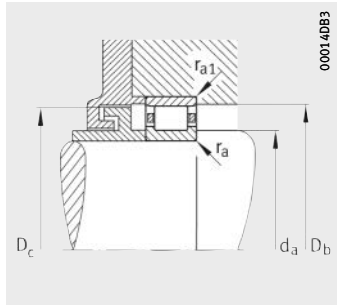

Mounting dimensions for N

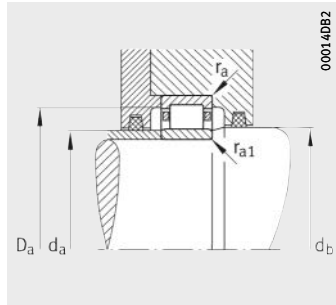

Mounting dimensions for NU

Mounting dimensions								Basic load ratings		Fatigue limit load	Limiting speed	Reference speed
d_a		d_b	D_a	D_b	D_c	r_a	r_{a1}	dyn. C_r	stat. C_{0r}	C_{ur}	n_G	n_B
min.	max.	min.	max.	min.	max.	max.	max.	kN	kN	kN	min^{-1}	min^{-1}
967	–	–	1 133	1 102	1 086	4	4	880	1 960	118	900	–
967	–	–	1 133	1 112	1 096	4	4	1 200	2 450	141	900	–
967	999	1 009	1 133	–	–	4	4	2 200	5 500	340	900	–
967	999	1 009	1 133	–	–	4	4	3 900	11 600	880	800	220
978	1 020	1 030	1 222	–	–	6	6	3 800	8 500	540	800	–
978	1 020	1 030	1 222	–	–	6	6	5 850	14 600	1 090	750	220
978	–	–	1 332	1 263	1 247	6	6	7 200	15 600	1 110	700	260
978	1 048	1 062	1 332	–	–	6	6	7 200	15 600	920	700	265
978	1 050	1 060	1 332	–	–	6	6	11 400	28 000	2 070	700	150
992	1 083	1 095	1 458	–	–	10	10	16 300	36 500	2 500	430	–
1 023	–	–	1 187	1 163	1 147	5	5	1 250	2 650	151	850	–
1 023	1 053	1 063	1 197	–	–	5	5	2 450	5 850	390	850	–
1 023	1 053	1 063	1 197	–	–	5	5	3 650	10 000	760	750	220
1 023	1 053	1 063	1 197	–	–	5	5	3 650	10 000	760	750	220
1 023	1 053	1 063	1 197	–	–	5	5	4 400	12 700	960	750	200
1 028	1 070	1 080	1 262	–	–	6	6	3 550	8 150	520	800	–
1 028	1 075	1 085	1 292	–	–	6	6	4 400	9 800	600	750	–
1 028	1 075	1 085	1 292	–	–	6	6	6 550	16 300	1 170	700	200
1 028	–	–	1 392	1 323	1 307	6	6	7 500	16 300	1 150	630	260
1 028	1 098	1 112	1 392	–	–	6	6	7 500	16 300	960	630	255
1 028	1 095	1 105	1 392	–	–	6	6	10 600	23 600	1 700	630	170
1 028	1 100	1 110	1 392	–	–	6	6	12 500	31 000	2 250	630	140
1 053	–	–	1 217	1 193	1 177	5	5	1 250	2 650	149	850	–
1 053	–	–	1 227	1 198	1 182	5	5	2 080	5 300	380	850	260
1 083	–	–	1 247	1 223	1 207	5	5	1 320	2 850	159	800	–
1 083	–	–	1 257	1 228	1 212	5	5	1 320	2 850	159	800	–
1 083	1 113	1 123	1 257	–	–	5	5	2 550	6 400	415	800	–
1 083	1 113	1 123	1 257	–	–	5	5	3 800	10 600	790	700	220
1 083	1 113	1 123	1 257	–	–	5	5	4 550	13 400	1 000	700	190
1 088	1 143	1 153	1 372	–	–	6	6	4 650	10 600	650	700	–
1 088	1 140	1 150	1 372	–	–	6	6	7 350	18 600	1 330	700	180
1 094	–	–	1 466	1 398	1 382	8	8	8 500	18 600	1 300	600	220
1 094	1 163	1 177	1 466	–	–	8	8	8 500	18 600	1 080	600	231

Cylindrical roller bearings with cage

Single row
Non-locating bearings

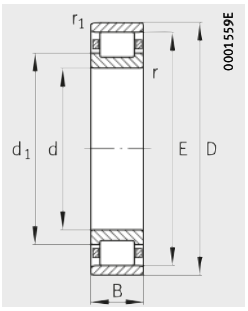

Design 1
N

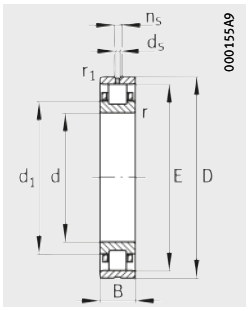

Design 2
N with lubrication groove and holes

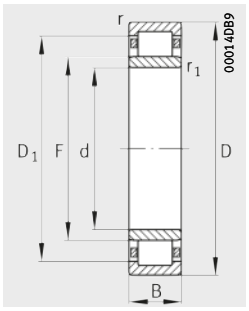

Design 3
NU

Dimension table (continued) · Dimensions in mm

Designation	Design	Mass	Dimensions											
		m	d	D	B	r	r_1	s[3]	E	F	D_1	d_1	d_s	n_s
		≈kg				min.	min.				≈	≈		
NU20/1060-E-M1	3	1 480	**1 060**	1 500	250	9,5	9,5	11,5	1 405	1 165	1 367	–	–	–
NU30/1060-M1	3	1 920	**1 060**	1 500	325	9,5	9,5	29,8	1 390	1 170	1 355	–	–	–
F-808288.ZL	3	118	**1 110**	1 240	85	6	2	5	1 205	1 145	1 195	–	–	–
Z-527467.ZL	2[1]	239	**1 120**	1 340	94	6	6	17	1 280	–	–	1 199	4,8	9,5
Z-535550.ZL	2	284	**1 120**	1 360	104	6	6	20	1 290	–	–	1 209	4,8	9,5
NU18/1120-M1	3	312	**1 120**	1 360	106	6	6	11	1 305	1 185	1 286	–	–	–
NU38/1120-M	3	547	**1 120**	1 360	180	6	6	18	1 305	1 185	1 286	–	–	–
NU19/1120-M1	3	665	**1 120**	1 460	150	7,5	7,5	11,5	1 372	1 208	1 346	–	–	–
NU29/1120-M1	3	887	**1 120**	1 460	195	7,5	7,5	13,8	1 375	1 205	1 347,8	–	–	–
N10/1120-M1	1	1 300	**1 120**	1 580	200	9,5	9,5	16	1 465	–	–	1 276	–	–
NU10/1120-M1	3	1 300	**1 120**	1 580	200	9,5	9,5	16	1 465	1 235	1 428	–	–	–
NU20/1120-E-M1	3	1 710	**1 120**	1 580	265	9,5	9,5	13	1 480	1 230	1 440	–	–	–
NU30/1120-M1	3	2 260	**1 120**	1 580	345	9,5	9,5	32,3	1 465	1 235	1 428	–	–	–
Z-527468.ZL	2[1]	245	**1 180**	1 400	94	6	6	17	1 342	–	–	1 257,8	4,8	9,5
NU18/1180-M1	3	329	**1 180**	1 420	106	6	6	11	1 365	1 245	1 346	–	–	–
NU38/1180-M	3	569	**1 180**	1 420	180	6	6	18	1 365	1 245	1 346	–	–	–
NU19/1180-M1	3	789	**1 180**	1 540	160	7,5	7,5	12,5	1 445	1 275	1 418	–	–	–
NU29/1180-M1	3	1 060	**1 180**	1 540	206	7,5	7,5	16,5	1 450	1 270	1 421	–	–	–
NU39/1180-E-M1	3	1 350	**1 180**	1 540	272	7,5	7,5	13,9	1 460	1 270	1 432	–	–	–
N10/1180-M1	1	1 520	**1 180**	1 660	212	9,5	9,5	17	1 540	–	–	1 343	–	–
NU10/1180-M1	3	1 520	**1 180**	1 660	212	9,5	9,5	17	1 540	1 300	1 502	–	–	–
NU20/1180-E-M1	3	1 940	**1 180**	1 660	272	9,5	9,5	13	1 555	1 295	1 513	–	–	–
NU30/1180-M	3	2 520	**1 180**	1 660	355	9,5	9,5	32,3	1 540	1 300	1 502	–	–	–
Z-527469.ZL	2[2]	278	**1 250**	1 480	95	6	6	17	1 417	–	–	1 333	4,8	15
Z-566705.ZL	2	337	**1 250**	1 500	106	6	6	15	1 444	–	–	1 340	4,8	15
NU18/1250-M1	3	390	**1 250**	1 500	112	6	6	11,4	1 444	1 316	1 423,3	–	–	–
NU38/1250-M	3	654	**1 250**	1 500	185	6	6	17,3	1 444	1 316	1 423,3	–	–	–
NU19/1250-M1	3	938	**1 250**	1 630	170	7,5	7,5	13	1 530	1 350	1 501,2	–	–	–
NU29/1250-M1	3	1 260	**1 250**	1 630	218	7,5	7,5	10,3	1 535	1 345	1 505	–	–	–
NU39/1250-E-M1	3	1 570	**1 250**	1 630	280	7,5	7,5	13,6	1 545	1 345	1 516	–	–	–
N10/1250-M1	1	1 710	**1 250**	1 750	218	9,5	9,5	18,5	1 625	–	–	1 419	–	–
NU10/1250-M1	3	1 710	**1 250**	1 750	218	9,5	9,5	18,5	1 625	1 375	1 585	–	–	–

1) With thread M8 for eye bolts on the end faces.

2) With thread M10 for eye bolts on the end faces.

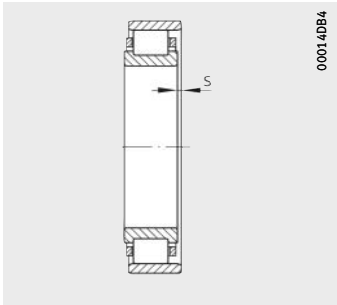

3) Axial displacement “s” for N and NU

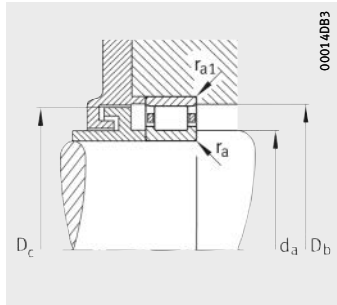

Mounting dimensions for N

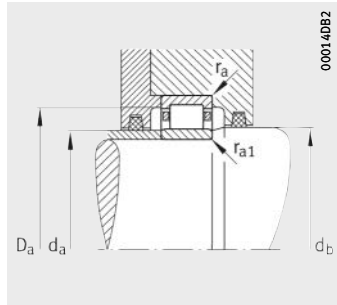

Mounting dimensions for NU

Mounting dimensions								Basic load ratings		Fatigue limit load	Limiting speed	Reference speed
d_a		d_b	D_a	D_b	D_c	r_a	r_{a1}	dyn. C_r	stat. C_{0r}	C_{ur}	n_G	n_B
min.	max.	min.	max.	min.	max.	max.	max.	kN	kN	kN	min^{-1}	min^{-1}
1 094	1 160	1 170	1 466	–	–	8	8	11 600	26 500	1 830	600	150
1 094	1 165	1 175	1 466	–	–	8	8	13 200	32 500	2 280	430	–
1 119	1 140	1 150	1 217	–	–	5	2	1 120	3 450	241	850	–
1 143	–	–	1 317	1 288	1 272	5	5	1 370	3 050	168	750	–
1 143	–	–	1 337	1 298	1 282	5	5	1 370	3 050	167	750	–
1 143	1 180	1 190	1 337	–	–	5	5	2 850	7 100	450	750	–
1 143	1 180	1 190	1 337	–	–	5	5	5 100	15 000	1 090	700	180
1 148	1 203	1 213	1 432	–	–	6	6	4 750	11 200	680	700	–
1 148	1 200	1 210	1 432	–	–	6	6	7 500	19 600	1 380	630	170
1 154	–	–	1 546	1 474	1 456	8	8	9 000	20 000	1 380	560	220
1 154	1 228	1 242	1 546	–	–	8	8	9 000	20 000	1 150	560	215
1 154	1 225	1 235	1 546	–	–	8	8	12 000	27 500	1 870	560	150
1 154	1 230	1 240	1 546	–	–	8	8	14 600	37 500	2 550	400	–
1 203	–	–	1 377	1 351	1 333	5	5	1 460	3 350	180	750	–
1 203	1 240	1 250	1 397	–	–	5	5	3 000	7 800	485	700	–
1 203	1 240	1 250	1 397	–	–	5	5	5 400	16 300	1 180	630	160
1 208	1 270	1 280	1 512	–	–	6	6	5 100	12 000	720	700	–
1 208	1 265	1 275	1 512	–	–	6	6	8 500	22 000	1 550	600	150
1 208	1 265	1 275	1 512	–	–	6	6	10 600	28 500	1 790	600	130
1 214	–	–	1 626	1 549	1 531	8	8	10 000	22 800	1 500	560	200
1 214	1 293	1 307	1 626	–	–	8	8	10 000	22 800	1 260	560	199
1 214	1 290	1 300	1 626	–	–	8	8	13 400	31 000	2 100	530	130
1 214	1 295	1 305	1 626	–	–	8	8	14 600	36 500	2 420	380	–
1 273	–	–	1 457	1 426	1 408	5	5	1 500	3 550	189	700	–
1 273	–	–	1 477	1 453	1 435	5	5	2 120	4 650	255	700	–
1 273	1 311	1 321	1 477	–	–	5	5	3 350	8 650	530	700	–
1 273	1 311	1 321	1 477	–	–	5	5	6 100	18 600	1 320	600	140
1 278	1 345	1 355	1 602	–	–	6	6	5 700	13 700	820	630	–
1 278	1 340	1 350	1 602	–	–	6	6	9 650	25 500	1 760	560	140
1 278	1 340	1 350	1 602	–	–	6	6	11 800	32 500	2 220	560	110
1 284	–	–	1 716	1 634	1 616	8	8	10 600	24 500	1 590	530	180
1 284	1 368	1 382	1 716	–	–	8	8	10 600	24 500	1 340	530	186

Cylindrical roller bearings with cage

Single row
Non-locating bearings

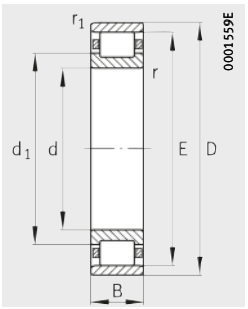

Design 1
N

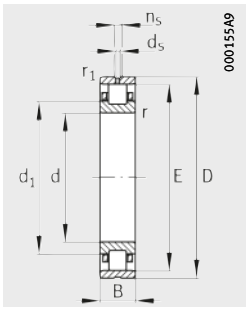

Design 2
N with lubrication groove and holes

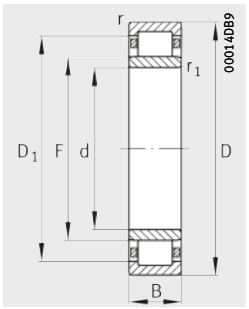

Design 3
NU

Dimension table (continued) · Dimensions in mm

Designation	De-sign	Mass	Dimensions											
		m	d	D	B	r	r_1	$s^{2)}$	E	F	D_1	d_1	d_s	n_s
		≈kg				min.	min.				≈	≈		
NU20/1250-E-M1	3	2 270	**1 250**	1 750	290	9,5	9,5	13,5	1 635	1 375	1 593	–	–	–
NU30/1250-M	3	2 940	**1 250**	1 750	375	9,5	9,5	35,3	1 625	1 375	1 585	–	–	–
Z-529599.ZL	$2^{1)}$	301	**1 320**	1 550	95	6	6	17	1 487	–	–	1 403	4,8	15
Z-526748.ZL	2	478	**1 320**	1 600	122	6	6	10	1 533	–	–	1 422	9,5	17,7
NU18/1320-M1	3	497	**1 320**	1 600	122	6	6	12,8	1 533	1 397	1 511	–	–	–
NU38/1320-M	3	854	**1 320**	1 600	206	6	6	20,5	1 533	1 397	1 511	–	–	–
NU19/1320-M1	3	1 080	**1 320**	1 720	175	7,5	7,5	13	1 615	1 425	1 584,6	–	–	–
NU29/1320-M1	3	1 470	**1 320**	1 720	230	7,5	7,5	17,6	1 620	1 420	1 588	–	–	–
NU39/1320-E-M1	3	1 850	**1 320**	1 720	300	7,5	7,5	14,9	1 630	1 420	1 600	–	–	–
N10/1320-M1	1	2 040	**1 320**	1 850	230	12	12	19	1 715	–	–	1 501	–	–
NU10/1320-M1	3	2 030	**1 320**	1 850	230	12	12	19	1 715	1 455	1 673	–	–	–
NU20/1320-E-M1	3	2 650	**1 320**	1 850	300	12	12	14	1 725	1 455	1 682	–	–	–
NU30/1320-M	3	3 520	**1 320**	1 850	400	12	12	39	1 715	1 455	1 673	–	–	–
Z-527470.ZL	$2^{1)}$	362	**1 400**	1 650	100	7,5	7,5	18	1 577	–	–	1 493	4,8	15
NU18/1400-M1	3	625	**1 400**	1 700	132	7,5	7,5	13,4	1 630	1 480	1 606	–	–	–
NU38/1400-M	3	1 050	**1 400**	1 700	224	7,5	7,5	21,5	1 630	1 480	1 606	–	–	–
NU19/1400-M1	3	1 270	**1 400**	1 820	185	9,5	9,5	14	1 710	1 510	1 678	–	–	–
NU29/1400-M	3	1 710	**1 400**	1 820	243	9,5	9,5	18,8	1 715	1 505	1 681	–	–	–
NU39/1400-E-M1	3	2 170	**1 400**	1 820	315	9,5	9,5	15,5	1 726	1 506	1 694	–	–	–
N10/1400-M1	1	2 350	**1 400**	1 950	243	12	12	19,5	1 810	–	–	1 587	–	–
NU10/1400-M1	3	2 350	**1 400**	1 950	243	12	12	19,5	1 810	1 540	1 767	–	–	–
NU20/1400-E-M1	3	3 010	**1 400**	1 950	315	12	12	26,4	1 820	1 540	1 775	–	–	–
NU30/1400-M	3	3 970	**1 400**	1 950	412	12	12	39,5	1 810	1 540	1 767	–	–	–
Z-529600.ZL	$2^{1)}$	433	**1 500**	1 760	105	7,5	7,5	20	1 682	–	–	1 598	8	15
NU18/1500-M1	3	750	**1 500**	1 820	140	7,5	7,5	14,5	1 745	1 585	1 719	–	–	–
NU38/1500-M	3	1 300	**1 500**	1 820	243	7,5	7,5	23,8	1 745	1 585	1 719	–	–	–
NU29/1500-M	3	2 110	**1 500**	1 950	258	9,5	9,5	12	1 835	1 615	1 800	–	–	–
NU39/1500-E-M	3	2 640	**1 500**	1 950	335	9,5	9,5	15,5	1 851	1 611	1 817	–	–	–

1) With thread M10 for eye bolts on the end faces.

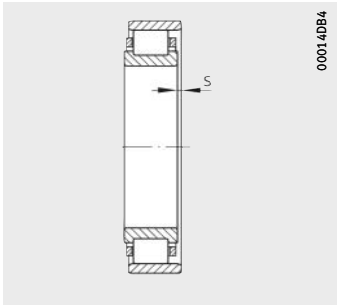

2) Axial displacement “s” for N and NU

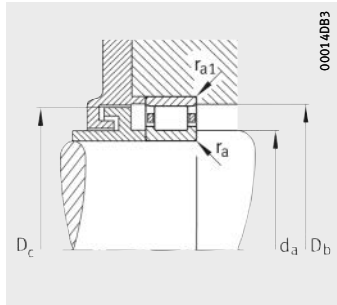

Mounting dimensions for N

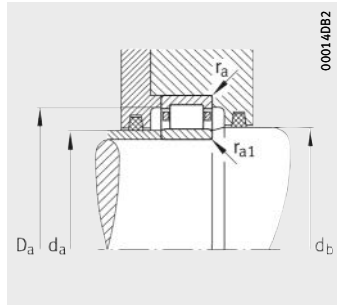

Mounting dimensions for NU

Mounting dimensions								Basic load ratings		Fatigue limit load	Limiting speed	Reference speed
d_a		d_b	D_a	D_b	D_c	r_a	r_{a1}	dyn. C_r	stat. C_{0r}	C_{ur}	n_G	n_B
min.	max.	min.	max.	min.	max.	max.	max.	kN	kN	kN	min^{-1}	min^{-1}
1 284	1 370	1 380	1 716	–	–	8	8	13 700	32 500	2 190	530	130
1 284	1 370	1 380	1 716	–	–	8	8	16 300	41 500	2 700	360	–
1 243	–	–	1 527	1 496	1 478	5	5	1 560	3 750	197	700	–
1 243	–	–	1 577	1 542	1 524	5	5	2 600	6 000	315	630	–
1 243	1 392	1 402	1 577	–	–	5	5	3 800	10 200	600	630	–
1 243	1 392	1 402	1 577	–	–	5	5	6 800	21 200	1 450	560	130
1 348	1 420	1 430	1 692	–	–	6	6	6 400	15 600	910	600	–
1 348	1 415	1 425	1 692	–	–	6	6	10 600	29 000	1 930	530	120
1 348	1 415	1 425	1 692	–	–	6	6	12 900	36 000	2 420	530	110
1 362	–	–	1 808	1 724	1 706	10	10	11 800	27 000	1 750	500	170
1 362	1 448	1 462	1 808	–	–	10	10	11 800	27 000	1 480	500	171
1 362	1 450	1 460	1 808	–	–	10	10	15 600	38 000	2 500	500	110
1 362	1 450	1 460	1 808	–	–	10	10	18 300	48 000	3 100	340	–
1 428	–	–	1 622	1 586	1 568	6	6	1 600	4 000	206	630	–
1 428	1 475	1 485	1 672	–	–	6	6	4 550	12 000	700	600	–
1 428	1 475	1 485	1 672	–	–	6	6	8 150	25 500	1 710	530	120
1 434	1 505	1 515	1 786	–	–	8	8	7 200	17 600	1 000	560	–
1 434	1 500	1 510	1 786	–	–	8	8	11 400	30 500	2 020	500	120
1 434	1 501	1 511	1 786	–	–	8	8	14 300	40 500	2 700	500	95
1 442	–	–	1 908	1 819	1 801	10	10	13 200	31 000	1 980	480	150
1 442	1 533	1 547	1 908	–	–	10	10	13 200	31 000	1 670	480	155
1 442	1 535	1 545	1 908	–	–	10	10	16 600	40 500	2 600	480	110
1 442	1 535	1 545	1 908	–	–	10	10	19 300	51 000	3 250	340	–
1 528	–	–	1 732	1 691	1 673	6	6	1 630	4 150	214	600	–
1 528	1 580	1 590	1 792	–	–	6	6	5 200	14 000	780	560	–
1 528	1 580	1 590	1 792	–	–	6	6	9 150	29 000	1 890	500	110
1 534	1 610	1 620	1 916	–	–	8	8	12 700	34 500	2 250	480	110
1 534	1 606	1 616	1 916	–	–	8	8	16 000	45 000	2 850	480	90

Cylindrical roller bearings with cage

Single row
Non-locating bearings

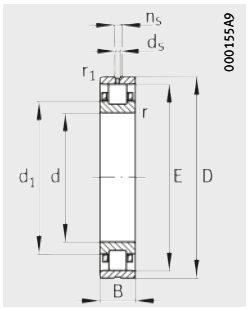

Design 2
N with lubrication groove and holes

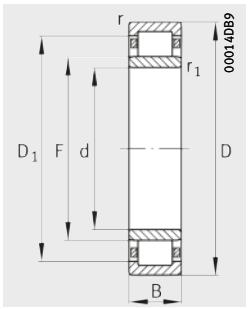

Design 3
NU

Dimension table (continued) · Dimensions in mm

Designation	Design	Mass	Dimensions											
		m	d	D	B	r	r_1	$s^{3)}$	E	F	D_1	d_1	d_s	n_s
		≈kg				min.	min.				≈	≈		
Z-529601.ZL	2[1)]	553	**1 600**	1 890	110	7,5	7,5	21	1 799	–	–	1 711	4,8	15
NU28/1600-MA	3	1 270	**1 600**	1 950	200	7,5	7,5	20	1 870	1 690	1 841	–	–	–
NU38/1600-M	3	1 670	**1 600**	1 950	265	7,5	7,5	24,3	1 870	1 690	1 841	–	–	–
NU29/1600-M	3	2 310	**1 600**	2 060	265	9,5	9,5	12,3	1 945	1 715	1 908	–	–	–
Z-529602.ZL	2[1)]	631	**1 700**	2 000	115	7,5	7,5	22	1 906	–	–	1 815	4,8	15
NU38/1700-M	3	1 860	**1 700**	2 060	272	7,5	7,5	23,5	1 980	1 790	1 950	–	–	–
NU29/1700-M	3	2 730	**1 700**	2 180	280	9,5	9,5	12,9	2 060	1 820	2 022	–	–	–
Z-529603.ZL	2[1)]	717	**1 800**	2 110	120	9,5	9,5	23	2 015	–	–	1 918	8	15
NU38/1800-M	3	2 210	**1 800**	2 180	290	9,5	9,5	25,5	2 095	1 895	2 063	–	–	–
NU29/1800-M	3	3 110	**1 800**	2 300	290	12	12	14	2 175	1 925	2 135	–	–	–
Z-529604.ZL	2[2)]	829	**1 900**	2 230	125	9,5	9,5	23	2 129	–	–	2 025	8	15
NU38/1900-M	3	2 560	**1 900**	2 300	300	9,5	9,5	26	2 210	2 000	2 176	–	–	–
NU29/1900-M	3	3 700	**1 900**	2 430	308	12	12	14,4	2 300	2 030	2 257	–	–	–
Z-529605.ZL	2[2)]	977	**2 000**	2 350	130	9,5	9,5	24	2 243	–	–	2 132	8	15
NU38/2000-M	3	3 130	**2 000**	2 430	325	9,5	9,5	29,8	2 330	2 110	2 295	–	–	–
Z-540513.ZL	3	627	**2 550**	2 780	100	4	4	14,5	2 710	2 626	2 696	–	–	–

1) With thread M12 for eye bolts on the end faces.
2) With thread M16 for eye bolts on the end faces.

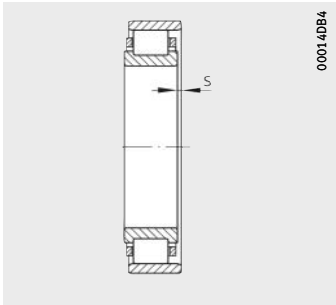

3) Axial displacement “s” for N and NU

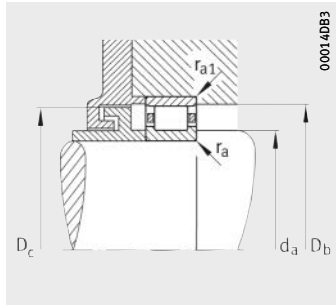

Mounting dimensions for N

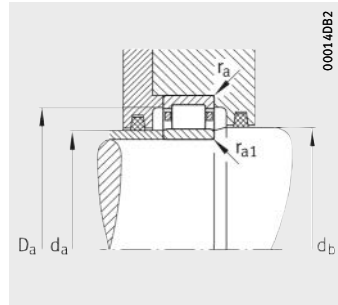

Mounting dimensions for NU

Mounting dimensions								Basic load ratings		Fatigue limit load	Limiting speed	Reference speed
d_a		d_b	D_a	D_b	D_c	r_a	r_{a1}	dyn. C_r	stat. C_{0r}	C_{ur}	n_G	n_B
min.	max.	min.	max.	min.	max.	max.	max.	kN	kN	kN	min^{-1}	min^{-1}
1 628	–	–	1 862	1 808	1 790	6	6	1 830	4 750	239	560	–
1 628	1 685	1 695	1 922	–	–	6	6	8 300	24 000	1 540	480	120
1 628	1 685	1 695	1 922	–	–	6	6	11 000	34 000	2 200	480	95
1 634	1 710	1 720	2 026	–	–	8	8	13 400	37 500	2 380	480	100
1 728	–	–	1 972	1 916	1 896	6	6	1 930	5 000	255	530	–
1 728	1 785	1 795	2 032	–	–	6	6	12 200	38 000	2 460	480	85
1 734	1 815	1 825	2 146	–	–	8	8	15 000	42 500	2 600	450	90
1 834	–	–	2 076	2 025	2 005	8	8	2 200	5 850	290	500	–
1 834	1 890	1 900	2 146	–	–	8	8	13 400	42 500	2 650	450	80
1 842	1 920	1 930	2 258	–	–	10	10	16 000	46 500	2 800	430	80
1 934	–	–	2 196	2 139	2 119	8	8	2 500	6 700	325	480	–
1 934	1 995	2 005	2 266	–	–	8	8	15 000	48 000	2 950	430	70
1 942	2 025	2 035	2 388	–	–	10	10	18 300	52 000	3 150	430	75
2 034	–	–	2 316	2 253	2 233	8	8	2 800	7 500	360	480	–
2 034	2 105	2 115	2 396	–	–	8	8	16 600	54 000	3 250	430	67
2 565	–	–	2 765	–	–	3	3	2 750	11 600	470	380	–

Cylindrical roller bearings with cage

Single row
Semi-locating and locating bearings

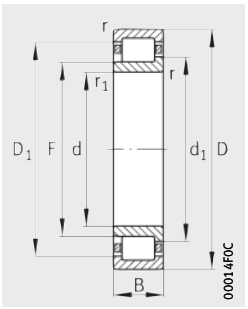

Design 1
NJ
Semi-locating bearing

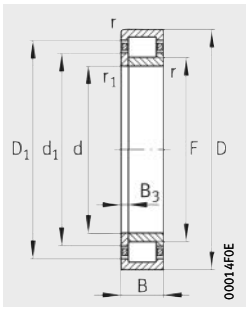

Design 1
NUP
Locating bearing

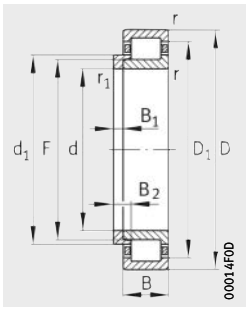

Design 1
NJ and HJ
Locating bearing

Dimension table · Dimensions in mm

Designation			Design	Mass m		Dimensions								
Bearing	X-life	L-section ring		Bearing ≈kg	L-section ring ≈kg	d	D	B	r min.	r_1 min.	s[2]	F	D_1 ≈	d_1 ≈
NJ426-M1	–	–	1	41,2	–	**130**	340	78	5	5	6,2	185	265,9	204,2
NJ426-M1	–	**HJ426**	1	41,2	12,2	**130**	340	78	5	5	–	185	265,9	204,2
NUP426-M1	–	–	1	41,9	–	**130**	340	78	5	5	–	185	265,9	204,2
NJ428-M1	–	–	1	48,2	–	**140**	360	82	5	5	7,6	198	282,9	218,2
NJ428-M1	–	**HJ428**	1	48,2	3,79	**140**	360	82	5	5	–	198	282,9	218,2
NUP428-M1	–	–	1	49	–	**140**	360	82	5	5	–	198	282,9	218,2
NJ330-E-M1	**XL**	–	1	27,4	–	**150**	320	65	4	4	5,5	193	269,8	209,5
NJ330-E-M1	**XL**	**HJ330-E**	1	27,4	2,33	**150**	320	65	4	4	–	193	269,8	209,5
NJ330-E-M1A	**XL**	–	1	27,4	–	**150**	320	65	4	4	5,5	193	269,8	209,5
NJ330-E-M1A	**XL**	**HJ330-E**	1	27,4	2,33	**150**	320	65	4	4	–	193	269,8	209,5
NJ330-E-MP1A	**XL**	–	1	26,9	–	**150**	320	65	4	4	5,5	193	269,8	209,5
NJ330-E-MP1A	**XL**	**HJ330-E**	1	26,9	2,33	**150**	320	65	4	4	–	193	269,8	209,5
NJ330-E-MPA	**XL**	–	1	28,3	–	**150**	320	65	4	4	5,5	193	269,8	209,5
NJ330-E-MPA	**XL**	**HJ330-E**	1	28,3	2,33	**150**	320	65	4	4	–	193	269,8	209,5
NUP330-E-M1	**XL**	–	1	27,8	–	**150**	320	65	4	4	–	193	269,8	209,5
NUP330-E-M1A	**XL**	–	1	27,8	–	**150**	320	65	4	4	–	193	269,8	209,5
NUP330-E-MP1A	**XL**	–	1	27,3	–	**150**	320	65	4	4	–	193	269,8	209,5
NUP330-E-MPA	**XL**	–	1	28,7	–	**150**	320	65	4	4	–	193	269,8	209,5
NJ2330-E-M1	**XL**	–	1	44,1	–	**150**	320	108	4	4	9,7	193	269,8	209,5
NJ2330-E-M1	**XL**	**HJ2330-E**	1	44,1	2,55	**150**	320	108	4	4	–	193	269,8	209,5
NJ2330-E-M1A	**XL**	–	1	44,1	–	**150**	320	108	4	4	9,7	193	269,8	209,5
NJ2330-E-M1A	**XL**	**HJ2330-E**	1	44,1	2,55	**150**	320	108	4	4	–	193	269,8	209,5
NJ2330-E-MP1A	**XL**	–	1	43,9	–	**150**	320	108	4	4	9,7	193	269,8	209,5
NJ2330-E-MP1A	**XL**	**HJ2330-E**	1	43,9	2,55	**150**	320	108	4	4	–	193	269,8	209,5
NUP2330-E-M1	**XL**	–	1	44,8	–	**150**	320	108	4	4	–	193	269,8	209,5
NUP2330-E-M1A	**XL**	–	1	44,8	–	**150**	320	108	4	4	–	193	269,8	209,5
NJ430-M1	–	–	1	55,3	–	**150**	380	85	5	5	8,1	213	297,9	233,2
NJ430-M1	–	**HJ430**	1	55,3	4,76	**150**	380	85	5	5	–	213	297,9	233,2
NUP430-M1	–	–	1	56,3	–	**150**	380	85	5	5	–	213	297,9	233,2
NJ332-E-M1	–	–	1	32,3	–	**160**	340	68	4	4	5,6	204	286	221,6
NJ332-E-M1	–	**HJ332-E**	1	32,3	2,58	**160**	340	68	4	4	–	204	286	221,6
NJ332-E-M1A	–	–	1	32,3	–	**160**	340	68	4	4	5,6	204	286	221,6

1) Under axial load, observe the dimensions D_1 and d_1.

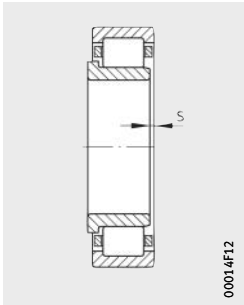

[2] Axial displacement “s” for NJ

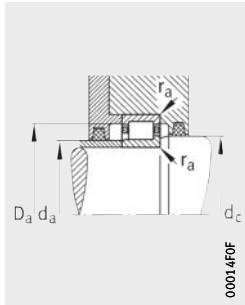

Mounting dimensions for NJ

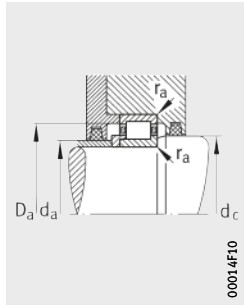

Mounting dimensions for NJ and HJ

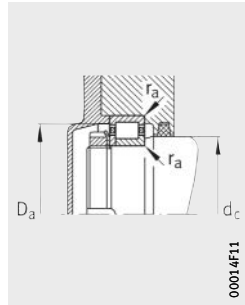

Mounting dimensions for NUP

			Mounting dimensions						Basic load ratings		Fatigue limit load	Limiting speed	Reference speed
B_1	B_2	B_3	d_a		d_c	D_a	r_a	r_{a1}	dyn. C_r	stat. C_{0r}	C_{ur}	n_G	n_B
			min.[1]	max.	min.	max.[1]	max.	max.	kN	kN	kN	min^{-1}	min^{-1}
–	–	–	154	183	208	316	4	4	865	1 020	114	3 200	1 900
18	32	–	154	183	208	316	4	4	865	1 020	114	3 200	1 900
–	–	14	154	183	208	316	4	4	865	1 020	114	3 200	1 900
–	–	–	164	195	222	336	4	4	930	1 120	123	3 000	1 800
18	33	–	164	195	222	336	4	4	930	1 120	123	3 000	1 800
–	–	15	164	195	222	336	4	4	930	1 120	123	3 000	1 800
–	–	–	167	190	213	303	3	3	900	930	126	3 600	1 940
15	25	–	167	190	213	303	3	3	900	930	126	3 600	1 940
–	–	–	167	190	213	303	3	3	900	930	126	3 600	1 940
15	25	–	167	190	213	303	3	3	900	930	126	3 600	1 940
–	–	–	167	190	213	303	3	3	900	930	126	3 600	2 000
15	25	–	167	190	213	303	3	3	900	930	126	3 600	2 000
–	–	–	167	190	213	303	3	3	900	930	126	3 600	2 000
15	25	–	167	190	213	303	3	3	900	930	126	3 600	2 000
–	–	10	167	190	213	303	3	3	900	930	126	3 600	1 940
–	–	10	167	190	213	303	3	3	900	930	126	3 600	1 940
–	–	10	167	190	213	303	3	3	900	930	126	3 600	2 000
–	–	10	167	190	213	303	3	3	900	930	126	3 600	2 000
–	–	–	167	190	213	303	3	3	1 380	1 600	226	3 200	1 460
15	31,5	–	167	190	213	303	3	3	1 380	1 600	226	3 200	1 460
–	–	–	167	190	213	303	3	3	1 380	1 600	226	3 200	1 460
15	31,5	–	167	190	213	303	3	3	1 380	1 600	226	3 200	1 460
–	–	–	167	190	213	303	3	3	1 380	1 600	226	3 200	1 460
15	31,5	–	167	190	213	303	3	3	1 380	1 600	226	3 200	1 460
–	–	16,5	167	190	213	303	3	3	1 380	1 600	226	3 200	1 460
–	–	16,5	167	190	213	303	3	3	1 380	1 600	226	3 200	1 460
–	–	–	174	210	237	356	4	4	980	1 220	132	2 800	1 600
20	36,5	–	174	210	237	356	4	4	980	1 220	132	2 800	1 600
–	–	16,5	174	210	237	356	4	4	980	1 220	132	2 800	1 600
–	–	–	177	200	228	323	3	3	865	1 060	114	3 000	1 770
15	25	–	177	200	228	323	3	3	865	1 060	114	3 000	1 770
–	–	–	177	200	228	323	3	3	865	1 060	114	3 000	1 770

Cylindrical roller bearings with cage

Single row
Semi-locating and locating bearings

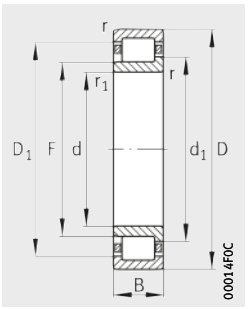

Design 1
NJ
Semi-locating bearing

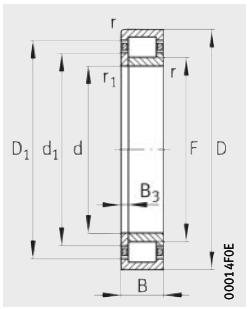

Design 1
NUP
Locating bearing

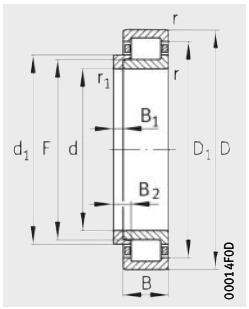

Design 1
NJ and HJ
Locating bearing

Dimension table (continued) · Dimensions in mm

Designation			De-sign	Mass m		Dimensions								
Bearing	X-life	L-section ring		Bearing ≈kg	L-section ring ≈kg	d	D	B	r min.	r_1 min.	$s^{2)}$	F	D_1 ≈	d_1 ≈
NJ332-E-M1A	–	**HJ332-E**	1	32,3	2,58	**160**	340	68	4	4	–	204	286	221,6
NUP332-E-M1	–	–	1	32,7	–	**160**	340	68	4	4	–	204	286	221,6
NUP332-E-M1A	–	–	1	32,7	–	**160**	340	68	4	4	–	204	286	221,6
NUP332-E-MP1A	–	–	1	33	–	**160**	340	68	4	4	–	204	286	221,6
NJ2332-E-M1	–	–	1	52,3	–	**160**	340	114	4	4	9,9	204	286	221,6
NJ2332-E-M1	–	**HJ2332-E**	1	52,3	2,85	**160**	340	114	4	4	–	204	286	221,6
NJ2332-E-M1A	–	–	1	52,3	–	**160**	340	114	4	4	9,9	204	286	221,6
NJ2332-E-M1A	–	**HJ2332-E**	1	52,3	2,85	**160**	340	114	4	4	–	204	286	221,6
NJ2332-E-MP1A	–	–	1	54,1	–	**160**	340	114	4	4	9,9	204	286	221,6
NJ2332-E-MP1A	–	**HJ2332-E**	1	54,1	2,85	**160**	340	114	4	4	–	204	286	221,6
NJ2332-E-MPA	–	–	1	54,9	–	**160**	340	114	4	4	9,9	204	286	221,6
NJ2332-E-MPA	–	**HJ2332-E**	1	54,9	2,85	**160**	340	114	4	4	–	204	286	221,6
NUP2332-E-M1	–	–	1	53,2	–	**160**	340	114	4	4	–	204	286	221,6
NUP2332-E-M1A	–	–	1	53,2	–	**160**	340	114	4	4	–	204	286	221,6
NUP2332-E-MPA	–	–	1	55,7	–	**160**	340	114	4	4	–	204	286	221,6
NJ432-M1	–	–	1	63	–	**160**	400	88	5	5	8,3	226	314,9	247,2
NJ432-M1	–	**HJ432**	1	63	5,33	**160**	400	88	5	5	–	226	314,9	247,2
NUP432-M1	–	–	1	64,1	–	**160**	400	88	5	5	–	226	314,9	247,2
NJ334-E-MPA	–	–	1	39	–	**170**	360	72	4	4	6	218	301,6	237
NJ334-E-MPA	–	**HJ334-E**	1	39	3,21	**170**	360	72	4	4	–	218	301,6	237
NUP334-E-MPA	–	–	1	39,6	–	**170**	360	72	4	4	–	218	301,6	237
NJ334-E-M1	–	–	1	38,6	–	**170**	360	72	4	4	6	218	301,6	237
NJ334-E-M1	–	**HJ334-E**	1	38,6	3,21	**170**	360	72	4	4	–	218	301,6	237
NUP334-E-M1	–	–	1	39,2	–	**170**	360	72	4	4	–	218	301,6	237
NJ2334-EX-M1	–	–	1	62,3	–	**170**	360	120	4	4	10,2	216	303	235,7
NJ2334-EX-M1	–	**HJ2334-EX**	1	62,3	3,5	**170**	360	120	4	4	–	216	303	235,7
NJ2334-EX-M1A	–	–	1	62,3	–	**170**	360	120	4	4	10,2	216	303	235,7
NJ2334-EX-M1A	–	**HJ2334-EX**	1	62,3	3,5	**170**	360	120	4	4	–	216	303	235,7
NJ2334-EX-MP1A	–	–	1	61,4	–	**170**	360	120	4	4	10,2	216	303	235,7
NJ2334-EX-MP1A	–	**HJ2334-EX**	1	61,4	3,5	**170**	360	120	4	4	–	216	303	235,7
NUP2334-EX-M1	–	–	1	62,9	–	**170**	360	120	4	4	–	216	303	235,7
NUP2334-EX-MP1A	–	–	1	62,3	–	**170**	360	120	4	4	–	216	303	235,7
NJ434-M1	–	–	1	72,3	–	**170**	420	92	5	5	8,7	239	329,9	261,2
NJ434-M1	–	**HJ434**	1	72,3	5,97	**170**	420	92	5	5	–	239	329,9	261,2
NUP434-M1	–	–	1	73,7	–	**170**	420	92	5	5	–	239	329,9	261,2

1) Under axial load, observe the dimensions D_1 and d_1.

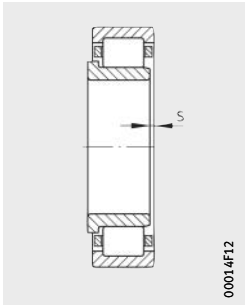

[2] Axial displacement “s” for NJ

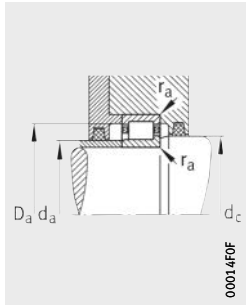

Mounting dimensions for NJ

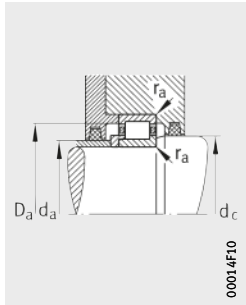

Mounting dimensions for NJ and HJ

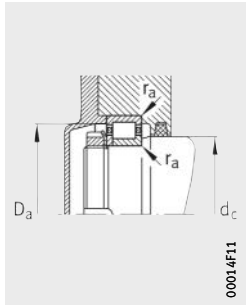

Mounting dimensions for NUP

			Mounting dimensions						Basic load ratings		Fatigue limit load	Limiting speed	Reference speed
B_1	B_2	B_3	d_a		d_c	D_a	r_a	r_{a1}	dyn. C_r	stat. C_{0r}	C_{ur}	n_G	n_B
			min.[1]	max.	min.	max.[1]	max.	max.	kN	kN	kN	min^{-1}	min^{-1}
15	25	–	177	200	228	323	3	3	865	1 060	114	3 000	1 770
–	–	10	177	200	228	323	3	3	865	1 060	114	3 000	1 770
–	–	10	177	200	228	323	3	3	865	1 060	114	3 000	1 770
–	–	10	177	200	228	323	3	3	865	1 060	114	3 000	1 800
–	–	–	177	200	228	323	3	3	1 320	1 830	204	3 000	1 340
15	32	–	177	200	228	323	3	3	1 320	1 830	204	3 000	1 340
–	–	–	177	200	228	323	3	3	1 320	1 830	204	3 000	1 340
15	32	–	177	200	228	323	3	3	1 320	1 830	204	3 000	1 340
–	–	–	177	200	228	323	3	3	1 320	1 830	204	3 000	1 300
15	32	–	177	200	228	323	3	3	1 320	1 830	204	3 000	1 300
–	–	–	177	200	228	323	3	3	1 320	1 830	204	3 000	1 300
15	32	–	177	200	228	323	3	3	1 320	1 830	204	3 000	1 300
–	–	17	177	200	228	323	3	3	1 320	1 830	204	3 000	1 300
–	–	17	177	200	228	323	3	3	1 320	1 830	204	3 000	1 300
–	–	17	177	200	228	323	3	3	1 320	1 830	204	3 000	1 300
–	–	–	184	223	252	376	4	4	1 060	1 320	142	2 800	1 500
20	37	–	184	223	252	376	4	4	1 060	1 320	142	2 800	1 500
–	–	17	184	223	252	376	4	4	1 060	1 320	142	2 800	1 500
–	–	–	187	215	240	343	3	3	915	1 140	123	3 000	1 700
16	27	–	187	215	240	343	3	3	915	1 140	123	3 000	1 700
–	–	11	187	215	240	343	3	3	915	1 140	123	3 000	1 700
–	–	–	187	215	240	343	3	3	965	1 220	132	3 000	1 610
16	27	–	187	215	240	343	3	3	965	1 220	132	3 000	1 610
16	33,5	–	187	214	238,3	343	3	3	1 500	2 080	230	2 800	1 210
–	–	–	187	214	238,3	343	3	3	1 500	2 080	230	2 800	1 210
16	33,5	–	187	214	238,3	343	3	3	1 500	2 080	230	2 800	1 210
–	–	–	187	214	238,3	343	3	3	1 500	2 080	230	2 800	1 210
16	33,5	–	187	214	238,3	343	3	3	1 500	2 080	230	2 800	1 210
–	–	17,5	187	214	238,3	343	3	3	1 500	2 080	231	2 800	1 200
16	33,5	–	187	214	238,3	343	3	3	1 500	2 080	230	2 800	1 210
–	–	17,5	187	214	238,3	343	3	3	1 500	2 080	231	2 800	1 200
–	–	17,5	187	214	238,3	343	3	3	1 500	2 080	231	2 800	1 200
–	–	–	194	236	266	396	4	4	1 120	1 400	151	2 800	1 500
20	38	–	194	236	266	396	4	4	1 120	1 400	151	2 800	1 500
–	–	18	194	236	266	396	4	4	1 120	1 400	151	2 800	1 500

Cylindrical roller bearings with cage

Single row
Semi-locating and locating bearings

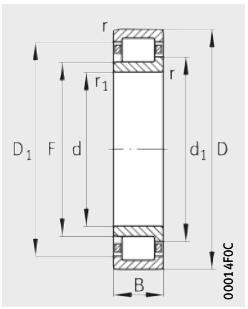

Design 1
NJ
Semi-locating bearing

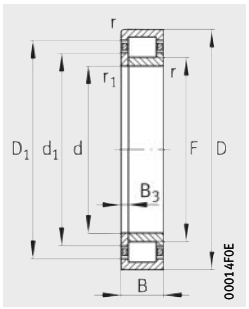

Design 1
NUP
Locating bearing

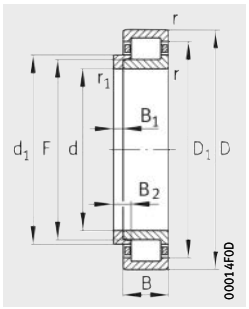

Design 1
NJ and HJ
Locating bearing

Dimension table (continued) · Dimensions in mm

Designation			De-sign	Mass m		Dimensions								
Bearing	X-life	L-section ring		Bearing ≈kg	L-section ring ≈kg	d	D	B	r min.	r_1 min.	s[2]	F	D_1 ≈	d_1 ≈
NJ236-E-M1	**XL**	–	1	19,2	–	**180**	320	52	4	4	4,7	217	278,6	230,2
NJ236-E-M1	**XL**	**HJ236-E**	1	19,2	1,76	**180**	320	52	4	4	–	217	278,6	230,2
NJ236-E-M1A	**XL**	–	1	19,2	–	**180**	320	52	4	4	4,7	217	278,6	230,2
NJ236-E-M1A	**XL**	**HJ236-E**	1	19,2	1,76	**180**	320	52	4	4	–	217	278,6	230,2
NJ236-E-MP1A	**XL**	–	1	19,1	–	**180**	320	52	4	4	4,7	217	278,6	230,2
NJ236-E-MP1A	**XL**	**HJ236-E**	1	19,1	1,76	**180**	320	52	4	4	–	217	278,6	230,2
NUP236-E-M1	**XL**	–	1	17,3	–	**180**	320	52	4	4	–	217	278,6	230,2
NUP236-E-M1A	**XL**	–	1	17,3	–	**180**	320	52	4	4	–	217	278,6	230,2
NUP236-E-MP1A	**XL**	–	1	19,4	–	**180**	320	52	4	4	–	217	278,6	230,2
NUP236-E-MPA	**XL**	–	1	19,4	–	**180**	320	52	4	4	–	217	278,6	230,2
NJ2236-E-M1	**XL**	–	1	31,1	–	**180**	320	86	4	4	7,2	215	280	229
NJ2236-E-M1	**XL**	**HJ2236-E**	1	31,1	1,87	**180**	320	86	4	4	–	215	280	229
NUP2236-E-M1	**XL**	–	1	31,6	–	**180**	320	86	4	4	–	215	280	229
NUP2236-E-M1A	**XL**	–	1	31,6	–	**180**	320	86	4	4	–	215	280	229
NUP2236-E-MP1A	**XL**	–	1	31,6	–	**180**	320	86	4	4	–	215	280	229
NUP2236-E-MPA	**XL**	–	1	31,3	–	**180**	320	86	4	4	–	215	280	229
NJ336-E-M1	–	–	1	44,6	–	**180**	380	75	4	4	6,1	231	319,8	250,5
NJ336-E-M1	–	**HJ336-E**	1	44,6	3,77	**180**	380	75	4	4	–	231	319,8	250,5
NJ336-E-M1A	–	–	1	44,6	–	**180**	380	75	4	4	6,1	231	319,8	250,5
NJ336-E-M1A	–	**HJ336-E**	1	44,6	3,77	**180**	380	75	4	4	–	231	319,8	250,5
NJ336-E-MP1A	–	–	1	44,6	–	**180**	380	75	4	4	6,1	231	319,8	250,5
NJ336-E-MP1A	–	**HJ336-E**	1	44,6	3,77	**180**	380	75	4	4	–	231	319,8	250,5
NUP336-E-M1	–	–	1	45,3	–	**180**	380	75	4	4	–	231	319,8	250,5
NUP336-E-M1A	–	–	1	45,3	–	**180**	380	75	4	4	–	231	319,8	250,5
NUP336-E-MPA	–	–	1	45,3	–	**180**	380	75	4	4	–	231	319,8	250,5
NJ2336-EX-M1	–	–	1	72,9	–	**180**	380	126	4	4	10,5	227	320,8	248
NJ2336-EX-M1	–	**HJ2336-EX**	1	72,9	4,05	**180**	380	126	4	4	–	227	320,8	248
NJ2336-EX-M1A	–	–	1	72,9	–	**180**	380	126	4	4	10,5	227	320,8	248
NJ2336-EX-M1A	–	**HJ2336-EX**	1	72,9	4,05	**180**	380	126	4	4	–	227	320,8	248
NJ2336-EX-MP1A	–	–	1	72	–	**180**	380	126	4	4	10,5	227	320,8	248
NJ2336-EX-MP1A	–	**HJ2336-EX**	1	72	4,05	**180**	380	126	4	4	–	227	320,8	248
NUP2336-EX-M1	–	–	1	74	–	**180**	380	126	4	4	–	227	320,8	248
NUP2336-EX-M1A	–	–	1	74	–	**180**	380	126	4	4	–	227	320,8	248
NUP2336-EX-MP1A	–	–	1	73,1	–	**180**	380	126	4	4	–	227	320,8	248
NUP2336-EX-MPA	–	–	1	73,1	–	**180**	380	126	4	4	–	227	320,8	248

[1] Under axial load, observe the dimensions D_1 and d_1.

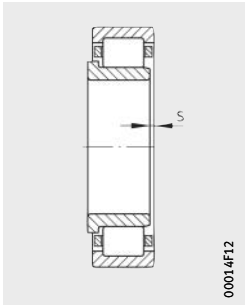

[2] Axial displacement “s” for NJ

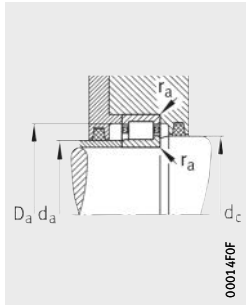

Mounting dimensions for NJ

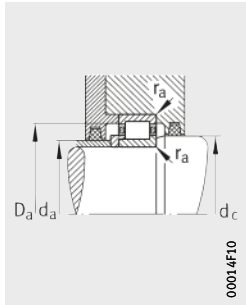

Mounting dimensions for NJ and HJ

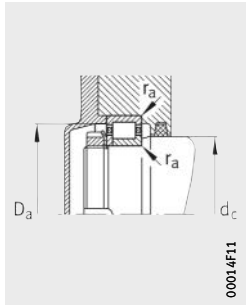

Mounting dimensions for NUP

			Mounting dimensions						Basic load ratings		Fatigue limit load	Limiting speed	Reference speed
B_1	B_2	B_3	d_a		d_c	D_a	r_a	r_{a1}	dyn. C_r	stat. C_{0r}	C_{ur}	n_G	n_B
			min.[1]	max.	min.	max.[1]	max.	max.	kN	kN	kN	min^{-1}	min^{-1}
–	–	–	197	214	233	303	3	3	730	830	112	3 600	1 850
12	20	–	197	214	233	303	3	3	730	830	112	3 600	1 850
–	–	–	197	214	233	303	3	3	730	830	112	3 600	1 850
12	20	–	197	214	233	303	3	3	730	830	112	3 600	1 850
–	–	–	197	214	233	303	3	3	730	830	112	3 600	1 900
12	20	–	197	214	233	303	3	3	730	830	112	3 600	1 900
–	–	8	197	214	233	303	3	3	730	830	112	3 600	1 850
–	–	8	197	214	233	303	3	3	730	830	112	3 600	1 850
–	–	8	197	214	233	303	3	3	730	830	112	3 600	1 900
–	–	8	197	214	233	303	3	3	730	830	112	3 600	1 900
–	–	–	197	214	233	303	3	3	1 180	1 490	208	3 200	1 380
12	24	–	197	214	233	303	3	3	1 180	1 490	208	3 200	1 380
–	–	12	197	214	233	303	3	3	1 180	1 490	208	3 200	1 380
–	–	12	197	214	233	303	3	3	1 180	1 490	208	3 200	1 380
–	–	12	197	214	233	303	3	3	1 180	1 490	208	3 200	1 400
–	–	12	197	214	233	303	3	3	1 180	1 490	208	3 200	1 400
–	–	–	197	228	254	363	3	3	1 040	1 320	141	2 800	1 500
17	28,5	–	197	228	254	363	3	3	1 040	1 320	141	2 800	1 500
–	–	–	197	228	254	363	3	3	1 040	1 320	141	2 800	1 500
17	28,5	–	197	228	254	363	3	3	1 040	1 320	141	2 800	1 500
–	–	–	197	228	254	363	3	3	1 040	1 320	141	2 800	1 500
17	28,5	–	197	228	254	363	3	3	1 040	1 320	141	2 800	1 500
–	–	11,5	197	228	254	363	3	3	1 040	1 320	141	2 800	1 500
–	–	11,5	197	228	254	363	3	3	1 040	1 320	141	2 800	1 500
–	–	11,5	197	228	254	363	3	3	1 040	1 320	141	2 800	1 500
–	–	–	197	225	250,6	363	3	3	1 660	2 320	260	2 800	1 120
17	35	–	197	225	250,6	363	3	3	1 660	2 320	260	2 800	1 120
–	–	–	197	225	250,6	363	3	3	1 660	2 320	260	2 800	1 120
17	35	–	197	225	250,6	363	3	3	1 660	2 320	260	2 800	1 120
–	–	–	197	225	250,6	363	3	3	1 660	2 320	260	2 800	1 100
17	35	–	197	225	250,6	363	3	3	1 660	2 320	260	2 800	1 100
–	–	18	197	225	250,6	363	3	3	1 660	2 320	260	2 800	1 100
–	–	18	197	225	25 0,6	363	3	3	1 660	2 320	260	2 800	1 100
–	–	18	197	225	25 0,6	363	3	3	1 660	2 320	260	2 800	1 100
–	–	18	197	225	25 0,6	363	3	3	1 660	2 320	260	2 800	1 100

Cylindrical roller bearings with cage

Single row
Semi-locating and locating bearings

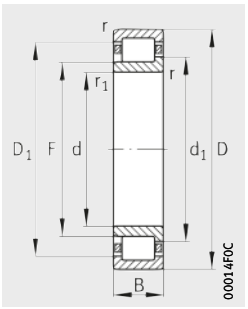

Design 1
NJ
Semi-locating bearing

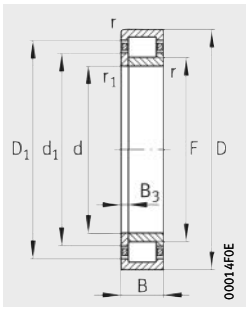

Design 1
NUP
Locating bearing

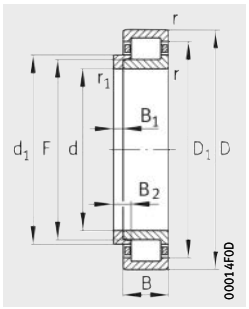

Design 1
NJ and HJ
Locating bearing

Dimension table (continued) · Dimensions in mm

Designation		De-sign	Mass m		Dimensions								
Bearing	L-section ring		Bearing ≈kg	L-section ring ≈kg	d	D	B	r min.	r_1 min.	$s^{2)}$	F	D_1 ≈	d_1 ≈
NJ238-E-M1	–	1	23,2	–	**190**	340	55	4	4	4,7	230	295	244
NJ238-E-M1	**HJ238-E**	1	23,2	2,17	**190**	340	55	4	4	–	230	295	244
NJ238-E-M1A	–	1	23,2	–	**190**	340	55	4	4	4,7	230	295	244
NJ238-E-M1A	**HJ238-E**	1	23,2	2,17	**190**	340	55	4	4	–	230	295	244
NUP238-E-M1	–	1	23,5	–	**190**	340	55	4	4	–	230	295	244
NJ2238-E-M1	–	1	37,7	–	**190**	340	92	4	4	8	228	296,4	242,7
NJ2238-E-M1	**HJ2238-E**	1	37,7	2,31	**190**	340	92	4	4	–	228	296,4	242,7
NUP2238-E-M1	–	1	38,3	–	**190**	340	92	4	4	–	228	296,4	242,7
NUP2238-E-M1A	–	1	38,3	–	**190**	340	92	4	4	–	228	296,4	242,7
NJ338-E-M1	–	1	51,4	–	**190**	400	78	5	5	6,3	245	336	265,4
NJ338-E-M1A	–	1	51,4	–	**190**	400	78	5	5	6,3	245	336	265,4
NUP338-E-M1	–	1	52,2	–	**190**	400	78	5	5	–	245	336	265,4
NUP338-E-M1A	–	1	52,2	–	**190**	400	78	5	5	–	245	336	265,4
NJ2338-EX-M1	–	1	84,4	–	**190**	400	132	5	5	11	240	340,5	262,5
NJ2338-EX-M1	**HJ2338-EX**	1	84,4	4,8	**190**	400	132	5	5	–	240	340,5	262,5
NJ2338-EX-MP1A	–	1	86,3	–	**190**	400	132	5	5	11	240	340,5	262,5
NJ2338-EX-MP1A	**HJ2338-EX**	1	86,3	4,8	**190**	400	132	5	5	–	240	340,5	262,5
NUP2338-EX-M1	–	1	85,7	–	**190**	400	132	5	5	–	240	340,5	262,5
NJ438-M1	–	1	71,2	–	**190**	460	98	6	6	9,4	165	361,9	289,2
NJ438-M1	**HJ438**	1	71,2	8,14	**190**	460	98	6	6	–	165	361,9	289,2
NJ240-E-M1	–	1	27,5	–	**200**	360	58	4	4	4,8	243	311,5	257,6
NJ240-E-M1	**HJ240-E**	1	27,5	2,62	**200**	360	58	4	4	–	243	311,5	257,6
NJ240-E-M1A	–	1	27,5	–	**200**	360	58	4	4	4,8	243	311,5	257,6
NJ240-E-M1A	**HJ240-E**	1	27,5	2,62	**200**	360	58	4	4	–	243	311,5	257,6
NJ240-E-MP1A	–	1	27,5	–	**200**	360	58	4	4	4,8	243	311,5	257,6
NJ240-E-MP1A	**HJ240-E**	1	27,5	2,62	**200**	360	58	4	4	–	243	311,5	257,6
NUP240-E-M1	–	1	28	–	**200**	360	58	4	4	–	243	311,5	257,6
NUP240-E-M1A	–	1	28	–	**200**	360	58	4	4	–	243	311,5	257,6
NUP240-E-MPA	–	1	27,9	–	**200**	360	58	4	4	–	243	311,5	257,6
NJ2240-E-M1	–	1	45,3	–	**200**	360	98	4	4	8,2	241	312,9	256,3
NJ2240-E-M1	**HJ2240-E**	1	45,3	2,78	**200**	360	98	4	4	–	241	312,9	256,3
NJ2240-E-M1A	–	1	45,3	–	**200**	360	98	4	4	8,2	241	312,9	256,3
NJ2240-E-M1A	**HJ2240-E**	1	45,3	2,78	**200**	360	98	4	4	–	241	312,9	256,3
NUP2240-E-M1	–	1	46	–	**200**	360	98	4	4	–	241	312,9	256,3
NUP2240-E-M1A	–	1	46	–	**200**	360	98	4	4	–	241	312,9	256,3

1) Under axial load, observe the dimensions D_1 and d_1.

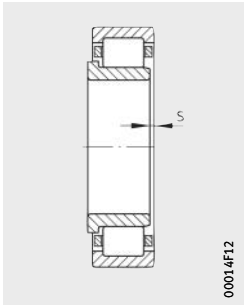

[2] Axial displacement “s” for NJ

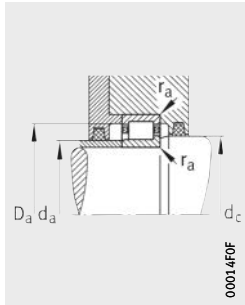

Mounting dimensions for NJ

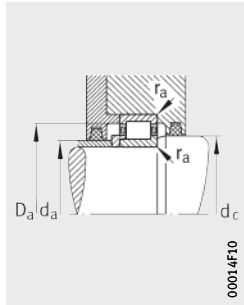

Mounting dimensions for NJ and HJ

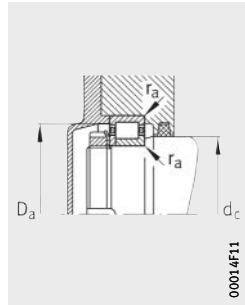

Mounting dimensions for NUP

			Mounting dimensions						Basic load ratings		Fatigue limit load	Limiting speed	Reference speed
B_1	B_2	B_3	d_a		d_c	D_a	r_a	r_{a1}	dyn. C_r	stat. C_{0r}	C_{ur}	n_G	n_B
			min.[1]	max.	min.	max.[1]	max.	max.	kN	kN	kN	min^{-1}	min^{-1}
–	–	–	207	227	247	323	3	3	680	930	100	3 200	1 720
13	21,5	–	207	227	247	323	3	3	680	930	100	3 200	1 720
–	–	–	207	227	247	323	3	3	680	930	100	3 200	1 720
13	21,5	–	207	227	247	323	3	3	680	930	100	3 200	1 720
–	–	8,5	207	227	247	323	3	3	680	930	100	3 200	1 720
–	–	–	207	227	247	323	3	3	1 100	1 660	184	3 000	1 290
13	26,5	–	207	227	247	323	3	3	1 100	1 660	184	3 000	1 290
–	–	13,5	207	227	247	323	3	3	1 100	1 660	183	3 000	1 290
–	–	13,5	207	227	247	323	3	3	1 100	1 660	183	3 000	1 290
–	–	–	210	242	269	380	4	4	1 120	1 430	151	2 800	1 400
–	–	–	210	242	269	380	4	4	1 120	1 430	151	2 800	1 400
–	–	12	210	242	269	380	4	4	1 120	1 430	151	2 800	1 400
–	–	12	210	242	269	380	4	4	1 120	1 430	151	2 800	1 400
–	–	–	210	237,8	265,3	380	4	4	1 900	2 650	285	2 600	1 010
18	36,5	–	210	237,8	265,3	380	4	4	1 900	2 650	285	2 600	1 010
–	–	–	210	237,8	265,3	380	4	4	1 900	2 650	285	2 600	1 000
18	36,5	–	210	237,8	265,3	380	4	4	1 900	2 650	285	2 600	1 000
–	–	18,8	210	237,8	265,3	380	4	4	1 900	2 650	285	2 600	1 000
–	–	–	220	262	294	430	5	5	1 340	1 760	181	2 600	1 200
23	42	–	220	262	294	430	5	5	1 340	1 760	181	2 600	1 200
–	–	–	217	240	261	343	3	3	750	1 040	110	3 000	1 600
14	23	–	217	240	261	343	3	3	750	1 040	110	3 000	1 600
–	–	–	217	240	261	343	3	3	750	1 040	110	3 000	1 600
14	23	–	217	240	261	343	3	3	750	1 040	110	3 000	1 600
–	–	–	217	240	261	343	3	3	750	1 040	110	3 000	1 600
14	23	–	217	240	261	343	3	3	750	1 040	110	3 000	1 600
–	–	9	217	240	261	343	3	3	750	1 040	110	3 000	1 600
–	–	9	217	240	261	343	3	3	750	1 040	110	3 000	1 600
–	–	9	217	240	261	343	3	3	750	1 040	110	3 000	1 600
–	–	–	217	240	261	343	3	3	1 220	1 860	206	2 800	1 180
14	28	–	217	240	261	343	3	3	1 220	1 860	206	2 800	1 180
–	–	–	217	240	261	343	3	3	1 220	1 860	206	2 800	1 180
14	28	–	217	240	261	343	3	3	1 220	1 860	206	2 800	1 180
–	–	14	217	240	261	343	3	3	1 220	1 860	205	2 800	1 200
–	–	14	217	240	261	343	3	3	1 220	1 860	205	2 800	1 200

Cylindrical roller bearings with cage

Single row
Semi-locating and locating bearings

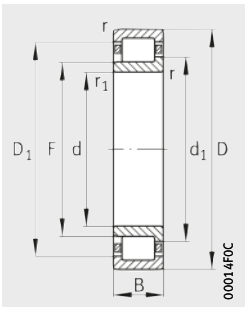

Design 1
NJ
Semi-locating bearing

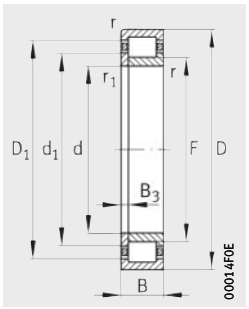

Design 1
NUP
Locating bearing

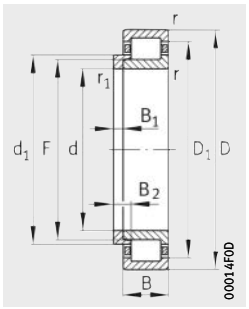

Design 1
NJ and HJ
Locating bearing

Dimension table (continued) · Dimensions in mm

Designation		De-sign	Mass m		Dimensions								
Bearing	L-section ring		Bearing ≈kg	L-section ring ≈kg	d	D	B	r min.	r_1 min.	$s^{2)}$	F	D_1 ≈	d_1 ≈
NUP2240-E-MP1A	–	1	45,6	–	**200**	360	98	4	4	–	241	312,9	256,3
NUP2240-E-MPA	–	1	45,6	–	**200**	360	98	4	4	–	241	312,9	256,3
NJ340-E-M1	–	1	58,1	–	**200**	420	80	5	5	6,3	258	351,8	279
NJ340-E-M1	**HJ340-E**	1	58,1	4,94	**200**	420	80	5	5	–	258	351,8	279
NJ340-E-M1A	–	1	58,1	–	**200**	420	80	5	5	6,3	258	351,8	279
NJ340-E-M1A	**HJ340-E**	1	58,1	4,94	**200**	420	80	5	5	–	258	351,8	279
NUP340-E-M1	–	1	59	–	**200**	420	80	5	5	–	258	351,8	279
NUP340-E-M1A	–	1	59	–	**200**	420	80	5	5	–	258	351,8	279
NJ2340-EX-M1	–	1	97,2	–	**200**	420	138	5	5	11,3	253	356,9	276,1
NJ2340-EX-M1	**HJ2340-EX**	1	97,2	5,28	**200**	420	138	5	5	–	253	356,9	276,1
NJ2340-EX-M1A	–	1	97,2	–	**200**	420	138	5	5	11,3	253	356,9	276,1
NJ2340-EX-M1A	**HJ2340-EX**	1	97,2	5,28	**200**	420	138	5	5	–	253	356,9	276,1
NUP2340-EX-M1	–	1	98,7	–	**200**	420	138	5	5	–	253	356,9	276,1
NUP2340-EX-M1A	–	1	98,7	–	**200**	420	138	5	5	–	253	356,9	276,1
NUP2340-EX-MP1A	–	1	97	–	**200**	420	138	5	5	–	253	356,9	276,1
NJ440-M1	–	1	104	–	**200**	480	102	6	6	9,4	276	378,9	301,1
NJ440-M1	**HJ440**	1	104	9,02	**200**	480	102	6	6	–	276	378,9	301,1
NJ1044-M1	–	1	20,9	–	**220**	340	56	3	3	6,2	250	298,9	261,7
NJ1044-M1	**HJ1044**	1	20,9	2,13	**220**	340	56	3	3	–	250	298,9	261,7
NJ1044-M1A	–	1	20,9	–	**220**	340	56	3	3	6,2	250	298,9	261,7
NJ1044-M1A	**HJ1044**	1	20,9	2,13	**220**	340	56	3	3	–	250	298,9	261,7
NJ244-E-M1	–	1	38,7	–	**220**	400	65	4	4	5,5	268	344,9	285,2
NJ244-E-M1	**HJ244-E**	1	38,7	3,55	**220**	400	65	4	4	–	268	344,9	285,2
NUP244-E-M1	–	1	39,3	–	**220**	400	65	4	4	–	268	344,9	285,2
NUP244-E-M1A	–	1	39,3	–	**220**	400	65	4	4	–	268	344,9	285,2
NJ2244-EX-M1	–	1	62,5	–	**220**	400	108	4	4	8,4	259	349,4	279,4
NJ2244-EX-M1	**HJ2244-EX**	1	62,5	3,58	**220**	400	108	4	4	–	259	349,4	279,4
NJ2244-EX-M1A	–	1	62,5	–	**220**	400	108	4	4	8,4	259	349,4	279,4
NJ2244-EX-M1A	**HJ2244-EX**	1	62,5	3,58	**220**	400	108	4	4	–	259	349,4	279,4
NJ2244-EX-MP1A	–	1	61,3	–	**220**	400	108	4	4	8,4	259	349,4	279,4
NJ2244-EX-MP1A	**HJ2244-EX**	1	61,3	3,58	**220**	400	108	4	4	–	259	349,4	279,4
NUP2244-EX-M1	–	1	63,4	–	**220**	400	108	4	4	–	259	349,4	279,4
NUP2244-EX-M1A	–	1	63,4	–	**220**	400	108	4	4	–	259	349,4	279,4
NUP2244-EX-MP1A	–	1	62,2	–	**220**	400	108	4	4	–	259	349,4	279,4
NJ344-E-M1	–	1	76,6	–	**220**	460	88	5	5	7	282	386	305,1

1) Under axial load, observe the dimensions D_1 and d_1.

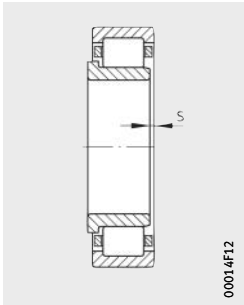

[2] Axial displacement “s” for NJ

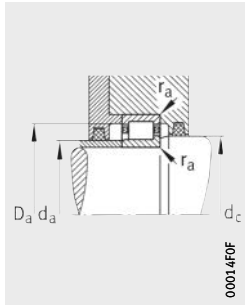

Mounting dimensions for NJ

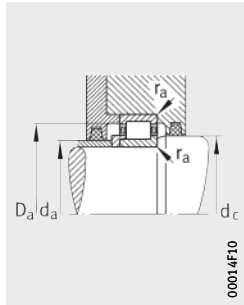

Mounting dimensions for NJ and HJ

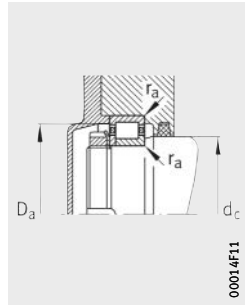

Mounting dimensions for NUP

			Mounting dimensions						Basic load ratings		Fatigue limit load	Limiting speed	Reference speed
B_1	B_2	B_3	d_a		d_c	D_a	r_a	r_{a1}	dyn. C_r	stat. C_{0r}	C_{ur}	n_G	n_B
			min.[1]	max.	min.	max.[1]	max.	max.	kN	kN	kN	min^{-1}	min^{-1}
–	–	14	217	240	261	343	3	3	1 220	1 860	205	2 800	1 200
–	–	14	217	240	261	343	3	3	1 220	1 860	205	2 800	1 200
–	–	–	220	255	282	400	4	4	1 180	1 530	161	2 600	1 320
18	30	–	220	255	282	400	4	4	1 180	1 530	161	2 600	1 320
–	–	–	220	255	282	400	4	4	1 180	1 530	161	2 600	1 320
18	30	–	220	255	282	400	4	4	1 180	1 530	161	2 600	1 320
–	–	12	220	255	282	400	4	4	1 180	1 530	161	2 600	1 300
–	–	12	220	255	282	400	4	4	1 180	1 530	161	2 600	1 300
–	–	–	220	250,7	279	400	4	4	2 040	2 900	310	2 400	940
18	37	–	220	250,7	279	400	4	4	2 040	2 900	310	2 400	940
–	–	–	220	250,7	279	400	4	4	2 040	2 900	310	2 400	940
18	37	–	220	250,7	279	400	4	4	2 040	2 900	310	2 400	940
–	–	19	220	250,7	279	400	4	4	2 040	2 900	310	2 400	950
–	–	19	220	250,7	279	400	4	4	2 040	2 900	310	2 400	950
–	–	19	220	250,7	279	400	4	4	2 040	2 900	310	2 400	950
–	–	–	230	273	306	450	5	5	1 460	1 860	190	2 400	1 200
24	43	–	230	273	306	450	5	5	1 460	1 860	190	2 400	1 200
–	–	–	232	248	265	328	2,5	2,5	510	765	80	3 200	2 000
14	27	–	232	248	265	328	2,5	2,5	510	765	80	3 200	2 000
–	–	–	232	248	265	328	2,5	2,5	510	765	80	3 200	2 000
14	27	–	232	248	265	328	2,5	2,5	510	765	80	3 200	2 000
–	–	–	237	265	288	383	3	3	950	1 320	134	2 800	1 380
15	25	–	237	265	288	383	3	3	950	1 320	134	2 800	1 380
–	–	10	237	265	288	383	3	3	950	1 320	135	2 800	1 380
–	–	10	237	265	288	383	3	3	950	1 320	135	2 800	1 380
–	–	–	237	256,7	282,3	383	3	3	1 630	2 360	250	2 600	1 000
15	29	–	237	256,7	282,3	383	3	3	1 630	2 360	250	2 600	1 000
–	–	–	237	256,7	282,3	383	3	3	1 630	2 360	250	2 600	1 000
15	29	–	237	256,7	282,3	383	3	3	1 630	2 360	250	2 600	1 000
–	–	–	237	256,7	282,3	383	3	3	1 630	2 360	250	2 600	1 000
15	29	–	237	256,7	282,3	383	3	3	1 630	2 360	250	2 600	1 000
–	–	14	237	256,7	282,3	383	3	3	1 630	2 360	250	2 600	1 000
–	–	14	237	256,7	282,3	383	3	3	1 630	2 360	250	2 600	1 000
–	–	14	237	256,7	282,3	383	3	3	1 630	2 360	250	2 600	1 000
–	–	–	240	279	308	440	4	4	1 430	1 900	192	2 400	1 140

Cylindrical roller bearings with cage

Single row
Semi-locating and locating bearings

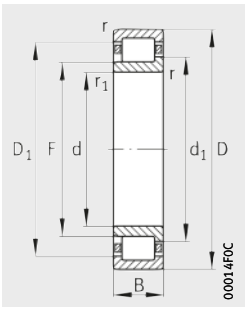

Design 1
NJ
Semi-locating bearing

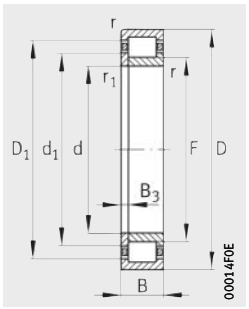

Design 1
NUP
Locating bearing

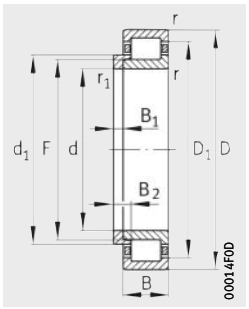

Design 1
NJ and HJ
Locating bearing

Dimension table (continued) · Dimensions in mm

Designation		De-sign	Mass m		Dimensions								
Bearing	L-section ring		Bearing ≈kg	L-section ring ≈kg	d	D	B	r min.	r_1 min.	$s^{2)}$	F	D_1 ≈	d_1 ≈
NUP344-E-M1	–	1	77,7	–	**220**	460	88	5	5	–	282	386	305,1
NJ2344-EX-M1	–	1	122	–	**220**	460	145	5	5	11,9	277	391,2	302,2
NJ2344-EX-M1	**HJ2344-EX**	1	122	6,93	**220**	460	145	5	5	–	277	391,2	302,2
NUP2344-EX-M1	–	1	124	–	**220**	460	145	5	5	–	277	391,2	302,2
NUP2344-EX-M1A	–	1	124	–	**220**	460	145	5	5	–	277	391,2	302,2
NJ444-M1	–	1	153	–	**220**	540	115	6	6	10	305	426,1	335,1
NJ444-M1	**HJ444**	1	153	12,4	**220**	540	115	6	6	–	305	426,1	335,1
NJ1948-MP1A	–	1	8,9	–	**240**	320	38	2,1	1,5	4,6	261	292,6	267,4
NJ1948-MP1A	**HJ1948**	1	8,9	1,2	**240**	320	38	2,1	1,5	–	261	292,6	267,4
NJ1048-M1	–	1	20,4	–	**240**	360	56	3	3	6,4	270	318,9	281,6
NJ1048-M1	**HJ1048**	1	20,4	2,29	**240**	360	56	3	3	–	270	318,9	281,6
NJ1048-M1A	–	1	20,4	–	**240**	360	56	3	3	6,4	270	318,9	281,6
NJ1048-M1A	**HJ1048**	1	20,4	2,29	**240**	360	56	3	3	–	270	318,9	281,6
NJ248-E-M1	–	1	52,5	–	**240**	440	72	4	4	6	293	376,6	312
NJ248-E-M1	**HJ248-E**	1	52,5	4,6	**240**	440	72	4	4	–	293	376,6	312
NUP248-E-M1	–	1	53,3	–	**240**	440	72	4	4	–	293	376,6	312
NUP248-E-M1A	–	1	53,3	–	**240**	440	72	4	4	–	293	376,6	312
NJ2248-EX-M1	–	1	84,2	–	**240**	440	120	4	4	10,2	287	380,7	308
NJ2248-EX-M1	**HJ2248-EX**	1	84,2	4,9	**240**	440	120	4	4	–	287	380,7	308
NJ2248-EX-M1A	–	1	84,2	–	**240**	440	120	4	4	10,2	287	380,7	308
NJ2248-EX-M1A	**HJ2248-EX**	1	84,2	4,9	**240**	440	120	4	4	–	287	380,7	308
NUP2248-EX-M1	–	1	85,6	–	**240**	440	120	4	4	–	287	380,7	308
NUP2248-EX-M1A	–	1	85,6	–	**240**	440	120	4	4	–	287	380,7	308
NJ348-E-M1	–	1	97	–	**240**	500	95	5	5	7,4	306	421,2	331,3
NJ348-E-M1	**HJ348-E**	1	97	8,3	**240**	500	95	5	5	–	306	421,2	331,3
NJ2348-EX-M1	–	1	154	–	**240**	500	155	5	5	13,3	303	424	329,6
NJ2348-EX-M1	**HJ2348-EX**	1	154	9,04	**240**	500	155	5	5	–	303	424	329,6
NUP2348-EX-M1	–	1	154	–	**240**	500	155	5	5	–	303	424	329,6
NJ448-M1	–	1	176	–	**240**	580	122	6	6	10,9	330	459,1	363,1
NJ448-M1	**HJ448**	1	176	15,6	**240**	580	122	6	6	–	330	459,1	363,1
NJ2852-M1	–	1	6,42	–	**260**	320	36	2	1,1	3,8	275	300,6	281,5
NUP2852-M1	–	1	6,51	–	**260**	320	36	2	1,1	–	275	300,6	280,6

1) Under axial load, observe the dimensions D_1 and d_1.

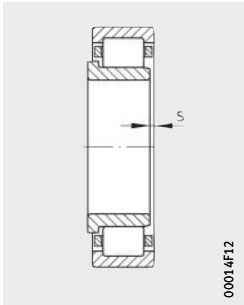

[2] Axial displacement “s” for NJ

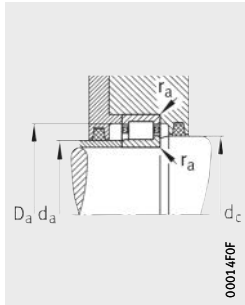

Mounting dimensions for NJ

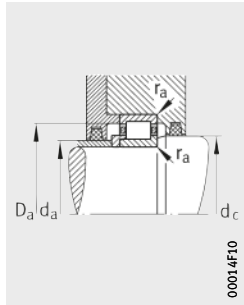

Mounting dimensions for NJ and HJ

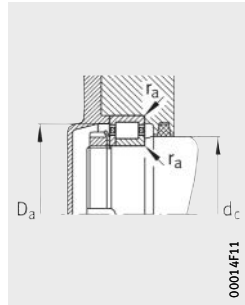

Mounting dimensions for NUP

			Mounting dimensions						Basic load ratings		Fatigue limit load	Limiting speed	Reference speed
B_1	B_2	B_3	d_a		d_c	D_a	r_a	r_{a1}	dyn. C_r	stat. C_{0r}	C_{ur}	n_G	n_B
			min.[1]	max.	min.	max.[1]	max.	max.	kN	kN	kN	min^{-1}	min^{-1}
–	–	13	240	279	308	440	4	4	1 430	1 900	192	2 400	1 100
–	–	–	240	276	306	440	4	4	2 360	3 350	340	2 200	830
20	40	–	240	276	306	440	4	4	2 360	3 350	340	2 200	830
–	–	20	240	274,7	305,1	440	4	4	2 360	3 350	340	2 200	830
–	–	20	240	274,7	305,1	440	4	4	2 360	3 350	340	2 200	830
–	–	–	250	302	340	510	5	5	1 960	2 550	249	2 200	950
26	46	–	250	302	340	510	5	5	1 960	2 550	249	2 200	950
–	–	–	248	258	272	309	2	1,5	330	490	50	3 800	–
12	21,5	–	248	258	272	309	2	1,5	330	490	50	3 800	–
–	–	–	252	268	285	348	2,5	2,5	540	850	74	3 000	1 800
14	27	–	252	268	285	348	2,5	2,5	540	850	74	3 000	1 800
–	–	–	252	268	285	348	2,5	2,5	540	850	64	3 000	1 800
14	27	–	252	268	285	348	2,5	2,5	540	850	64	3 000	1 800
–	–	–	257	290	315	423	3	3	1 140	1 600	163	2 600	1 220
16	27	–	257	290	315	423	3	3	1 140	1 600	163	2 600	1 220
–	–	11	257	290	315	423	3	3	1 140	1 600	163	2 600	1 200
–	–	11	257	290	315	423	3	3	1 140	1 600	163	2 600	1 200
–	–	–	257	284,5	311,1	423	3	3	1 830	2 800	290	2 400	900
16	33,5	–	257	284,5	311,1	423	3	3	1 830	2 800	290	2 400	900
–	–	–	257	284,5	311,1	423	3	3	1 830	2 800	290	2 400	900
16	33,5	–	257	284,5	311,1	423	3	3	1 830	2 800	290	2 400	900
–	–	17,5	257	284,5	311,1	423	3	3	1 830	2 800	290	2 400	900
–	–	17,5	257	284,5	311,1	423	3	3	1 830	2 800	290	2 400	900
–	–	–	260	303	335	480	4	4	1 730	2 280	221	2 200	1 000
22	35,5	–	260	303	335	480	4	4	1 730	2 280	221	2 200	1 000
–	–	–	260	300,5	332,7	480	4	4	2 600	3 750	375	2 000	750
22	44,5	–	260	300,5	332,7	480	4	4	2 600	3 750	375	2 000	750
–	–	22,5	260	300,5	332,7	480	4	4	2 600	3 750	375	2 000	750
–	–	–	270	327	368	550	5	5	2 240	2 900	275	1 900	850
28	49	–	270	327	368	550	5	5	2 240	2 900	275	1 900	850
–	–	–	269	272	284	311	2	1	380	690	72	3 200	1 400
–	–	6	269	272	284	311	2	1	380	690	72	3 200	1 400

Cylindrical roller bearings with cage

Single row
Semi-locating and locating bearings

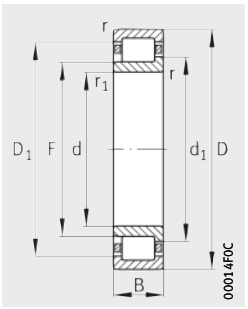

Design 1
NJ
Semi-locating bearing

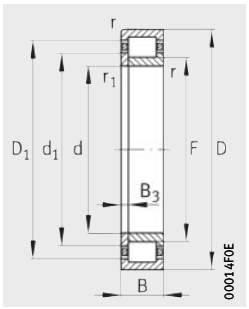

Design 1
NUP
Locating bearing

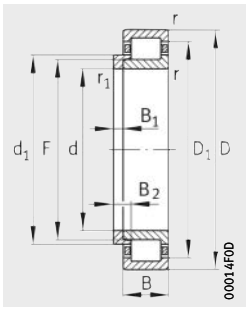

Design 1
NJ and HJ
Locating bearing

Dimension table (continued) · Dimensions in mm

Designation		De-sign	Mass m		Dimensions								
Bearing	L-section ring		Bearing ≈kg	L-section ring ≈kg	d	D	B	r min.	r_1 min.	$s^{2)}$	F	D_1 ≈	d_1 ≈
NJ1952-M1	–	1	14,2	–	**260**	360	46	2,1	1,5	5,3	286	324,4	–
NJ1952-M1	**HJ1952**	1	14,2	1,9	**260**	360	46	2,1	1,5	–	286	324,4	–
NJ1952-M1A	–	1	14,2	–	**260**	360	46	2,1	1,5	5,3	286	324,4	–
NJ1952-M1A	**HJ1952**	1	14,2	1,9	**260**	360	46	2,1	1,5	–	286	324,4	–
NJ1952-MPA	–	1	14,5	–	**260**	360	46	2,1	1,5	5,3	286	324,4	294
NJ1952-MPA	**HJ1952**	1	14,5	1,9	**260**	360	46	2,1	1,5	–	286	324,4	294
NJ1052-M1	–	1	30,4	–	**260**	400	65	4	4	7,2	296	351,3	309,1
NJ1052-M1	**HJ1052**	1	30,4	3,36	**260**	400	65	4	4	–	296	351,3	309,1
NJ1052-M1A	–	1	30,4	–	**260**	400	65	4	4	7,2	296	351,3	309,1
NJ1052-M1A	**HJ1052**	1	30,4	3,36	**260**	400	65	4	4	–	296	351,3	309,1
NJ1052-MP1A	–	1	29	–	**260**	400	65	4	4	7,2	296	351,3	309,1
NJ1052-MP1A	**HJ1052**	1	29	3,36	**260**	400	65	4	4	–	296	351,3	309,1
NUP1052-M1	–	1	31,2	–	**260**	400	65	4	4	–	296	351,3	309,1
NUP1052-M1A	–	1	31,5	–	**260**	400	65	4	4	–	296	351,3	309,1
NUP2052-E-M1	–	1	40,5	–	**260**	400	82	4	4	–	294	356,3	308
NUP2052-E-M1A	–	1	40,5	–	**260**	400	82	4	4	–	294	356,3	308
NJ252-E-M1	–	1	69,4	–	**260**	480	80	5	5	6,2	317	410,8	336,9
NJ252-E-M1	**HJ252-E**	1	69,4	5,92	**260**	480	80	5	5	–	317	410,8	336,9
NJ252-E-M1A	–	1	69,4	–	**260**	480	80	5	5	6,2	317	410,8	336,9
NJ252-E-M1A	**HJ252-E**	1	69,4	5,92	**260**	480	80	5	5	–	317	410,8	336,9
NJ2252-E-M1	–	1	110	–	**260**	480	130	5	5	10,5	313	413,6	335,6
NJ2252-E-M1	**HJ2252-E**	1	110	6,44	**260**	480	130	5	5	–	313	413,6	335,6
NJ2252-E-M1A	–	1	110	–	**260**	480	130	5	5	10,5	313	413,6	335,6
NJ2252-E-M1A	**HJ2252-E**	1	110	6,44	**260**	480	130	5	5	–	313	413,6	335,6
NUP2252-E-M1	–	1	112	–	**260**	480	130	5	5	–	313	413,6	335,6
NUP2252-E-M1A	–	1	112	–	**260**	480	130	5	5	–	313	413,6	335,6
NJ352-E-M1	–	1	122	–	**260**	540	102	6	6	10	337	454,6	362,9
NJ2352-EX-M1	–	1	192	–	**260**	540	165	6	6	13,7	324	458,4	353,5
NJ2352-EX-M1	**HJ2352-EX**	1	192	11	**260**	540	165	6	6	–	324	458,4	353,5
NJ2352-EX-M1A	–	1	192	–	**260**	540	165	6	6	13,7	324	458,4	353,5
NJ2352-EX-M1A	**HJ2352-EX**	1	192	11	**260**	540	165	6	6	–	324	458,4	353,5
NJ2352-EX-MPA	–	1	194	–	**260**	540	165	6	6	13,7	324	458,4	353,5
NJ2352-EX-MPA	**HJ2352-EX**	1	194	11	**260**	540	165	6	6	–	324	458,4	353,5
NUP2352-EX-M1	–	1	206	–	**260**	540	165	6	6	–	324	458,4	353,5
NUP2352-EX-M1A	–	1	206	–	**260**	540	165	6	6	–	324	458,4	353,5

1) Under axial load, observe the dimensions D_1 and d_1.

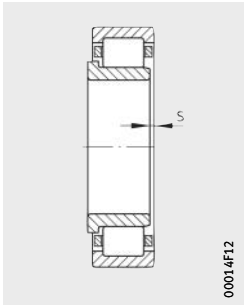

[2] Axial displacement “s” for NJ

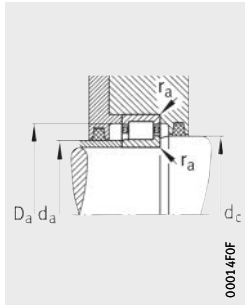

Mounting dimensions for NJ

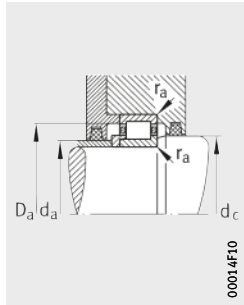

Mounting dimensions for NJ and HJ

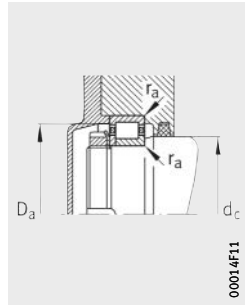

Mounting dimensions for NUP

			Mounting dimensions						Basic load ratings		Fatigue limit load	Limiting speed	Reference speed
B_1	B_2	B_3	d_a		d_c	D_a	r_a	r_{a1}	dyn. C_r	stat. C_{0r}	C_{ur}	n_G	n_B
			min.[1]	max.	min.	max.[1]	max.	max.	kN	kN	kN	min^{-1}	min^{-1}
–	–	–	268	283	299	349	2	2	425	735	56	3 000	–
14	25	–	268	283	299	349	2	2	425	735	56	3 000	–
–	–	–	268	283	299	349	2	2	425	735	56	3 000	–
14	25	–	268	283	299	349	2	2	425	735	56	3 000	–
–	–	–	268	283	299	349	2	2	425	735	73	3 000	–
14	25	–	268	283	299	349	2	2	425	735	73	3 000	–
–	–	–	275	292	312	385	3	3	655	1 020	105	2 800	1 700
16	31,5	–	275	292	312	385	3	3	655	1 020	105	2 800	1 700
–	–	–	275	292	312	385	3	3	655	1 020	105	2 800	1 700
16	31,5	–	275	292	312	385	3	3	655	1 020	105	2 800	1 700
–	–	–	275	292	312	385	3	3	655	1 020	105	2 800	1 700
16	31,5	–	275	292	312	385	3	3	655	1 020	105	2 800	1 700
–	–	15,5	275	292	312	385	3	3	655	1 020	104	2 800	1 700
–	–	15,5	275	292	312	385	3	3	655	1 020	104	2 800	1 700
–	–	10	275	291	314	385	3	3	1 200	2 080	216	2 600	1 200
–	–	10	275	291	314	385	3	3	1 200	2 080	216	2 600	1 200
–	–	–	280	314	341	460	4	4	1 340	1 900	191	2 400	1 110
18	30	–	280	314	341	460	4	4	1 340	1 900	191	2 400	1 110
–	–	–	280	314	341	460	4	4	1 340	1 900	191	2 400	1 110
18	30	–	280	314	341	460	4	4	1 340	1 900	191	2 400	1 110
–	–	–	280	310	339	460	4	4	2 160	3 350	340	2 200	780
18	35,5	–	280	310	339	460	4	4	2 160	3 350	340	2 200	780
–	–	–	280	310	339	460	4	4	2 160	3 350	340	2 200	780
18	35,5	–	280	310	339	460	4	4	2 160	3 350	340	2 200	780
–	–	17,5	280	310	339	460	4	4	2 160	3 350	340	2 200	800
–	–	17,5	280	310	339	460	4	4	2 160	3 350	340	2 200	800
–	–	–	286	334,3	366,2	514	5	5	1 900	2 600	249	2 000	900
–	–	–	286	321,3	356,8	514	5	5	3 100	4 500	435	1 800	670
24	46,5	–	286	321,3	356,8	514	5	5	3 100	4 500	435	1 800	670
–	–	–	286	321,3	356,8	514	5	5	3 100	4 500	435	1 800	670
24	46,5	–	286	321,3	356,8	514	5	5	3 100	4 500	435	1 800	670
–	–	–	286	321,3	356,8	514	5	5	3 100	4 500	435	1 800	670
24	46,5	–	286	321,3	356,8	514	5	5	3 100	4 500	435	1 800	670
–	–	22,5	286	321,3	356,8	514	5	5	3 100	4 500	435	1 800	670
–	–	22,5	286	321,3	356,8	514	5	5	3 100	4 500	435	1 800	670

Cylindrical roller bearings with cage

Single row
Semi-locating and locating bearings

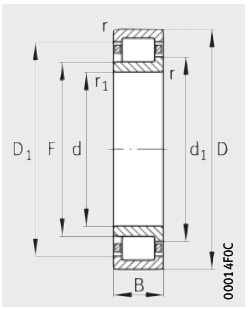

Design 1
NJ
Semi-locating bearing

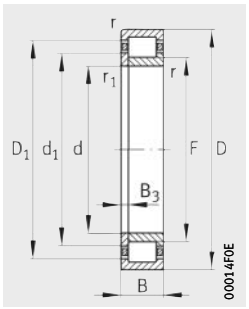

Design 1
NUP
Locating bearing

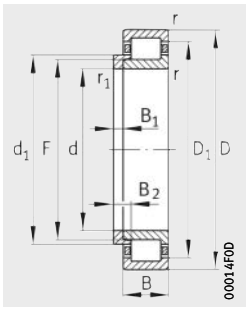

Design 1
NJ and HJ
Locating bearing

Dimension table (continued) · Dimensions in mm

Designation		De-sign	Mass m		Dimensions								
Bearing	L-section ring		Bearing ≈kg	L-section ring ≈kg	d	D	B	r min.	r_1 min.	$s^{2)}$	F	D_1 ≈	d_1 ≈
NJ1856-M1	–	1	7,26	–	**280**	350	33	2	1,1	4	299	327,1	304,8
NJ1856-M1	**HJ1856**	1	7,26	1,04	**280**	350	33	2	1,1	–	299	327,1	304,8
NJ2856-M1	–	1	9,22	–	**280**	350	42	2	2	5,3	299	327,1	304,8
NUP2856-M1	–	1	9,43	–	**280**	350	42	2	2	–	299	327,1	304,8
NJ1956-M1	–	1	15,3	–	**280**	380	46	2,1	1,5	5,2	306	345,4	314
NJ1956-M1	**HJ1956**	1	15,3	2,16	**280**	380	46	2,1	1,5	–	306	345,4	314
NJ1956-M1A	–	1	15,3	–	**280**	380	46	2,1	1,5	5,2	306	345,4	314
NJ1956-M1A	**HJ1956**	1	15,3	2,16	**280**	380	46	2,1	1,5	–	306	345,4	314
NJ2956-M1	–	1	20,5	–	**280**	380	60	2,1	1,5	6,9	306	346	314
NJ1056-M1	–	1	32,2	–	**280**	420	65	4	4	7,2	316	371,3	329,1
NJ1056-M1	**HJ1056**	1	32,2	3,59	**280**	420	65	4	4	–	316	371,3	329,1
NJ1056-M1A	–	1	32,2	–	**280**	420	65	4	4	7,2	316	371,3	329,1
NJ1056-M1A	**HJ1056**	1	32,2	3,59	**280**	420	65	4	4	–	316	371,3	329,1
NJ1056-MP1A	–	1	31,7	–	**280**	420	65	4	4	7,2	316	371,3	329,1
NJ1056-MP1A	**HJ1056**	1	32,2	3,59	**280**	420	65	4	4	–	316	371,3	329,1
NUP2056-E-M1	–	1	42,9	–	**280**	420	82	4	4	–	314	376,3	328
NUP2056-E-M1A	–	1	42,9	–	**280**	420	82	4	4	–	314	376,3	328
NJ256-E-M1	–	1	73,2	–	**280**	500	80	5	5	6,3	337	430,8	358,2
NJ256-E-M1	**HJ256-E**	1	73,2	6,51	**280**	500	80	5	5	–	337	430,8	358,2
NJ256-E-M1A	–	1	73,2	–	**280**	500	80	5	5	6,3	337	430,8	358,2
NJ256-E-M1A	**HJ256-E**	1	73,2	6,51	**280**	500	80	5	5	–	337	430,8	358,2
NUP256-E-M1	–	1	74,3	–	**280**	500	80	5	5	–	337	430,8	358,2
NUP256-E-M1A	–	1	74,3	–	**280**	500	80	5	5	–	337	430,8	358,2
NJ2256-E-M1	–	1	116	–	**280**	500	130	5	5	10,5	333	436	355,6
NJ2256-E-M1	**HJ2256-E**	1	116	6,85	**280**	500	130	5	5	–	333	436	355,6
NJ2256-E-M1A	–	1	116	–	**280**	500	130	5	5	10,5	333	436	355,6
NJ2256-E-M1A	**HJ2256-E**	1	116	6,85	**280**	500	130	5	5	–	333	436	355,6
NUP2256-E-M1	–	1	117	–	**280**	500	130	5	5	–	333	436	355,6
NUP2256-E-M1A	–	1	117	–	**280**	500	130	5	5	–	333	436	355,6
NJ356-E-M1	–	1	149	–	**280**	580	108	6	6	8,7	362	488	389,8
NJ356-E-M1	**HJ356-E**	1	149	13,7	**280**	580	108	6	6	–	362	488	389,8
NJ2356-EX-M1	–	1	237	–	**280**	580	175	6	6	13	351	493,8	382,3
NJ2356-EX-M1	**HJ2356-EX**	1	237	13,8	**280**	580	175	6	6	–	351	493,8	382,3

1) Under axial load, observe the dimensions D_1 and d_1.

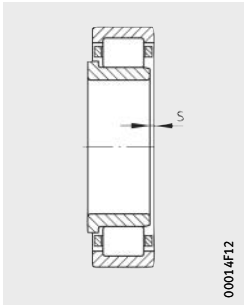

[2] Axial displacement “s” for NJ

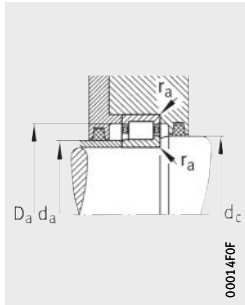

Mounting dimensions for NJ

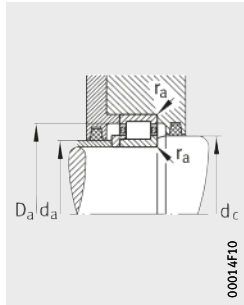

Mounting dimensions for NJ and HJ

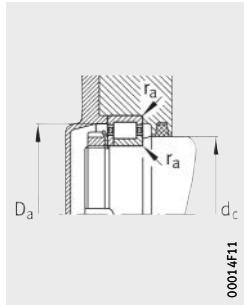

Mounting dimensions for NUP

			Mounting dimensions						Basic load ratings		Fatigue limit load	Limiting speed	Reference speed
B_1	B_2	B_3	d_a		d_c	D_a	r_a	r_{a1}	dyn. C_r	stat. C_{0r}	C_{ur}	n_G	n_B
			min.[1]	max.	min.	max.[1]	max.	max.	kN	kN	kN	min^{-1}	min^{-1}
–	–	–	289	296	308	341	2	1	255	500	48,5	3 200	–
10	18	–	289	296	308	341	2	1	255	500	48,5	3 200	–
–	–	–	289	296	308	341	2	1	345	735	74	3 000	1 400
–	–	9	289	296	308	341	2	1	345	735	75	3 000	1 400
–	–	–	288	303	319	369	2	1,5	440	800	78	2 800	–
15	26	–	288	303	319	369	2	1,5	440	800	78	2 800	–
–	–	–	288	303	319	369	2	1,5	440	800	78	2 800	–
15	26	–	288	303	319	369	2	1,5	440	800	78	2 800	–
–	–	–	288	303	319	370	2	1,5	620	1 220	126	2 800	1 300
–	–	–	295	312	333	405	3	3	680	1 100	112	2 800	1 500
16	31,5	–	295	312	333	405	3	3	680	1 100	112	2 800	1 500
–	–	–	295	312	333	405	3	3	680	1 100	112	2 800	1 500
16	31,5	–	295	312	333	405	3	3	680	1 100	112	2 800	1 500
–	–	–	295	312	333	405	3	3	695	1 140	116	2 800	1 500
16	31,5	–	295	312	333	405	3	3	680	1 100	112	2 800	1 500
–	–	10	295	311	334	405	3	3	1 220	2 160	223	2 600	1 100
–	–	10	295	311	334	405	3	3	1 220	2 160	223	2 600	1 100
–	–	–	300	334	362	480	4	4	1 400	2 000	201	2 200	1 020
18	30	–	300	334	362	480	4	4	1 400	2 000	201	2 200	1 020
–	–	–	300	334	362	480	4	4	1 400	2 000	201	2 200	1 020
18	30	–	300	334	362	480	4	4	1 400	2 000	201	2 200	1 020
–	–	12	300	334	362	480	4	4	1 400	2 000	200	2 200	1 000
–	–	12	300	334	362	480	4	4	1 400	2 000	200	2 200	1 000
–	–	–	300	330	359	480	4	4	2 280	3 600	360	2 000	720
18	35,5	–	300	330	359	480	4	4	2 280	3 600	360	2 000	720
–	–	–	300	330	359	480	4	4	2 280	3 600	360	2 000	720
18	35,5	–	300	330	359	480	4	4	2 280	3 600	360	2 000	720
–	–	17,5	300	330	359	480	4	4	2 280	3 600	360	2 000	700
–	–	17,5	300	330	359	480	4	4	2 280	3 600	360	2 000	700
–	–	–	306	359	393,4	554	5	5	2 160	3 050	285	1 900	790
26	42,5	–	306	359	393,4	554	5	5	2 160	3 050	285	1 900	790
–	–	–	306	348	385,9	554	5	5	3 550	5 200	495	1 600	600
26	48,5	–	306	348	385,9	554	5	5	3 550	5 200	495	1 600	600

Cylindrical roller bearings with cage

Single row
Semi-locating and locating bearings

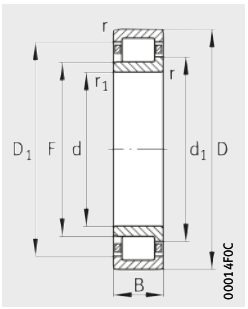

Design 1
NJ
Semi-locating bearing

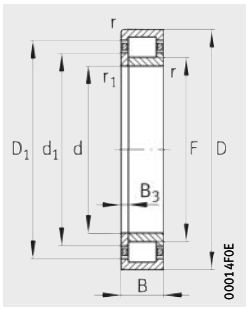

Design 1
NUP
Locating bearing

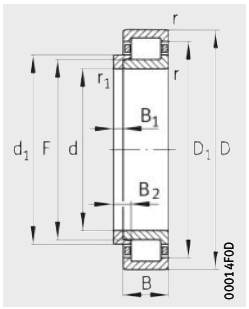

Design 1
NJ and HJ
Locating bearing

Dimension table (continued) · Dimensions in mm

Designation		De-sign	Mass m		Dimensions								
Bearing	L-section ring		Bearing ≈kg	L-section ring ≈kg	d	D	B	r min.	r_1 min.	$s^{2)}$	F	D_1 ≈	d_1 ≈
NJ1860-M1	–	1	10,2	–	**300**	380	38	2,1	1,5	4,3	322	355,2	328,7
NJ1860-M1	**HJ1860**	1	10,2	1,54	**300**	380	38	2,1	1,5	–	322	355,2	328,7
NJ1860-MPA	–	1	10	–	**300**	380	38	2,1	1,5	4,3	322	355,2	328,7
NJ1860-MPA	**HJ1860**	1	10	1,54	**300**	380	38	2,1	1,5	–	322	355,2	328,7
NJ2860-M1	–	1	13,1	–	**300**	380	48	2,1	1,5	5,3	322	355,2	328,7
NUP2860-M1	–	1	13,4	–	**300**	380	48	2,1	1,5	–	322	355,2	328,7
NJ1960-M1	–	1	24,2	–	**300**	420	56	3	3	6,5	330	378	340
NJ1960-M1	**HJ1960**	1	24,2	3,29	**300**	420	56	3	3	–	330	378	340
NJ1960-M1A	–	1	24,2	–	**300**	420	56	3	3	6,5	330	378	340
NJ1960-M1A	**HJ1960**	1	24,2	3,29	**300**	420	56	3	3	–	330	378	340
NJ1060-M1	–	1	45,7	–	**300**	460	74	4	4	11,9	340	405,2	355,7
NJ1060-M1	**HJ1060**	1	45,7	5,17	**300**	460	74	4	4	–	340	405,2	355,7
NJ1060-M1A	–	1	45,7	–	**300**	460	74	4	4	11,9	340	405,2	355,7
NJ1060-M1A	**HJ1060**	1	45,7	5,17	**300**	460	74	4	4	–	340	405,2	355,7
NJ1060-MP1A	–	1	44,6	–	**300**	460	74	4	4	11,9	340	405,2	355,7
NJ1060-MP1A	**HJ1060**	1	44,6	5,17	**300**	460	74	4	4	–	340	405,2	355,7
NUP2060-E-M1	–	1	61,5	–	**300**	460	95	4	4	–	341	409,9	356,3
NUP2060-E-M1A	–	1	61,5	–	**300**	460	95	4	4	–	341	409,9	356,3
NJ260-E-M1	–	1	91,6	–	**300**	540	85	5	5	6,9	364	464,6	385,6
NJ260-E-M1	**HJ260-E**	1	91,6	8,31	**300**	540	85	5	5	–	364	464,6	385,6
NJ260-E-M1A	–	1	91,6	–	**300**	540	85	5	5	6,9	364	464,6	385,6
NJ260-E-M1A	**HJ260-E**	1	91,6	8,31	**300**	540	85	5	5	–	364	464,6	385,6
NUP260-E-M1	–	1	92,8	–	**300**	540	85	5	5	–	364	464,6	385,6
NUP260-E-M1A	–	1	92,8	–	**300**	540	85	5	5	–	364	464,6	385,6
NJ2260-EX-M1	–	1	146	–	**300**	540	140	5	5	12,2	355	472,6	380,9
NJ2260-EX-M1	**HJ2260-E**	1	146	9,8	**300**	540	140	5	5	–	355	472,6	380,9
NUP2260-EX-M1	–	1	148	–	**300**	540	140	5	5	–	355	472,6	380,9
NJ1864-M1	–	1	11	–	**320**	400	38	2,1	1,5	4,3	341	373,8	347,7
NJ1864-M1	**HJ1864**	1	11	1,59	**320**	400	38	2,1	1,5	–	341	373,8	347,7
NJ1864-MP1A	–	1	10,8	–	**320**	400	38	2,1	1,5	4,3	341	373,8	347,7
NJ1864-MP1A	**HJ1864**	1	10,8	1,59	**320**	400	38	2,1	1,5	–	341	373,8	347,7
NUP1864-M1	–	1	11,3	–	**320**	400	38	2,1	1,5	–	341	373,8	347,7
NJ2864-M1	–	1	14,3	–	**320**	400	48	2,1	1,5	5,3	341	373,8	347,7
NUP2864-M1	–	1	14,6	–	**320**	400	48	2,1	1,5	–	341	373,8	347,7
NJ1964-M1	–	1	25,6	–	**320**	440	56	3	3	6,2	350	398	360

1) Under axial load, observe the dimensions D_1 and d_1.

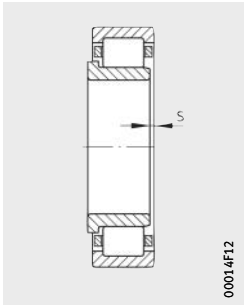

[2] Axial displacement “s” for NJ

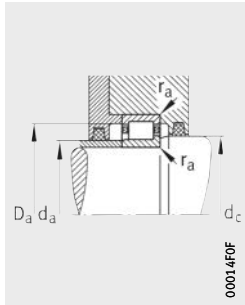

Mounting dimensions for NJ

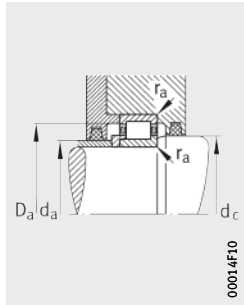

Mounting dimensions for NJ and HJ

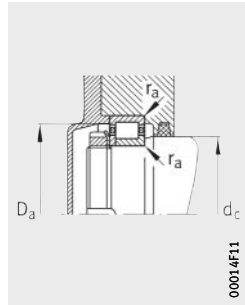

Mounting dimensions for NUP

			Mounting dimensions						Basic load ratings		Fatigue limit load	Limiting speed	Reference speed
B_1	B_2	B_3	d_a		d_c	D_a	r_a	r_{a1}	dyn. C_r	stat. C_{0r}	C_{ur}	n_G	n_B
			min.[1]	max.	min.	max.[1]	max.	max.	kN	kN	kN	min^{-1}	min^{-1}
–	–	–	310	319	332	370	2	1,5	335	640	62	2 800	–
12	21	–	310	319	332	370	2	1,5	335	640	62	2 800	–
–	–	–	310	319	332	370	2	1,5	335	640	62	2 800	–
12	21	–	310	319	332	370	2	1,5	335	640	62	2 800	–
–	–	–	310	319	332	370	2	1,5	475	1 000	101	2 800	1 200
–	–	9	310	319	332	370	2	1,5	475	1 000	101	2 800	1 200
–	–	–	312	327	345	408	2,5	2,5	600	1 020	99	2 800	–
18	31	–	312	327	345	408	2,5	2,5	600	1 020	99	2 800	–
–	–	–	312	327	345	408	2,5	2,5	600	1 020	99	2 800	–
18	31	–	312	327	345	408	2,5	2,5	600	1 020	99	2 800	–
–	–	–	315	336	359	445	3	3	900	1 430	139	2 400	1 400
19	36	–	315	336	359	445	3	3	900	1 430	139	2 400	1 400
–	–	–	315	336	359	445	3	3	900	1 430	139	2 400	1 400
19	36	–	315	336	359	445	3	3	900	1 430	139	2 400	1 400
–	–	–	315	336	359	445	3	3	900	1 430	139	2 400	1 400
19	36	–	315	336	359	445	3	3	900	1 430	139	2 400	1 400
–	–	12,5	315	338	363	445	3	3	1 500	2 700	275	2 200	950
–	–	12,5	315	338	363	445	3	3	1 500	2 700	275	2 200	950
–	–	–	320	359	390	520	4	4	1 600	2 320	225	2 000	920
20	32,5	–	320	359	390	520	4	4	1 600	2 320	225	2 000	920
–	–	–	320	359	390	520	4	4	1 600	2 320	225	2 000	920
20	32,5	–	320	359	390	520	4	4	1 600	2 320	225	2 000	920
–	–	12,5	320	359	390	520	4	4	1 600	2 320	224	2 000	950
–	–	12,5	320	359	390	520	4	4	1 600	2 320	224	2 000	950
–	–	–	320	352	384,7	520	4	4	2 700	4 150	395	1 900	630
20	40	–	320	352	384,7	520	4	4	2 700	4 150	395	1 900	630
–	–	20	320	352	384,7	520	4	4	2 700	4 150	395	1 900	630
–	–	–	330	338	352	390	2	1,5	345	695	66	2 800	–
12	21	–	330	338	352	390	2	1,5	345	695	66	2 800	–
–	–	–	330	338	352	390	2	1,5	345	695	66	2 800	–
12	21	–	330	338	352	390	2	1,5	345	695	66	2 800	–
–	–	9	330	338	352	390	2	1,5	345	695	66	2 800	–
–	–	–	330	338	352	390	2	1,5	490	1 080	107	2 800	1 100
–	–	9	330	338	352	390	2	1,5	490	1 080	107	2 800	1 100
–	–	–	332	346	365	428	2,5	2,5	620	1 100	104	2 600	–

Cylindrical roller bearings with cage

Single row
Semi-locating and locating bearings

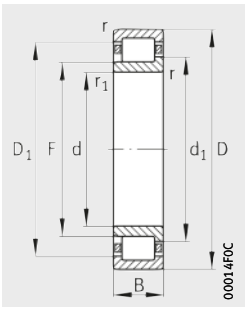

Design 1
NJ
Semi-locating bearing

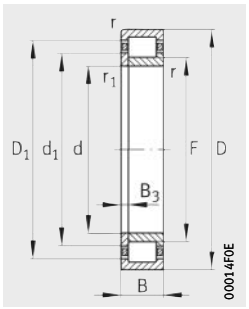

Design 1
NUP
Locating bearing

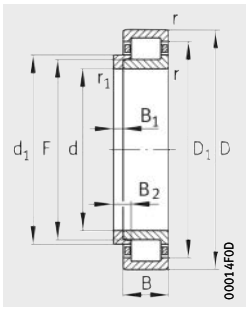

Design 1
NJ and HJ
Locating bearing

Dimension table (continued) · Dimensions in mm

Designation		De-sign	Mass m		Dimensions								
Bearing	L-section ring		Bearing ≈kg	L-section ring ≈kg	d	D	B	r min.	r_1 min.	$s^{2)}$	F	D_1 ≈	d_1 ≈
NJ1964-M1	**HJ1964**	1	25,6	3,5	**320**	440	56	3	3	–	350	398	360
NJ1964-M1A	–	1	25,6	–	**320**	440	56	3	3	6,2	350	398	360
NJ1964-M1A	**HJ1964**	1	25,6	3,5	**320**	440	56	3	3	–	350	398	360
NJ1064-M1	–	1	48,1	–	**320**	480	74	4	4	8	360	425,1	375,4
NJ1064-M1	**HJ1064**	1	48,1	5,48	**320**	480	74	4	4	–	360	425,1	375,4
NJ1064-M1A	–	1	48,1	–	**320**	480	74	4	4	8	360	425,1	375,4
NJ1064-M1A	**HJ1064**	1	48,1	5,48	**320**	480	74	4	4	–	360	425,1	375,4
NJ1064-MP1A	–	1	47	–	**320**	480	74	4	4	8	360	425,1	375,4
NJ1064-MP1A	**HJ1064**	1	47	5,48	**320**	480	74	4	4	–	360	425,1	375,4
NUP1064-M1	–	1	49,3	–	**320**	480	74	4	4	–	360	425,1	375,4
NJ264-EX-M1	–	1	115	–	**320**	580	92	5	5	7,5	392	499,4	415,8
NJ264-EX-M1	**HJ264-E**	1	115	10,1	**320**	580	92	5	5	–	392	499,4	415,8
NJ264-EX-M1A	–	1	115	–	**320**	580	92	5	5	7,5	392	499,4	415,8
NJ264-EX-M1A	**HJ264-E**	1	115	10,1	**320**	580	92	5	5	–	392	499,4	415,8
NUP264-EX-M1	–	1	117	–	**320**	580	92	5	5	–	392	499,4	415,8
NUP264-EX-M1A	–	1	117	–	**320**	580	92	5	5	–	392	499,4	415,8
NJ2264-EX-M1	–	1	183	–	**320**	580	150	5	5	11,9	380	506	407,8
NJ2264-EX-M1	**HJ2264-EX**	1	183	10,8	**320**	580	150	5	5	–	380	506	407,8
NUP2264-EX-M1	–	1	237	–	**320**	580	150	5	5	–	380	506	407,8
NJ364-E-M1	–	1	216	–	**320**	670	112	7,5	7,5	8,9	420	554	450
NJ1868-M1	–	1	11,6	–	**340**	420	38	2,1	1,5	4,3	361,5	394,7	368,2
NJ1868-M1	**HJ1868**	1	11,6	1,71	**340**	420	38	2,1	1,5	–	361,5	394,7	368,2
NJ1868-M1A	–	1	11,6	–	**340**	420	38	2,1	1,5	4,3	361,5	394,7	368,2
NJ1868-M1A	**HJ1868**	1	11,6	1,71	**340**	420	38	2,1	1,5	–	361,5	394,7	368,2
NJ2868-M1	–	1	15,3	–	**340**	420	48	2,1	1,5	5,3	361,5	394,7	368,2
NUP2868-M1	–	1	15,6	–	**340**	420	48	2,1	1,5	–	361,5	394,7	368,2
NJ1968-E-M1	–	1	26,9	–	**340**	460	56	3	3	5,7	370	423,3	380,7
NJ1968-E-M1	**HJ1968-E**	1	26,9	4,09	**340**	460	56	3	3	–	370	423,3	380,7
NJ1968-E-M1A	–	1	26,9	–	**340**	460	56	3	3	5,7	370	423,3	380,7
NJ1968-E-M1A	**HJ1968-E**	1	26,9	4,09	**340**	460	56	3	3	–	370	423,3	380,7
NUP1968-E-MP1A	–	1	27,1	–	**340**	460	56	3	3	–	370	423,3	380,7
NJ2968-M1	–	1	35,1	–	**340**	460	72	3	3	7	370	418	380
NJ2968-M1	**HJ2968**	1	35,1	4,02	**340**	460	72	3	3	–	370	418	380
NJ2968-M1A	–	1	35,1	–	**340**	460	72	3	3	7	370	418	380
NJ2968-M1A	**HJ2968**	1	35,1	4,02	**340**	460	72	3	3	–	370	418	380

1) Under axial load, observe the dimensions D_1 and d_1.

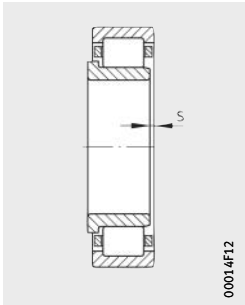

[2] Axial displacement “s” for NJ

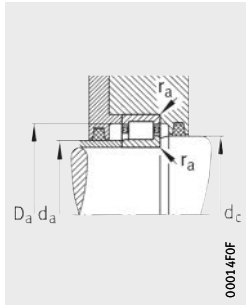

Mounting dimensions for NJ

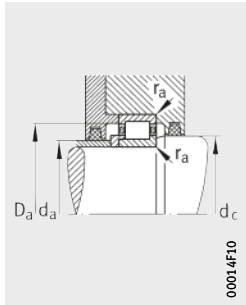

Mounting dimensions for NJ and HJ

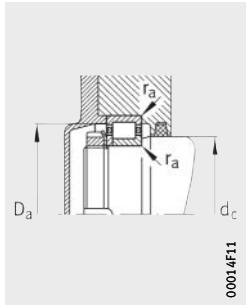

Mounting dimensions for NUP

			Mounting dimensions						Basic load ratings		Fatigue limit load	Limiting speed	Reference speed
B_1	B_2	B_3	d_a		d_c	D_a	r_a	r_{a1}	dyn. C_r	stat. C_{0r}	C_{ur}	n_G	n_B
			min.[1]	max.	min.	max.[1]	max.	max.	kN	kN	kN	min^{-1}	min^{-1}
18	31	–	332	346	365	428	2,5	2,5	620	1 100	104	2 600	–
–	–	–	332	346	365	428	2,5	2,5	620	1 100	104	2 600	–
18	31	–	332	346	365	428	2,5	2,5	620	1 100	104	2 600	–
–	–	–	335	356	380	465	3	3	915	1 500	143	2 400	1 300
19	36	–	335	356	380	465	3	3	915	1 500	143	2 400	1 300
–	–	–	335	356	380	465	3	3	915	1 500	143	2 400	1 300
19	36	–	335	356	380	465	3	3	915	1 500	143	2 400	1 300
–	–	–	335	356	380	465	3	3	915	1 500	143	2 400	1 300
19	36	–	335	356	380	465	3	3	915	1 500	143	2 400	1 300
–	–	17	335	356	380	465	3	3	915	1 500	144	2 400	1 300
–	–	–	340	388,5	419,6	560	4	4	1 800	2 700	255	1 900	850
21	35	–	340	388,5	419,6	560	4	4	1 800	2 700	255	1 900	850
–	–	–	340	388,5	419,6	560	4	4	1 800	2 700	255	1 900	850
21	35	–	340	388,5	419,6	560	4	4	1 800	2 700	255	1 900	850
–	–	14	340	388,5	419,6	560	4	4	1 800	2 700	255	1 900	850
–	–	14	340	388,5	419,6	560	4	4	1 800	2 700	255	1 900	850
–	–	–	340	376,5	411,7	560	4	4	3 150	4 900	460	1 600	570
21	41	–	340	376,5	411,7	560	4	4	3 150	4 900	460	1 600	570
–	–	20	340	376,5	411,7	560	4	4	3 150	4 900	460	1 600	560
–	–	–	352	415	455	638	6	6	2 550	3 750	330	1 600	650
–	–	–	350	358	373	410	2,1	2,1	360	735	69	2 800	–
12	21	–	350	358	373	410	2,1	2,1	360	735	69	2 800	–
–	–	–	350	358	373	410	2,1	2,1	360	735	69	2 800	–
12	21	–	350	358	373	410	2,1	2,1	360	735	69	2 800	–
–	–	–	350	358	372	410	2	1,5	510	1 140	112	2 600	1 100
–	–	9	350	358	372	410	2	1,5	510	1 140	112	2 600	1 100
–	–	–	352	366	385,4	446	2,5	2,5	695	1 250	118	2 400	–
20	32	–	352	366	385,4	446	2,5	2,5	695	1 250	118	2 400	–
–	–	–	352	366	385,4	446	2,5	2,5	695	1 250	118	2 400	–
20	32	–	352	366	385,4	446	2,5	2,5	695	1 250	118	2 400	–
–	–	12	352	366	385,4	446	2,5	2,5	695	1 250	118	2 400	–
–	–	–	352	366	385	448	2,5	2,5	950	1 930	190	2 400	950
20	32	–	352	366	385	448	2,5	2,5	950	1 930	190	2 400	950
–	–	–	352	366	385	448	2,5	2,5	950	1 930	190	2 400	950
20	32	–	352	366	385	448	2,5	2,5	950	1 930	190	2 400	950

Cylindrical roller bearings with cage

Single row
Semi-locating and locating bearings

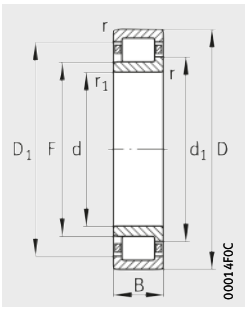

Design 1
NJ
Semi-locating bearing

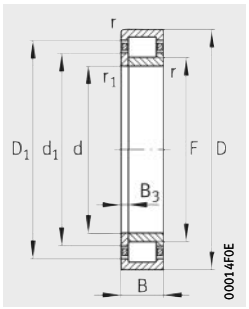

Design 1
NUP
Locating bearing

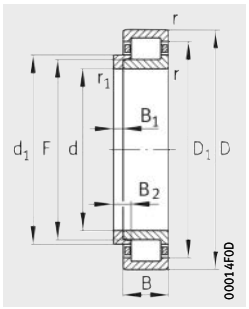

Design 1
NJ and HJ
Locating bearing

Dimension table (continued) · Dimensions in mm

Designation		De-sign	Mass m		Dimensions								
Bearing	L-section ring		Bearing ≈kg	L-section ring ≈kg	d	D	B	r min.	r_1 min.	$s^{2)}$	F	D_1 ≈	d_1 ≈
NJ1068-MPA	–	1	66,6	–	**340**	520	82	5	5	8,9	385	458,2	402,2
NJ1068-MPA	**HJ1068**	1	66,6	7,22	**340**	520	82	5	5	–	385	458,2	402,2
NJ1068-M1	–	1	64,7	–	**340**	520	82	5	5	8,9	385	458,2	402,2
NJ1068-M1	**HJ1068**	1	64,7	7,22	**340**	520	82	5	5	–	385	458,2	402,2
NJ1068-M1A	–	1	64,7	–	**340**	520	82	5	5	8,9	385	458,2	402,2
NJ1068-M1A	**HJ1068**	1	64,7	7,22	**340**	520	82	5	5	–	385	458,2	402,2
NJ268-E-M1	–	1	135	–	**340**	620	92	6	6	7,4	419	526,4	442,9
NJ268-E-M1	**HJ268-E**	1	135	12,5	**340**	620	92	6	6	–	419	526,4	442,9
NJ1872-M1	–	1	17,9	–	**360**	440	38	2,1	1,5	4,3	421	414,7	388,2
NJ1872-M1	**HJ1872**	1	17,9	1,8	**360**	440	38	2,1	1,5	–	421	414,7	388,2
NJ2872-M1	–	1	15,7	–	**360**	440	48	2,1	1,5	5,4	381,5	414,7	388,2
NUP2872-M1	–	1	16	–	**360**	440	48	2,1	1,5	–	381,5	414,7	388,2
NJ1972-M1	–	1	28,3	–	**360**	480	56	3	3	6,2	390	438,5	400
NJ1972-M1	**HJ1972**	1	28,3	4,28	**360**	480	56	3	3	–	390	438,5	400
NJ1972-M1A	–	1	28,3	–	**360**	480	56	3	3	6,2	390	438,5	400
NJ1972-M1A	**HJ1972**	1	28,3	4,28	**360**	480	56	3	3	–	390	438,5	400
NUP1972-M1A	–	1	29	–	**360**	480	56	3	3	–	390	438,5	400
NJ1072-M1	–	1	67,5	–	**360**	540	82	5	5	8,9	405	478,1	421,6
NJ1072-M1	**HJ1072**	1	67,5	7,38	**360**	540	82	5	5	–	405	478,1	421,6
NJ1072-M1A	–	1	67,5	–	**360**	540	82	5	5	8,9	405	478,1	421,6
NJ1072-M1A	**HJ1072**	1	67,5	7,38	**360**	540	82	5	5	–	405	478,1	421,6
NJ1072-MP1A	–	1	65,8	–	**360**	540	82	5	5	8,9	405	478,1	421,6
NJ1072-MP1A	**HJ1072**	1	65,8	7,38	**360**	540	82	5	5	–	405	478,1	421,6
NUP1072-M1	–	1	69,1	–	**360**	540	82	5	5	–	405	478,1	421,6
NUP2072-E-M1	–	1	91,5	–	**360**	540	106	5	5	–	405	483,8	422,7
NUP2072-E-M1A	–	1	91,5	–	**360**	540	106	5	5	–	405	483,8	422,7
NUP2072-E-MP1A	–	1	90	–	**360**	540	106	5	5	–	405	483,8	422,7
NUP2072-E-MPA	–	1	90	–	**360**	540	106	5	5	–	405	483,8	422,7
NJ272-E-M1	–	1	151	–	**360**	650	95	6	6	9,5	451	558,5	475
NJ272-E-M1	**HJ272-E**	1	151	14,9	**360**	650	95	6	6	–	451	558,5	475
NJ2272-E-M1	–	1	258	–	**360**	650	170	6	6	15	428	562	457,5

1) Under axial load, observe the dimensions D_1 and d_1.

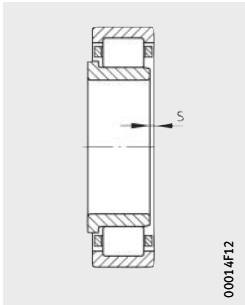

[2] Axial displacement “s” for NJ

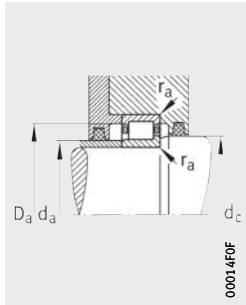

Mounting dimensions for NJ

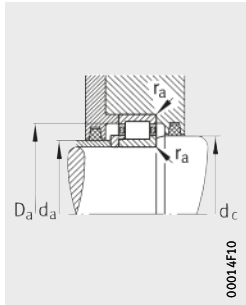

Mounting dimensions for NJ and HJ

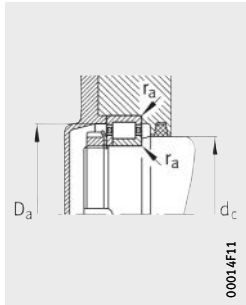

Mounting dimensions for NUP

			Mounting dimensions						Basic load ratings		Fatigue limit load	Limiting speed	Reference speed
B_1	B_2	B_3	d_a		d_c	D_a	r_a	r_{a1}	dyn. C_r	stat. C_{0r}	C_{ur}	n_G	n_B
			min.[1]	max.	min.	max.[1]	max.	max.	kN	kN	kN	min^{-1}	min^{-1}
–	–	–	357	381	407	503	4	4	1 080	1 760	163	2 200	1 200
21	39,5	–	357	381	407	503	4	4	1 080	1 760	163	2 200	1 200
–	–	–	357	381	407	503	4	4	1 120	1 830	169	2 200	1 200
21	39,5	–	357	381	407	503	4	4	1 120	1 830	169	2 200	1 200
–	–	–	357	381	407	503	4	4	1 120	1 830	169	2 200	1 200
21	39,5	–	357	381	407	503	4	4	1 120	1 830	169	2 200	1 200
–	–	–	366	415	447	594	5	5	1 930	3 000	280	1 800	750
22	36	–	366	415	447	594	5	5	1 930	3 000	280	1 800	750
–	–	–	370	378	393	430	2	1,5	365	765	71	2 600	–
12	21	–	370	378	393	430	2	1,5	365	765	71	2 600	–
–	–	–	370	378	392	430	2	1,5	530	1 220	118	2 400	950
–	–	9	370	378	392	430	2	1,5	530	1 220	118	2 400	950
–	–	–	372	386	405	468	2,5	2,5	655	1 220	114	2 400	–
20	33	–	372	386	405	468	2,5	2,5	655	1 220	114	2 400	–
–	–	–	372	386	405	468	2,5	2,5	655	1 220	114	2 400	–
20	33	–	372	386	405	468	2,5	2,5	655	1 220	114	2 400	–
–	–	13	372	386	405	468	2,5	2,5	655	1 220	115	2 400	–
–	–	–	377	400	427	523	4	4	1 140	1 900	175	2 200	1 100
21	39,5	–	377	400	427	523	4	4	1 140	1 900	175	2 200	1 100
–	–	–	377	400	427	523	4	4	1 140	1 900	175	2 200	1 100
21	39,5	–	377	400	427	523	4	4	1 140	1 900	175	2 200	1 100
–	–	–	377	400	427	523	4	4	1 140	1 900	175	2 200	1 100
21	39,5	–	377	400	427	523	4	4	1 140	1 900	175	2 200	1 100
–	–	18,5	377	400	427	523	4	4	1 140	1 900	175	2 200	1 100
–	–	13	377	401	427	523	4	4	2 000	3 750	355	1 900	750
–	–	13	377	401	427	523	4	4	2 000	3 750	355	1 900	750
–	–	13	377	401	427	523	4	4	2 000	3 750	355	1 900	750
–	–	13	377	401	427	523	4	4	2 000	3 750	355	1 900	750
–	–	–	386	447	479	624	5	5	2 000	3 150	290	1 600	700
22	37,5	–	386	447	479	624	5	5	2 000	3 150	290	1 600	700
–	–	–	386	424	462	624	5	5	3 600	5 700	520	1 400	500

Cylindrical roller bearings with cage

Single row
Semi-locating and locating bearings

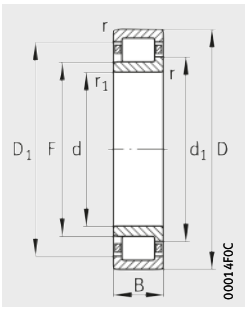

Design 1
NJ
Semi-locating bearing

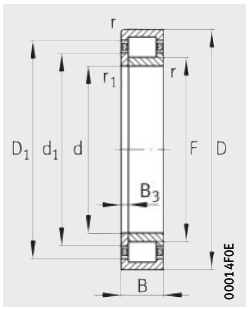

Design 1
NUP
Locating bearing

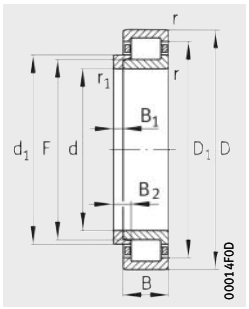

Design 1
NJ and HJ
Locating bearing

Dimension table (continued) · Dimensions in mm

Designation		De-sign	Mass m		Dimensions								
Bearing	L-section ring		Bearing ≈kg	L-section ring ≈kg	d	D	B	r min.	r_1 min.	s[2]	F	D_1 ≈	d_1 ≈
NJ1876-M1	–	1	19,6	–	**380**	480	46	2,1	2,1	5,3	407,5	447,4	415,5
NJ1876-M1	**HJ1876**	1	19,6	2,82	**380**	480	46	2,1	2,1	–	407,5	447,4	415,5
NJ1876-MP1A	–	1	19,6	–	**380**	480	46	2,1	2,1	5,3	407,5	447,4	415,5
NJ1876-MP1A	**HJ1876**	1	19,6	2,82	**380**	480	46	2,1	2,1	–	407,5	447,4	415,5
NUP1876-M1	–	1	20,1	–	**380**	480	46	2,1	2,1	–	407,5	447,4	415,5
NJ2876-M1	–	1	25,9	–	**380**	480	60	2,1	2,1	6,9	407,5	447,4	415,5
NJ2876-M1A	–	1	25,9	–	**380**	480	60	2,1	2,1	6,9	407,5	447,4	415,5
NUP2876-M1	–	1	26,4	–	**380**	480	60	2,1	2,1	–	407,5	447,4	415,5
NUP2876-M1A	–	1	26,4	–	**380**	480	60	2,1	2,1	–	407,5	447,4	415,5
NJ2976-M1	–	1	53,8	–	**380**	520	82	4	4	7,2	414	471,6	425,9
NUP2976-M1	–	1	54,5	–	**380**	520	82	4	4	–	414	471,6	425,9
NJ1076-M1	–	1	70,7	–	**380**	560	82	5	5	9	425	498,1	441,6
NJ1076-M1	**HJ1076**	1	70,7	7,86	**380**	560	82	5	5	–	425	498,1	441,6
NJ1076-M1A	–	1	70,7	–	**380**	560	82	5	5	9	425	498,1	441,6
NJ1076-M1A	**HJ1076**	1	70,7	7,86	**380**	560	82	5	5	–	425	498,1	441,6
NJ1076-MP1A	–	1	68,7	–	**380**	560	82	5	5	9	425	498,1	441,6
NJ1076-MP1A	**HJ1076**	1	68,7	7,86	**380**	560	82	5	5	–	425	498,1	441,6
NJ2276-E-M1	–	1	292	–	**380**	680	175	6	6	13,8	451	588,8	481
NJ2276-E-M1	**HJ2276-E**	1	292	17,3	**380**	680	175	6	6	–	451	588,8	481
Z-544425.ZL	–	2 NJ	37,4	–	**381**	508	63,5	5	3	–	407	469,3	421,8
NJ1880-M1	–	1	20,8	–	**400**	500	46	2,1	2,1	5,3	428	468	436
NJ1880-M1	**HJ1880**	1	20,8	3,18	**400**	500	46	2,1	2,1	–	428	468	436
NUP2880-M1	–	1	28,4	–	**400**	500	60	2,1	2,1	–	428	468	436
NJ1980-M1	–	1	42,9	–	**400**	540	65	4	4	7,2	436	492,7	447,3
NJ1980-M1	**HJ1980**	1	42,9	6,22	**400**	540	65	4	4	–	436	492,7	447,3
NJ1980-M1A	–	1	42,9	–	**400**	540	65	4	4	7,2	436	492,7	447,3
NJ1980-M1A	**HJ1980**	1	42,9	6,22	**400**	540	65	4	4	–	436	492,7	447,3
NJ2980-M1	–	1	56,1	–	**400**	540	82	4	4	7,2	434	494	445,9
NJ2980-MP1A	–	1	54,9	–	**400**	540	82	4	4	7,2	434	494	445,9
NJ1080-M1	–	1	92,2	–	**400**	600	90	5	5	9,5	450	531,5	469
NJ1080-M1	**HJ1080**	1	92,2	10,3	**400**	600	90	5	5	–	450	531,5	469
NJ1080-M1A	–	1	92,2	–	**400**	600	90	5	5	9,5	450	531,5	469
NJ1080-M1A	**HJ1080**	1	92,2	10,3	**400**	600	90	5	5	–	450	531,5	469
NUP1080-M1	–	1	94,4	–	**400**	600	90	5	5	–	450	531,5	469
NUP2080-E-M1	–	1	126	–	**400**	600	118	5	5	–	450	533,6	469,7

[1] Under axial load, observe the dimensions D_1 and d_1.

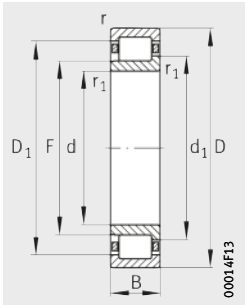

Design 2
NJ
Semi-locating bearing

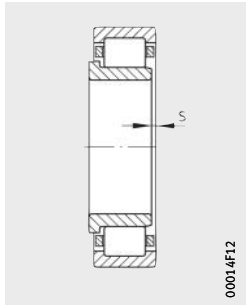

2) Axial displacement “s” for NJ

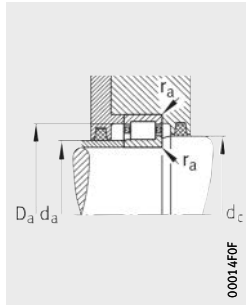

Mounting dimensions for NJ
for NJ and HJ, page 363

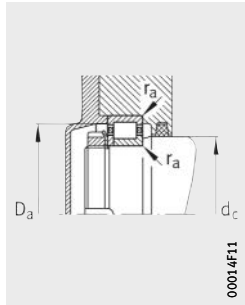

Mounting dimensions for NUP

			Mounting dimensions						Basic load ratings		Fatigue limit load	Limiting speed	Reference speed
B_1	B_2	B_3	d_a		d_c	D_a	r_a	r_{a1}	dyn. C_r	stat. C_{0r}	C_{ur}	n_G	n_B
			min.[1]	max.	min.	max.[1]	max.	max.	kN	kN	kN	min^{-1}	min^{-1}
–	–	–	390	404	420	470	2	2	490	1 000	91	2 400	–
14	25	–	390	404	420	470	2	2	490	1 000	91	2 400	–
–	–	–	390	404	420	470	2	2	490	1 000	91	2 400	–
14	25	–	390	404	420	470	2	2	490	1 000	91	2 400	–
–	–	11	390	404	420	470	2	2	490	1 000	91	2 400	–
–	–	–	390	404	420	470	2	2	695	1 560	148	2 200	900
–	–	–	390	404	420	470	2	2	695	1 560	148	2 200	900
–	–	12	390	404	420	470	2	2	695	1 560	148	2 200	900
–	–	12	390	404	420	470	2	2	695	1 560	148	2 200	900
–	–	–	395	410	432	505	3	3	1 320	2 700	255	2 000	800
–	–	12	395	410	432	505	3	3	1 320	2 700	255	2 000	800
–	–	–	397	420	447	543	4	4	1 180	2 000	180	2 000	1 000
21	39,5	–	397	420	447	543	4	4	1 180	2 000	180	2 000	1 000
–	–	–	397	420	447	543	4	4	1 180	2 000	180	2 000	1 000
21	39,5	–	397	420	447	543	4	4	1 180	2 000	180	2 000	1 000
–	–	–	397	420	447	543	4	4	1 180	2 000	180	2 000	1 000
21	39,5	–	397	420	447	543	4	4	1 180	2 000	180	2 000	1 000
–	–	–	406	446	484	654	5	5	4 050	6 700	610	1 400	450
25	50	–	406	446	484	654	5	5	4 050	6 700	610	1 400	450
–	–	–	393	403	427	491	4	2,5	1 020	1 860	150	2 000	800
–	–	–	410	424	441	490	2,1	2,1	520	1 100	98	2 400	–
15	26	–	410	424	441	490	2,1	2,1	520	1 100	98	2 400	–
–	–	12	410	424	441	490	2	2	735	1 700	159	2 200	850
–	–	–	415	432	453	525	3	3	800	1 500	141	2 200	–
22	37,5	–	415	432	453	525	3	3	800	1 500	141	2 200	–
–	–	–	415	432	453	525	3	3	800	1 500	141	2 200	–
22	37,5	–	415	432	453	525	3	3	800	1 500	141	2 200	–
–	–	–	415	430	452	525	3	3	1 340	2 750	265	2 000	750
–	–	–	415	430	452	525	3	3	1 340	2 750	265	2 000	750
–	–	–	417	445	474	583	4	4	1 370	2 320	212	1 900	950
23	43	–	417	445	474	583	4	4	1 370	2 320	212	1 900	950
–	–	–	417	445	474	583	4	4	1 370	2 320	212	1 900	950
23	43	–	417	445	474	583	4	4	1 370	2 320	212	1 900	950
–	–	20	417	445	474	583	4	4	1 370	2 320	212	1 900	950
–	–	16,5	417	446	476	583	4	4	2 280	4 400	415	1 800	670

Cylindrical roller bearings with cage

Single row
Semi-locating and locating bearings

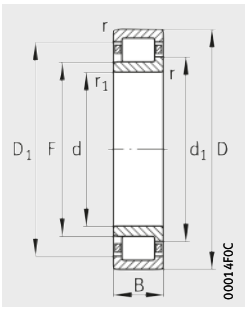

Design 1
NJ
Semi-locating bearing

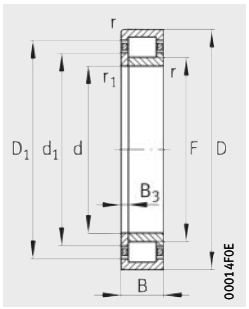

Design 1
NUP
Locating bearing

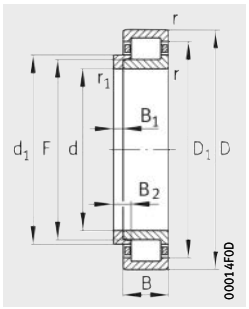

Design 1
NJ and HJ
Locating bearing

Dimension table (continued) · Dimensions in mm

Designation		De-sign	Mass m		Dimensions							
Bearing	L-section ring		Bearing ≈kg	L-section ring ≈kg	d	D	B	r min.	r_1/r_2 min.	s[2]	F	D_1 ≈
NUP2080-E-M1A	–	1	126	–	**400**	600	118	5	5	–	450	533,6
NJ2280-E-M1	–	1	342	–	**400**	720	105	6	6	15	471	630,5
Z-545999.ZL	–	2 NUP	29,6	–	**404,6**	508	60,325	5	5	–	427,2	477,2
NJ1884-MPA	–	1	22,5	–	**420**	520	46	2,1	2,1	5,3	448	488
NJ1884-MPA	**HJ1884**	1	22,5	3,33	**420**	520	46	2,1	2,1	–	448	488
NJ1884-M1	–	1	21,4	–	**420**	520	46	2,1	2,1	5,3	448	488
NJ1884-M1	**HJ1884**	1	21,4	3,33	**420**	520	46	2,1	2,1	–	448	488
NJ1884-M1A	–	1	21,4	–	**420**	520	46	2,1	2,1	5,3	448	488
NJ1884-M1A	**HJ1884**	1	21,4	3,33	**420**	520	46	2,1	2,1	–	448	488
NJ2884-M1	–	1	25,1	–	**420**	520	60	2,1	2,1	6,9	448	488
NUP2884-M1	–	1	27,8	–	**420**	520	60	2,1	2,1	–	448	488
NJ1984-M1	–	1	45,2	–	**420**	560	65	4	4	7,2	456	510,4
NJ1984-M1	**HJ1984**	1	45,2	6,51	**420**	560	65	4	4	–	456	510,4
NJ1984-M1A	–	1	45,2	–	**420**	560	65	4	4	7,2	456	510,4
NJ1984-M1A	**HJ1984**	1	45,2	6,51	**420**	560	65	4	4	–	456	510,4
NJ2984-M1	–	1	59,4	–	**420**	560	82	4	4	6	454	511,6
NJ2984-M1A	–	1	59,4	–	**420**	560	82	4	4	6	454	511,6
NUP2984-M1	–	1	60,6	–	**420**	560	82	4	4	–	454	511,6
NJ1084-M1	–	1	95,1	–	**420**	620	90	5	5	15	470	551,5
NJ1084-M1	**HJ1084**	1	95,1	10,7	**420**	620	90	5	5	–	470	551,5
NJ1084-M1A	–	1	95,1	–	**420**	620	90	5	5	15	470	551,5
NJ1084-M1A	**HJ1084**	1	95,1	10,7	**420**	620	90	5	5	–	470	551,5
Z-544003.ZL	–	2 NUP	49,9	–	**431,762**	558,825	73,025	4	7,5/4	–	456,7	510
NJ1888-M1	–	1	22,7	–	**440**	540	46	2,1	2,1	5,3	468	508
NJ1888-M1	**HJ1888**	1	22,7	3,48	**440**	540	46	2,1	2,1	–	468	508
NJ1888-M1A	–	1	22,7	–	**440**	540	46	2,1	2,1	5,3	468	508
NJ1888-M1A	**HJ1888**	1	22,7	3,48	**440**	540	46	2,1	2,1	–	468	508
NJ2888-M1	–	1	30	–	**440**	540	60	2,1	2,1	6,9	468	508
NJ2888-M1A	–	1	30	–	**440**	540	60	2,1	2,1	6,9	468	508
NUP2888-M1	–	1	30,6	–	**440**	540	60	2,1	2,1	–	468	508
NUP2888-M1A	–	1	30,6	–	**440**	540	60	2,1	2,1	–	468	508
NUP2888-MP1A	–	1	29,8	–	**440**	540	60	2,1	2,1	–	468	508
NJ2988-M1	–	1	82,2	–	**440**	600	95	4	4	8,7	480	545,6
NJ2988-M1	**HJ2988**	1	82,2	8,38	**440**	600	95	4	4	–	480	545,6
NJ2988-M1A	–	1	82,2	–	**440**	600	95	4	4	8,7	480	545,6

[1] Under axial load, observe the dimensions D_1 and d_1.

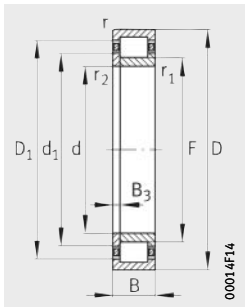

Design 2
NUP
Locating bearing

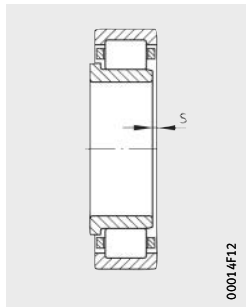

2) Axial displacement “s” for NJ

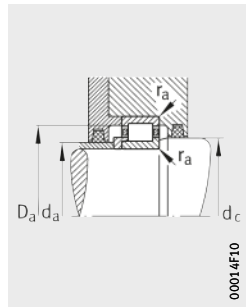

Mounting dimensions
for NJ and HJ
for NJ, page 361

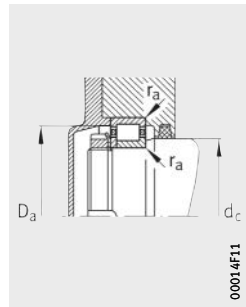

Mounting dimensions
for NUP

				Mounting dimensions						Basic load ratings		Fatigue limit load	Limiting speed	Reference speed
d_1	B_1	B_2	B_3	d_a		d_c	D_a	r_a	r_{a1}	dyn. C_r	stat. C_{0r}	C_{ur}	n_G	n_B
≈				min.[1]	max.	min.	max.[1]	max.	max.	kN	kN	kN	min^{-1}	min^{-1}
469,7	–	–	16,5	417	446	476	583	4	4	2 280	4 400	415	1 800	670
–	–	–	–	426	467	508	694	5	5	5 600	7 600	670	1 300	850
438,8	–	–	9,2	–	–	–	–	4	4	915	1 930	157	2 000	750
456	–	–	–	430	444	461	510	2	2	520	1 100	97	2 200	–
456	15	26	–	430	444	461	510	2	2	520	1 100	97	2 200	–
456	–	–	–	430	444	461	510	2	2	530	1 140	101	2 200	–
456	15	26	–	430	444	461	510	2	2	530	1 140	101	2 200	–
456	–	–	–	430	444	461	510	2	2	530	1 140	101	2 200	–
456	15	26	–	430	444	461	510	2	2	530	1 140	101	2 200	–
456	–	–	–	430	444	461	510	2	2	750	1 760	164	2 000	800
456	–	–	12	430	444	461	510	2	2	750	1 760	164	2 000	800
467,3	–	–	–	435	452	473	545	3	3	830	1 600	148	2 000	–
467,3	22	37,5	–	435	452	473	545	3	3	830	1 600	148	2 000	–
467,3	–	–	–	435	452	473	545	3	3	830	1 600	148	2 000	–
467,3	22	37,5	–	435	452	473	545	3	3	830	1 600	148	2 000	–
465,9	–	–	–	435	450	472	545	3	3	1 370	2 900	275	1 900	700
465,9	–	–	–	435	450	472	545	3	3	1 370	2 900	275	1 900	700
465,9	–	–	12	435	450	472	545	3	3	1 370	2 900	275	1 900	700
489	–	–	–	437	465	494	603	4	4	1 400	2 450	219	1 800	900
489	23	43	–	437	465	494	603	4	4	1 400	2 450	219	1 800	900
489	–	–	–	437	465	494	603	4	4	1 400	2 450	219	1 800	900
489	23	43	–	437	465	494	603	4	4	1 400	2 450	219	1 800	900
469,1	–	–	10,5	–	–	–	–	3	6/3	1 180	2 600	241	1 900	630
476	–	–	–	450	464	481	530	2	2	540	1 200	104	2 200	–
476	15	26	–	450	464	481	530	2	2	540	1 200	104	2 200	–
476	–	–	–	450	464	481	530	2	2	540	1 200	104	2 200	–
476	15	26	–	450	464	481	530	2	2	540	1 200	104	2 200	–
476	–	–	–	450	464	481	530	2	2	765	1 830	168	2 000	750
476	–	–	–	450	464	481	530	2	2	765	1 830	168	2 000	750
476	–	–	12	450	464	481	530	2	2	765	1 830	168	2 000	750
476	–	–	12	450	464	481	530	2	2	765	1 830	168	2 000	750
476	–	–	12	450	464	481	530	2	2	765	1 830	168	2 000	750
493,3	–	–	–	455	476	500	585	3	3	1 630	3 450	320	1 800	670
493,3	24	39	–	455	476	500	585	3	3	1 630	3 450	320	1 800	670
493,3	–	–	–	455	476	500	585	3	3	1 630	3 450	320	1 800	670

Cylindrical roller bearings with cage

Single row
Semi-locating and locating bearings

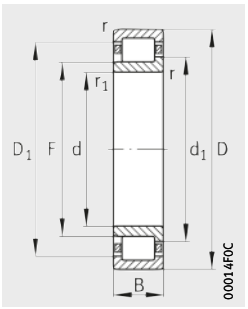

Design 1
NJ
Semi-locating bearing

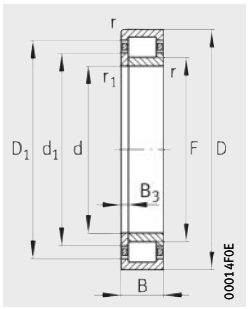

Design 1
NUP
Locating bearing

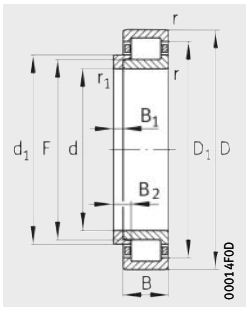

Design 1
NJ and HJ
Locating bearing

Dimension table (continued) · Dimensions in mm

Designation		De-sign	Mass m		Dimensions							
Bearing	L-section ring		Bearing ≈kg	L-section ring ≈kg	d	D	B	r min.	r_1/r_2 min.	$s^{2)}$	F	D_1 ≈
NJ2988-M1A	**HJ2988**	1	82,2	8,38	**440**	600	95	4	4	–	480	545,6
NUP2988-M1	–	1	83,4	–	**440**	600	95	4	4	–	480	545,6
NJ1088-M1	–	1	110	–	**440**	650	94	6	6	9,8	493	577,6
NJ1088-M1	**HJ1088**	1	110	12,6	**440**	650	94	6	6	–	493	577,6
NJ1088-M1A	–	1	110	–	**440**	650	94	6	6	9,8	493	577,6
NJ1088-M1A	**HJ1088**	1	110	12,6	**440**	650	94	6	6	–	493	577,6
NJ1892-M1	–	1	34,9	–	**460**	580	56	3	3	6,6	494	540,5
NJ1892-M1	**HJ1892**	1	34,9	5,33	**460**	580	56	3	3	–	494	540,5
NJ1892-M1A	–	1	34,9	–	**460**	580	56	3	3	6,6	494	540,5
NJ1892-M1A	**HJ1892**	1	34,9	5,33	**460**	580	56	3	3	–	494	540,5
NJ2892-M1	–	1	46,6	–	**460**	580	72	3	3	8	494	540,5
NJ2892-M1A	–	1	46,6	–	**460**	580	72	3	3	8	494	540,5
NUP2892-M1	–	1	47,4	–	**460**	580	72	3	3	–	494	540,5
NUP2892-M1A	–	1	47,4	–	**460**	580	72	3	3	–	494	540,5
NJ1992-M1	–	1	64,4	–	**460**	620	74	4	4	8,4	502	562,8
NJ1992-M1	**HJ1992**	1	64,4	9,03	**460**	620	74	4	4	–	502	562,8
NJ1992-M1A	–	1	64,4	–	**460**	620	74	4	4	8,4	502	562,8
NJ1992-M1A	**HJ1992**	1	64,4	9,03	**460**	620	74	4	4	–	502	562,8
NUP1992-M1	–	1	66	–	**460**	620	74	4	4	–	502	562,8
NJ2992-M1	–	1	85,2	–	**460**	620	95	4	4	8,7	500	564
NJ2992-M1	**HJ2992**	1	85,2	8,73	**460**	620	95	4	4	–	500	564
NUP2992-M1	–	1	86,5	–	**460**	620	95	4	4	–	500	564
NJ1092-M1	–	1	128	–	**460**	680	100	6	6	11,2	516	603,9
NJ1092-M1	**HJ1092**	1	128	14,2	**460**	680	100	6	6	–	516	603,9
NJ1092-M1A	–	1	128	–	**460**	680	100	6	6	11,2	516	603,9
NJ1092-M1A	**HJ1092**	1	128	14,2	**460**	680	100	6	6	–	516	603,9
NUP1092-M1	–	1	131	–	**460**	680	100	6	6	–	516	603,9
Z-539186.ZL	–	2 NUP	46,8	–	**469,9**	571,5	82,55	4	4	–	494,5	536

1) Under axial load, observe the dimensions D_1 and d_1.

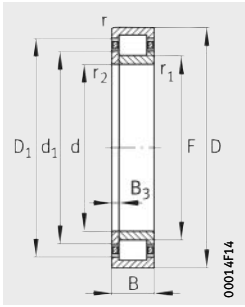

Design 2
NUP
Locating bearing

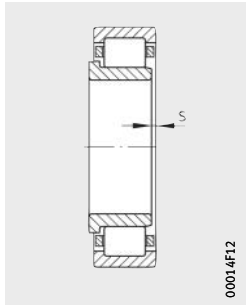

2) Axial displacement “s” for NJ

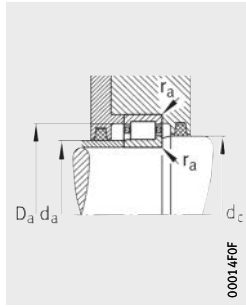

Mounting dimensions
for NJ
for NJ and HJ, page 367

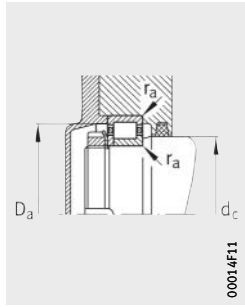

Mounting dimensions
for NUP

				Mounting dimensions						Basic load ratings		Fatigue limit load	Limiting speed	Reference speed
d_1	B_1	B_2	B_3	d_a		d_c	D_a	r_a	r_{a1}	dyn. C_r	stat. C_{0r}	C_{ur}	n_G	n_B
≈				min.[1]	max.	min.	max.[1]	max.	max.	kN	kN	kN	min^{-1}	min^{-1}
493,3	24	39	–	455	476	500	585	3	3	1 630	3 450	320	1 800	670
493,3	–	–	15	455	476	500	585	3	3	1 630	3 450	320	1 800	670
513,5	–	–	–	463	488	518	627	5	5	1 560	2 750	244	1 600	850
513,5	24	45	–	463	488	518	627	5	5	1 560	2 750	244	1 600	850
513,5	–	–	–	463	488	518	627	5	5	1 560	2 750	244	1 600	850
513,5	24	45	–	463	488	518	627	5	5	1 560	2 750	244	1 600	850
503,5	–	–	–	472	490	508	568	2,5	2,5	670	1 430	125	2 000	–
503,5	18	32	–	472	490	508	568	2,5	2,5	670	1 430	125	2 000	–
503,5	–	–	–	472	490	508	568	2,5	2,5	670	1 430	125	2 000	–
503,5	18	32	–	472	490	508	568	2,5	2,5	670	1 430	125	2 000	–
503,5	–	–	–	472	490	508	568	2,5	2,5	980	2 360	213	1 800	700
503,5	–	–	–	472	490	508	568	2,5	2,5	980	2 360	213	1 800	700
503,5	–	–	14	472	490	508	568	2,5	2,5	980	2 360	213	1 800	700
503,5	–	–	14	472	490	508	568	2,5	2,5	980	2 360	213	1 800	700
514,5	–	–	–	475	498	520	605	3	3	1 020	1 960	173	1 800	–
514,5	24	42	–	475	498	520	605	3	3	1 020	1 960	173	1 800	–
514,5	–	–	–	475	498	520	605	3	3	1 020	1 960	173	1 800	–
514,5	24	42	–	475	498	520	605	3	3	1 020	1 960	173	1 800	–
514,5	–	–	18	475	498	520	605	3	3	1 020	1 960	173	1 800	–
513,3	–	–	–	475	496	520	605	3	3	1 660	3 600	325	1 600	630
513,3	24	39	–	475	496	520	605	3	3	1 660	3 600	325	1 600	630
513,3	–	–	15	475	496	520	605	3	3	1 660	3 600	325	1 600	630
536,4	–	–	–	483	510	541	657	5	5	1 660	3 000	260	1 600	800
536,4	25	48	–	483	510	541	657	5	5	1 660	3 000	260	1 600	800
536,4	–	–	–	483	510	541	657	5	5	1 660	3 000	260	1 600	800
536,4	25	48	–	483	510	541	657	5	5	1 660	3 000	260	1 600	800
536,4	–	–	23	483	510	541	657	5	5	1 660	3 000	260	1 600	800
505	–	–	10,3	–	–	–	–	3	3	1 250	3 350	275	1 900	560

Cylindrical roller bearings with cage

Single row
Semi-locating and locating bearings

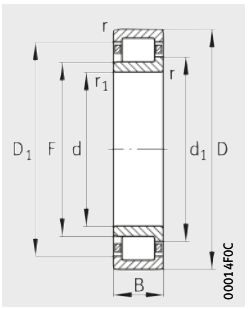

Design 1
NJ
Semi-locating bearing

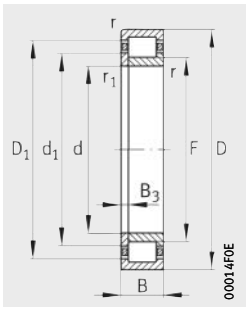

Design 1
NUP
Locating bearing

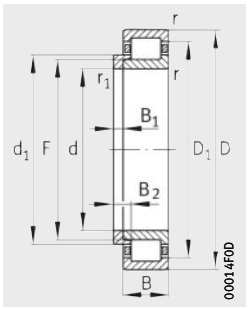

Design 1
NJ and HJ
Locating bearing

Dimension table (continued) · Dimensions in mm

Designation		De-sign	Mass m		Dimensions							
Bearing	L-section ring		Bearing ≈kg	L-section ring ≈kg	d	D	B	r min.	r_1/r_2 min.	s[2]	F	D_1 ≈
NJ1896-M1	–	1	36	–	**480**	600	56	3	3	6,6	514	560,5
NJ1896-M1	**HJ1896**	1	36	5,43	**480**	600	56	3	3	–	514	560,5
NJ1896-M1A	–	1	36	–	**480**	600	56	3	3	6,6	514	560,5
NJ1896-M1A	**HJ1896**	1	36	5,43	**480**	600	56	3	3	–	514	560,5
NJ2896-M1	–	1	47,2	–	**480**	600	72	3	3	7,9	514	560,5
NJ2896-M1	**HJ2896**	1	47,2	5,55	**480**	600	72	3	3	–	514	560,5
NUP2896-M1	–	1	48,1	–	**480**	600	72	3	3	–	514	560,5
NJ1996-M1	–	1	76	–	**480**	650	78	5	5	6,8	525	589
NJ1996-M1	**HJ1996**	1	76	9,96	**480**	650	78	5	5	–	525	589
NJ2996-M1	–	1	98,8	–	**480**	650	100	5	5	6,3	523	593
NJ2996-M1A	–	1	98,8	–	**480**	650	100	5	5	6,3	523	593
NJ1096-M1	–	1	132	–	**480**	700	100	6	6	10,7	536	623,9
NJ1096-M1	**HJ1096**	1	132	14,8	**480**	700	100	6	6	–	536	623,9
NJ1096-M1A	–	1	132	–	**480**	700	100	6	6	10,7	536	623,9
NJ1096-M1A	**HJ1096**	1	132	14,8	**480**	700	100	6	6	–	536	623,9
NJ18/500-M1	–	1	37,8	–	**500**	620	56	3	3	6,6	534	580
NJ18/500-M1	**HJ18/500**	1	37,8	5,78	**500**	620	56	3	3	–	534	580
NJ18/500-M1A	–	1	37,8	–	**500**	620	56	3	3	6,6	534	580
NJ18/500-M1A	**HJ18/500**	1	37,8	5,78	**500**	620	56	3	3	–	534	580
NJ28/500-M1	–	1	49,3	–	**500**	620	72	3	3	8	534	580
NUP28/500-M1	–	1	50,3	–	**500**	620	72	3	3	–	534	580
NJ19/500-M1	–	1	78,4	–	**500**	670	78	5	5	8,8	545	609
NJ19/500-M1	**HJ19/500**	1	78,4	10,5	**500**	670	78	5	5	–	545	609
NUP19/500-M1	–	1	80,2	–	**500**	670	78	5	5	–	545	609
NUP19/500-M1A	–	1	80,2	–	**500**	670	78	5	5	–	545	609
NJ10/500-M1	–	1	137	–	**500**	720	100	6	6	10,7	556	643,9
NJ10/500-M1	**HJ10/500**	1	137	15,6	**500**	720	100	6	6	–	556	643,9
NJ10/500-M1A	–	1	137	–	**500**	720	100	6	6	10,7	556	643,9
NJ10/500-M1A	**HJ10/500**	1	137	15,6	**500**	720	100	6	6	–	556	643,9
Z-539187.ZL	–	2 NUP	48,2	–	**508**	609,6	82,55	4	4	–	529	579
Z-544258.ZL	–	2 NUP	48,6	–	**508**	609,6	82,55	5,1	5,1	–	528,8	579
Z-544514.ZL	–	2 NUP	53,7	–	**508**	622,3	79,575	6	6/4	–	532	588,7
Z-544760.ZL	–	2 NUP	59,7	–	**508**	635	76,2	4	7,5/4	–	544,9	587,6
Z-544002.ZL	–	2 NUP	63,7	–	**508,1**	622,3	95,25	6	6	–	529	589

[1] Under axial load, observe the dimensions D_1 and d_1.

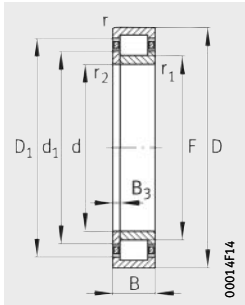

Design 2
NUP
Locating bearing

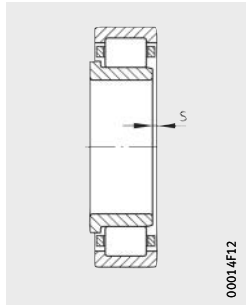

2) Axial displacement “s” for NJ

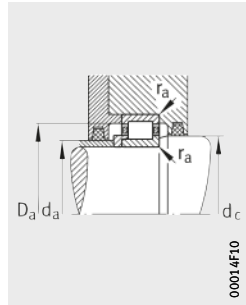

Mounting dimensions
for NJ and HJ
for NJ, page 369

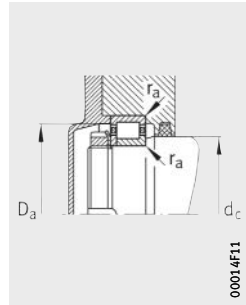

Mounting dimensions
for NUP

				Mounting dimensions						Basic load ratings		Fatigue limit load	Limiting speed	Reference speed
d_1	B_1	B_2	B_3	d_a		d_c	D_a	r_a	r_{a1}	dyn. C_r	stat. C_{0r}	C_{ur}	n_G	n_B
≈				min.[1]	max.	min.	max.[1]	max.	max.	kN	kN	kN	min^{-1}	min^{-1}
523,5	–	–	–	492	510	528	588	2,5	2,5	680	1 460	126	1 900	–
523,5	18	32	–	492	510	528	588	2,5	2,5	680	1 460	126	1 900	–
523,5	–	–	–	492	510	528	588	2,5	2,5	680	1 460	126	1 900	–
523,5	18	32	–	492	510	528	588	2,5	2,5	680	1 460	126	1 900	–
523,5	–	–	–	492	510	528	588	2,5	2,5	1 000	2 400	215	1 800	670
523,5	18	32	–	492	510	528	588	2,5	2,5	1 000	2 400	215	1 800	670
523,5	–	–	14	492	510	528	588	2,5	2,5	1 000	2 400	216	1 800	670
540	–	–	–	497	521	545	633	4	4	1 140	2 240	196	1 800	–
540	24	43	–	497	521	545	633	4	4	1 140	2 240	196	1 800	–
539	–	–	–	497	519	544	633	4	4	1 900	4 150	380	1 500	560
539	–	–	–	497	519	544	633	4	4	1 900	4 150	380	1 500	560
556,4	–	–	–	503	530	562	677	5	5	1 700	3 100	270	1 500	800
556,4	25	48	–	503	530	562	677	5	5	1 700	3 100	270	1 500	800
556,4	–	–	–	503	530	562	677	5	5	1 700	3 100	270	1 500	800
556,4	25	48	–	503	530	562	677	5	5	1 700	3 100	270	1 500	800
543,5	–	–	–	512	530	549	608	2,5	2,5	695	1 530	130	1 800	–
543,5	18	32	–	512	530	549	608	2,5	2,5	695	1 530	130	1 800	–
543,5	–	–	–	512	530	549	608	2,5	2,5	695	1 530	130	1 800	–
543,5	18	32	–	512	530	549	608	2,5	2,5	695	1 530	130	1 800	–
543,5	–	–	–	512	530	549	608	2,5	2,5	1 020	2 500	222	1 600	630
543,5	–	–	14	512	530	549	608	2,5	2,5	1 020	2 500	222	1 600	630
558,2	–	–	–	517	541	565	653	4	4	1 160	2 320	200	1 600	–
558,2	24	43	–	517	541	565	653	4	4	1 160	2 320	200	1 600	–
558,2	–	–	19	517	541	565	653	4	4	1 160	2 320	200	1 600	–
558,2	–	–	19	517	541	565	653	4	4	1 160	2 320	200	1 600	–
576,4	–	–	–	523	550	582	697	5	5	1 760	3 200	275	1 500	750
576,4	25	48	–	523	550	582	697	5	5	1 760	3 200	275	1 500	750
576,4	–	–	–	523	550	582	697	5	5	1 760	3 200	275	1 500	750
576,4	25	48	–	523	550	582	697	5	5	1 760	3 200	275	1 500	750
540,5	–	–	11,3	–	–	–	–	3	3	1 290	3 250	255	1 000	–
540,8	–	–	11,3	–	–	–	–	4	4	1 340	3 450	270	1 600	530
545,1	–	–	12,2	–	–	–	–	5	5/3	1 370	3 150	250	1 600	530
555	–	–	12,1	–	–	–	–	3	6/3	1 140	3 050	244	1 600	530
542,8	–	–	11,6	–	–	–	–	5	5	1 760	4 250	275	1 600	–

Cylindrical roller bearings with cage

Single row
Semi-locating and locating bearings

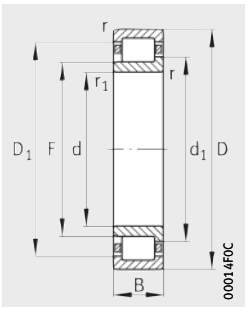

Design 1
NJ
Semi-locating bearing

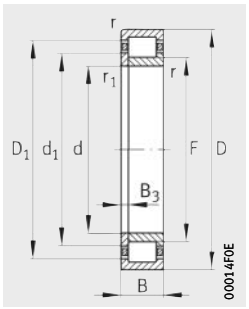

Design 1
NUP
Locating bearing

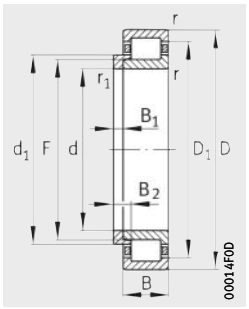

Design 1
NJ and HJ
Locating bearing

Dimension table (continued) · Dimensions in mm

Designation		De-sign	Mass m		Dimensions							
Bearing	L-section ring		Bearing ≈kg	L-section ring ≈kg	d	D	B	r min.	r_1/r_2 min.	$s^{2)}$	F	D_1 ≈
NJ18/530-M1	–	1	39,3	–	**530**	650	56	3	3	8,5	564	610,5
NJ18/530-M1	**HJ18/530**	1	39,3	6,11	**530**	650	56	3	3	–	564	610,5
NJ18/530-M1A	–	1	39,3	–	**530**	650	56	3	3	8,5	564	610,5
NJ18/530-M1A	**HJ18/530**	1	39,3	6,11	**530**	650	56	3	3	–	564	610,5
NJ28/530-M1	–	1	51,6	–	**530**	650	72	3	3	8	564	610,5
NJ28/530-M1A	–	1	51,6	–	**530**	650	72	3	3	8	564	610,5
NUP28/530-M1	–	1	52,6	–	**530**	650	72	3	3	–	564	610,5
NUP28/530-M1A	–	1	52,6	–	**530**	650	72	3	3	–	564	610,5
NJ19/530-M1	–	1	91,9	–	**530**	710	82	5	5	9,3	578	645,2
NJ19/530-M1	**HJ19/530**	1	91,9	12,4	**530**	710	82	5	5	–	578	645,2
NJ10/530-M1	–	1	193	–	**530**	780	112	6	6	10,2	591	696
NJ10/530-M1	**HJ10/530**	1	193	19,1	**530**	780	112	6	6	–	591	696
NJ10/530-M1A	–	1	193	–	**530**	780	112	6	6	10,2	591	696
NJ10/530-M1A	**HJ10/530**	1	193	19,1	**530**	780	112	6	6	–	591	696
Z-544001.ZL	–	2 NUP	101	–	**533,4**	685,8	101,6	3	6/3	–	570	636,5
Z-544515.ZL	–	2 NUP	66,5	–	**546,1**	660,4	92,08	5	5	–	571	627,6
Z-544759.ZL	–	2 NUP	81,4	–	**558,8**	685,8	100,013	5,5	5,5	–	584,3	648
Z-545998.ZL	–	2 NUP	114	–	**558,8**	711,2	111,125	3	6/3	–	595	661,8
NJ18/560-M1	–	1	41,5	–	**560**	680	56	3	3	6,6	594	640
NJ18/560-M1	**HJ18/560**	1	41,5	6,44	**560**	680	56	3	3	–	594	640
NJ18/560-M1A	–	1	41,5	–	**560**	680	56	3	3	6,6	594	640
NJ18/560-M1A	**HJ18/560**	1	41,5	6,44	**560**	680	56	3	3	–	594	640
NJ28/560-M1A	–	1	54,4	–	**560**	680	72	3	3	8	594	640
NUP28/560-M1	–	1	55,5	–	**560**	680	72	3	3	–	594	640
NJ19/560-M1	–	1	107	–	**560**	750	85	5	5	9,6	610	682
NJ19/560-M1	**HJ19/560**	1	107	14,3	**560**	750	85	5	5	–	610	682
NJ19/560-M1A	–	1	107	–	**560**	750	85	5	5	9,6	610	682
NJ19/560-M1A	**HJ19/560**	1	107	14,3	**560**	750	85	5	5	–	610	682
NJ29/560-M1	–	1	143	–	**560**	750	112	5	5	6,5	607	687,5
NJ10/560-M1	–	1	216	–	**560**	820	115	6	6	9,8	626	731
NJ10/560-M1	**HJ10/560**	1	216	23,5	**560**	820	115	6	6	–	626	731
NJ10/560-M1A	–	1	216	–	**560**	820	115	6	6	9,8	626	731
NJ10/560-M1A	**HJ10/560**	1	216	23,5	**560**	820	115	6	6	–	626	731
Z-544513.ZL	–	2 NUP	108	–	**569,9**	723,9	101,6	6	6	–	622	685,5

1) Under axial load, observe the dimensions D_1 and d_1.

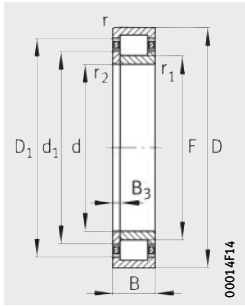

Design 2
NUP
Locating bearing

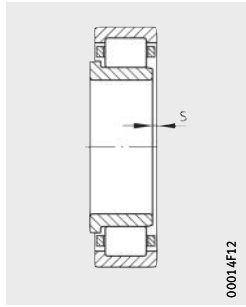

2) Axial displacement “s” for NJ

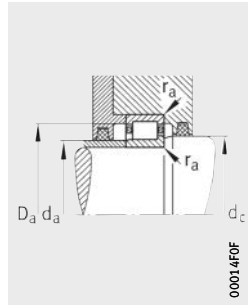

Mounting dimensions
for NJ
for NJ and HJ, page 371

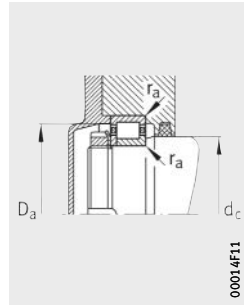

Mounting dimensions
for NUP

				Mounting dimensions						Basic load ratings		Fatigue limit load	Limiting speed	Reference speed
d_1	B_1	B_2	B_3	d_a		d_c	D_a	r_a	r_{a1}	dyn. C_r	stat. C_{0r}	C_{ur}	n_G	n_B
≈				min.[1]	max.	min.	max.[1]	max.	max.	kN	kN	kN	min^{-1}	min^{-1}
573,5	–	–	–	542	560	579	638	2,5	2,5	720	1 660	138	1 800	–
573,5	18	32	–	542	560	579	638	2,5	2,5	720	1 660	138	1 800	–
573,5	–	–	–	542	560	579	638	2,5	2,5	720	1 660	138	1 800	–
573,5	18	32	–	542	560	579	638	2,5	2,5	720	1 660	138	1 800	–
573,5	–	–	–	542	560	579	638	2,5	2,5	1 060	2 700	237	1 500	600
573,5	–	–	–	542	560	579	638	2,5	2,5	1 060	2 700	237	1 500	600
573,5	–	–	14	542	560	579	638	2,5	2,5	1 060	2 700	236	1 500	600
573,5	–	–	14	542	560	579	638	2,5	2,5	1 060	2 700	236	1 500	600
592	–	–	–	547	574	599	693	4	4	1 290	2 650	224	1 500	–
592	25	45	–	547	574	599	693	4	4	1 290	2 650	224	1 500	–
615	–	–	–	553	585	621	757	5	5	2 500	4 550	390	1 300	630
615	26	48	–	553	585	621	757	5	5	2 500	4 550	390	1 300	630
615	–	–	–	553	585	621	757	5	5	2 500	4 550	390	1 300	630
615	26	48	–	553	585	621	757	5	5	2 500	4 550	390	1 300	630
585,4	–	–	13,3	–	–	–	–	2,5	5/2,5	2 040	4 800	375	1 400	450
584,5	–	–	12	–	–	–	–	4	4	1 700	4 400	345	1 500	450
599	–	–	14	–	–	–	–	4	4	1 930	4 750	415	1 400	–
610,3	–	–	15,6	–	–	–	–	2,5	5/2,5	2 200	5 400	415	1 400	430
603,5	–	–	–	572	590	609	668	2,5	2,5	735	1 700	139	1 600	–
603,5	18	32	–	572	590	609	668	2,5	2,5	735	1 700	139	1 600	–
603,5	–	–	–	572	590	609	668	2,5	2,5	735	1 700	139	1 600	–
603,5	18	32	–	572	590	609	668	2,5	2,5	735	1 700	139	1 600	–
603,5	–	–	–	572	590	609	668	2,5	2,5	1 060	2 750	238	1 500	560
603,5	–	–	14	572	590	609	668	2,5	2,5	1 060	2 750	238	1 500	560
625	–	–	–	577	606	632	733	4	4	1 460	3 000	244	1 400	–
625	26	46	–	577	606	632	733	4	4	1 460	3 000	244	1 400	–
625	–	–	–	577	606	632	733	4	4	1 460	3 000	244	1 400	–
625	26	46	–	577	606	632	733	4	4	1 460	3 000	244	1 400	–
625	–	–	–	577	603	630	733	4	4	2 450	5 500	475	1 400	450
650	–	–	–	583	620	657	797	5	5	2 700	5 100	435	1 200	600
650	30	50	–	583	620	657	797	5	5	2 700	5 100	435	1 200	600
650	–	–	–	583	620	657	797	5	5	2 700	5 100	435	1 200	600
650	30	50	–	583	620	657	797	5	5	2 700	5 100	435	1 200	600
636,7	–	–	14,8	–	–	–	–	5	5	2 000	5 100	385	1 400	400

Cylindrical roller bearings with cage

Single row
Semi-locating and locating bearings

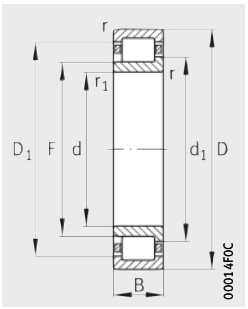

Design 1
NJ
Semi-locating bearing

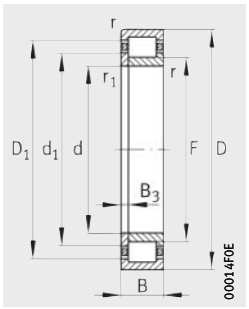

Design 1
NUP
Locating bearing

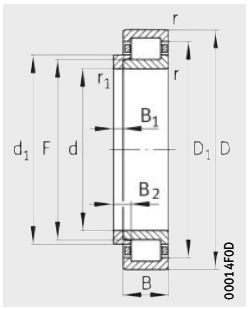

Design 1
NJ and HJ
Locating bearing

Dimension table (continued) · Dimensions in mm

Designation		De-sign	Mass m		Dimensions							
Bearing	L-section ring		Bearing ≈kg	L-section ring ≈kg	d	D	B	r min.	r_1/r_2 min.	s[2]	F	D_1 ≈
Z-548036.ZL	–	2 NUP	97,3	–	**570**	720	95	3	3	–	608	671,5
Z-544257.ZL	–	2 NUP	75	–	**571,5**	685,1	101,6	6	6	–	594,5	651
Z-547424.ZL	–	2 NUP	115	–	**571,5**	711,2	120,65	5	5	–	601,5	668,3
Z-544427.ZL	–	2 NUP	107	–	**571,5**	723,9	101,6	6	6	–	609,5	675,9
Z-543431.ZL	–	2 NUP	91,1	–	**588,724**	711,2	88,9	6	6	–	589	669
Z-545612.ZL	–	2 NUP	98,4	–	**596,9**	736,6	101,6	6	6	–	624,5	694,5
NJ18/600-M1	–	1	51,7	–	**600**	730	60	3	3	7	637	687
NJ18/600-M1	**HJ18/600**	1	51,7	8,22	**600**	730	60	3	3	–	637	687
NJ18/600-M1A	–	1	51,7	–	**600**	730	60	3	3	7	637	687
NJ18/600-M1A	**HJ18/600**	1	51,7	8,22	**600**	730	60	3	3	–	637	687
NJ28/600-M1	–	1	63,4	–	**600**	730	78	3	3	8,5	637	687
NUP28/600-M1	–	1	69,8	–	**600**	730	78	3	3	–	637	687
NJ19/600-M1	–	1	128	–	**600**	800	90	5	5	9,9	652	730,7
NJ19/600-M1	**HJ19/600**	1	128	15,9	**600**	800	90	5	5	–	652	730,7
NJ19/600-M1A	–	1	128	–	**600**	800	90	5	5	9,9	652	730,7
NJ19/600-M1A	**HJ19/600**	1	128	15,9	**600**	800	90	5	5	–	652	730,7
NJ29/600-E-M1	–	1	174	–	**600**	800	118	5	5	8,4	649	739
NJ10/600-M1	–	1	246	–	**600**	870	118	6	6	10,6	667	776
NJ10/600-M1	**HJ10/600**	1	246	26,4	**600**	870	118	6	6	–	667	776
NJ10/600-M1A	–	1	246	–	**600**	870	118	6	6	10,6	667	776
NJ10/600-M1A	**HJ10/600**	1	246	26,4	**600**	870	118	6	6	–	667	776
NJ18/630-M1	–	1	73,4	–	**630**	780	69	4	4	8,4	672	732
NJ18/630-M1	**HJ18/630**	1	73,4	10,4	**630**	780	69	4	4	–	672	732
NJ18/630-M1A	–	1	73,4	–	**630**	780	69	4	4	8,4	672	732
NJ18/630-M1A	**HJ18/630**	1	73,4	10,4	**630**	780	69	4	4	–	672	732
NJ28/630-M1	–	1	96,2	–	**630**	780	88	4	4	8,7	672	732
NJ28/630-M1A	–	1	96,2	–	**630**	780	88	4	4	8,7	672	732
NUP28/630-M1	–	1	97,7	–	**630**	780	88	4	4	–	672	732
NUP28/630-M1A	–	1	97,7	–	**630**	780	88	4	4	–	672	732
NJ19/630-M1	–	1	166	–	**630**	850	100	6	6	8,5	688	771
NJ19/630-M1	**HJ19/630**	1	166	18,9	**630**	850	100	6	6	–	688	771
NUP19/630-M1	–	1	172	–	**630**	850	100	6	6	–	688	771
NJ29/630-E-M1	–	1	213	–	**630**	850	128	6	6	10,3	683	784
NJ29/630-E-M1A	–	1	213	–	**630**	850	128	6	6	10,3	683	784
NJ10/630-M1	–	1	294	–	**630**	920	128	7,5	7,5	11,7	700	826,2

[1] Under axial load, observe the dimensions D_1 and d_1.

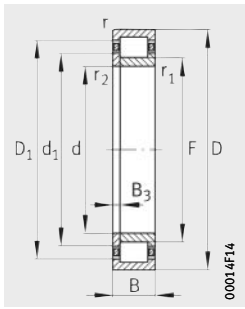

Design 2
NUP
Locating bearing

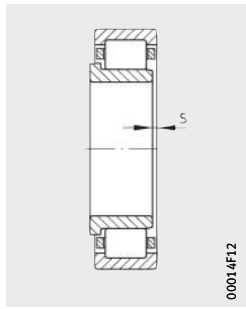

2) Axial displacement “s” for NJ

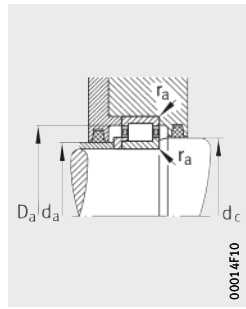

Mounting dimensions
for NJ and HJ
for NJ, page 373

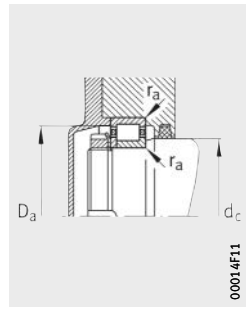

Mounting dimensions
for NUP

				Mounting dimensions						Basic load ratings		Fatigue limit load	Limiting speed	Reference speed
d_1	B_1	B_2	B_3	d_a		d_c	D_a	r_a	r_{a1}	dyn. C_r	stat. C_{0r}	C_{ur}	n_G	n_B
≈				min.[1]	max.	min.	max.[1]	max.	max.	kN	kN	kN	min^{-1}	min^{-1}
622,5	–	–	15	–	–	–	–	2	2	1 800	4 300	375	1 400	–
608	–	–	13,3	–	–	–	–	5	5	1 860	4 900	385	1 400	430
616,9	–	–	12,8	–	–	–	–	4	4	2 500	6 400	570	1 400	–
624,8	–	–	13,3	–	–	–	–	5	5	2 120	5 200	395	1 400	400
607	–	–	12	–	–	–	–	5	5	2 080	4 400	380	1 400	430
640,5	–	–	13,3	–	–	–	–	5	5	2 200	5 300	455	1 400	–
647	–	–	–	612	632	654	718	2,5	2,5	850	2 000	161	1 500	–
647	20	35	–	612	632	654	718	2,5	2,5	850	2 000	161	1 500	–
647	–	–	–	612	632	654	718	2,5	2,5	850	2 000	161	1 500	–
647	20	35	–	612	632	654	718	2,5	2,5	850	2 000	161	1 500	–
647	–	–	–	612	632	654	718	2,5	2,5	1 250	3 350	280	1 400	500
647	–	–	15	612	632	654	718	2,5	2,5	1 250	3 350	280	1 400	500
667,5	–	–	–	617	647	675	783	4	4	1 700	3 450	280	1 400	–
667,5	26	47	–	617	647	675	783	4	4	1 700	3 450	280	1 400	–
667,5	–	–	–	617	647	675	783	4	4	1 700	3 450	280	1 400	–
667,5	26	47	–	617	647	675	783	4	4	1 700	3 450	280	1 400	–
666	–	–	–	617	645	674	783	4	4	3 000	6 700	570	1 200	400
693,5	–	–	–	623	661	699	847	5	5	2 850	5 400	440	1 100	530
693,5	30	51,5	–	623	661	699	847	5	5	2 850	5 400	440	1 100	530
693,5	–	–	–	623	661	699	847	5	5	2 850	5 400	440	1 100	530
693,5	30	51,5	–	623	661	699	847	5	5	2 850	5 400	440	1 100	530
684	–	–	–	645	667	691	765	3	3	1 140	2 600	212	1 400	–
684	20,5	37	–	645	667	691	765	3	3	1 140	2 600	212	1 400	–
684	–	–	–	645	667	691	765	3	3	1 140	2 600	212	1 400	–
684	20,5	37	–	645	667	691	765	3	3	1 140	2 600	212	1 400	–
684	–	–	–	645	667	691	765	3	3	1 700	4 400	370	1 300	430
684	–	–	–	645	667	691	765	3	3	1 700	4 400	370	1 300	430
684	–	–	15	645	667	691	765	3	3	1 700	4 400	370	1 300	430
684	–	–	15	645	667	691	765	3	3	1 700	4 400	370	1 300	430
705	–	–	–	653	683	713	827	5	5	1 900	3 900	320	1 300	–
705	26	50	–	653	683	713	827	5	5	1 900	3 900	320	1 300	–
705	–	–	24	653	683	713	827	5	5	1 900	3 900	320	1 300	–
702,5	–	–	–	653	678	710,4	827	5	5	3 350	7 350	540	1 100	380
702,5	–	–	–	653	678	710,4	827	5	5	3 350	7 350	540	1 100	380
728	–	–	–	658	694	734	892	6	6	3 250	6 200	495	1 100	500

Cylindrical roller bearings with cage

Single row
Semi-locating and locating bearings

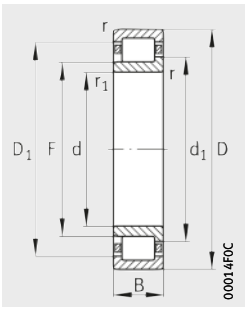

Design 1
NJ
Semi-locating bearing

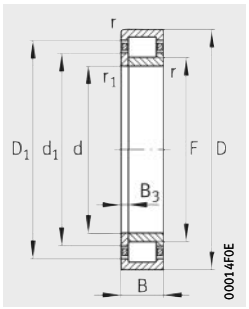

Design 1
NUP
Locating bearing

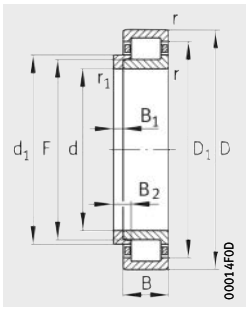

Design 1
NJ and HJ
Locating bearing

Dimension table (continued) · Dimensions in mm

Designation		De-sign	Mass m		Dimensions							
Bearing	L-section ring		Bearing ≈kg	L-section ring ≈kg	d	D	B	r min.	r_1/r_2 min.	$s^{2)}$	F	D_1 ≈
NJ10/630-M1	**HJ10/630**	1	294	30,7	**630**	920	128	7,5	7,5	–	700	826,2
NJ10/630-M1A	–	1	294	–	**630**	920	128	7,5	7,5	11,7	700	826,2
NJ10/630-M1A	**HJ10/630**	1	294	30,7	**630**	920	128	7,5	7,5	–	700	826,2
Z-546151.ZL	–	2 NUP	142	–	**647,7**	825,5	101,6	6	6	–	686,6	770,2
Z-544979.ZL	–	2 NUP	130	–	**660,4**	812,8	107,95	6	6	–	698,5	765,3
Z-544000.ZL	–	2 NUP	180	–	**660,4**	863,6	107,95	6	6	–	698,5	805,9
Z-544428.ZL	–	2 NUP	195	–	**660,4**	866,775	114,3	6	6	–	705	805,5
Z-544426.ZL	–	2 NUP	122	–	**660,406**	812,8	101,6	6	6	–	698,5	765,3
Z-543432.ZL	–	2 NUP	134	–	**666,75**	812,8	120,65	5	5	–	696	769,5
NJ18/670-M1	–	1	77,6	–	**670**	820	69	4	4	7,8	712	772
NJ18/670-M1	**HJ18/670**	1	77,6	10,9	**670**	820	69	4	4	–	712	772
NJ18/670-M1A	–	1	77,6	–	**670**	820	69	4	4	7,8	712	772
NJ18/670-M1A	**HJ18/670**	1	77,6	10,9	**670**	820	69	4	4	–	712	772
NJ28/670-M1	–	1	102	–	**670**	820	88	4	4	8,7	712	772
NJ28/670-M1A	–	1	102	–	**670**	820	88	4	4	8,7	712	772
NUP28/670-M1	–	1	103	–	**670**	820	88	4	4	–	712	772
NUP28/670-M1A	–	1	103	–	**670**	820	88	4	4	–	712	772
NUP19/670-M1	–	1	194	–	**670**	900	103	6	6	–	731	817
NJ10/670-M1	–	1	356	–	**670**	980	136	7,5	7,5	12,7	745	876,2
NJ10/670-M1	**HJ10/670**	1	356	35,1	**670**	980	136	7,5	7,5	–	745	876,2
NJ10/670-M1A	–	1	356	–	**670**	980	136	7,5	7,5	12,7	745	876,2
NJ10/670-M1A	**HJ10/670**	1	356	35,1	**670**	980	136	7,5	7,5	–	745	876,2
Z-546109.ZL	–	2 NUP	161	–	**673,1**	838,2	117,475	5	5	–	712	787,2
NJ18/710-M1	–	1	93,7	–	**710**	870	74	4	4	7,9	753	820
NJ18/710-M1	**HJ18/710**	1	93,7	12,6	**710**	870	74	4	4	–	753	820
NJ18/710-M1A	–	1	93,7	–	**710**	870	74	4	4	7,9	753	820
NJ18/710-M1A	**HJ18/710**	1	93,7	12,6	**710**	870	74	4	4	–	753	820
NJ28/710-M1	–	1	124	–	**710**	870	95	4	4	8,7	753	820
NJ28/710-M1A	–	1	124	–	**710**	870	95	4	4	8,7	753	820
NUP28/710-M1	–	1	126	–	**710**	870	95	4	4	–	753	820
NUP28/710-M1A	–	1	126	–	**710**	870	95	4	4	–	753	820
NJ19/710-M1	–	1	218	–	**710**	950	106	6	6	9,3	774	867,7
NJ19/710-M1	**HJ19/710**	1	218	26,4	**710**	950	106	6	6	–	774	867,7
NJ19/710-M1A	–	1	218	–	**710**	950	106	6	6	9,3	774	867,7
NJ19/710-M1A	**HJ19/710**	1	218	26,4	**710**	950	106	6	6	–	774	867,7

1) Under axial load, observe the dimensions D_1 and d_1.

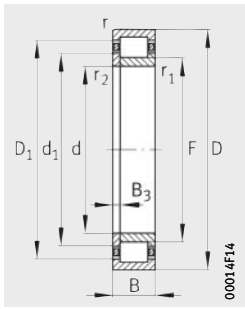

Design 2
NUP
Locating bearing

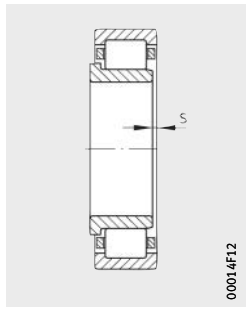

2) Axial displacement “s” for NJ

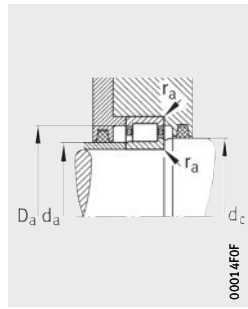

Mounting dimensions
for NJ
for NJ and HJ, page 375

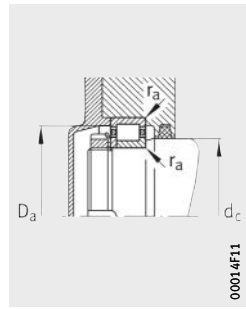

Mounting dimensions
for NUP

				Mounting dimensions						Basic load ratings		Fatigue limit load	Limiting speed	Reference speed
d_1	B_1	B_2	B_3	d_a		d_c	D_a	r_a	r_{a1}	dyn. C_r	stat. C_{0r}	C_{ur}	n_G	n_B
≈				min.[1]	max.	min.	max.[1]	max.	max.	kN	kN	kN	min^{-1}	min^{-1}
728	31	55	–	658	694	734	892	6	6	3 250	6 200	495	1 100	500
728	–	–	–	658	694	734	892	6	6	3 250	6 200	495	1 100	500
728	31	55	–	658	694	734	892	6	6	3 250	6 200	495	1 100	500
705,6	–	–	16,8	–	–	–	–	5	5	2 360	5 300	385	1 200	360
714,3	–	–	14	–	–	–	–	5	5	2 400	6 300	470	1 200	340
722,9	–	–	16,5	–	–	–	–	5	5	2 850	5 700	405	1 100	360
727,5	–	–	14,7	–	–	–	–	5	5	3 100	6 700	485	1 100	320
713,8	–	–	13,3	–	–	–	–	5	5	2 240	6 000	435	1 200	340
713	–	–	10,3	–	–	–	–	4	4	3 050	8 000	670	1 200	–
724	–	–	–	685	707	731	805	3	3	1 180	2 750	220	1 400	–
724	20,5	37	–	685	707	731	805	3	3	1 180	2 750	220	1 400	–
724	–	–	–	685	707	731	805	3	3	1 180	2 750	220	1 400	–
724	20,5	37	–	685	707	731	805	3	3	1 180	2 750	220	1 400	–
724	–	–	–	685	707	731	805	3	3	1 760	4 650	385	1 200	400
724	–	–	–	685	707	731	805	3	3	1 760	4 650	385	1 200	400
724	–	–	15	685	707	731	805	3	3	1 760	4 650	385	1 200	400
724	–	–	15	685	707	731	805	3	3	1 760	4 650	385	1 200	400
748,5	–	–	24,5	693	726	757	877	5	5	2 040	4 250	340	1 200	–
774,5	–	–	–	698	739	780	952	6	6	3 750	7 100	540	950	450
774,5	31	56,5	–	698	739	780	952	6	6	3 750	7 100	540	950	450
774,5	–	–	–	698	739	780	952	6	6	3 750	7 100	540	950	450
774,5	31	56,5	–	698	739	780	952	6	6	3 750	7 100	540	950	450
729,2	–	–	13,7	–	–	–	–	4	4	2 750	7 100	–	700	–
766,5	–	–	–	725	748	774	855	3	3	1 400	3 250	260	1 200	–
766,5	21	38	–	725	748	774	855	3	3	1 400	3 250	260	1 200	–
766,5	–	–	–	725	748	774	855	3	3	1 400	3 250	260	1 200	–
766,5	21	38	–	725	748	774	855	3	3	1 400	3 250	260	1 200	–
766,5	–	–	–	725	748	774	855	3	3	2 080	5 500	450	1 100	360
766,5	–	–	–	725	748	774	855	3	3	2 080	5 500	450	1 100	360
766,5	–	–	15	725	748	774	855	3	3	2 080	5 500	450	1 100	360
766,5	–	–	15	725	748	774	855	3	3	2 080	5 500	450	1 100	360
795,1	–	–	–	733	769	800	927	5	5	2 240	4 750	380	1 100	–
795,1	30	55	–	733	769	800	927	5	5	2 240	4 750	380	1 100	–
795,1	–	–	–	733	769	800	927	5	5	2 240	4 750	380	1 100	–
795,1	30	55	–	733	769	800	927	5	5	2 240	4 750	380	1 100	–

Cylindrical roller bearings with cage

Single row
Semi-locating and locating bearings

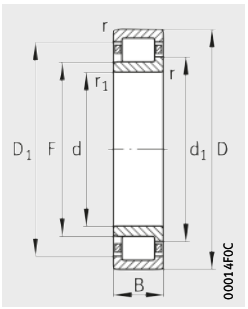

Design 1
NJ
Semi-locating bearing

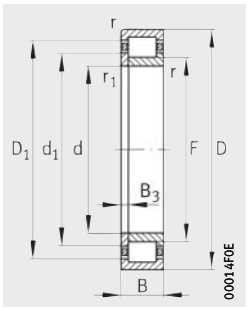

Design 1
NUP
Locating bearing

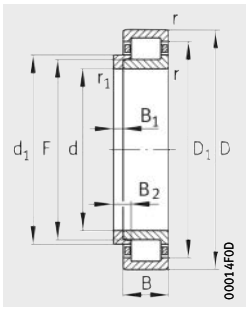

Design 1
NJ and HJ
Locating bearing

Dimension table (continued) · Dimensions in mm

Designation		De-sign	Mass m		Dimensions							
Bearing	L-section ring		Bearing ≈kg	L-section ring ≈kg	d	D	B	r min.	r_1/r_2 min.	s[2]	F	D_1 ≈
NUP19/710-M1	–	1	223	–	**710**	950	106	6	6	–	774	867,7
NUP29/710-M1A	–	1	297	–	**710**	950	140	6	6	–	770	866
NJ10/710-M1	–	1	407	–	**710**	1 030	140	7,5	7,5	12,6	790	924,5
NJ10/710-M1	**HJ10/710**	1	407	42,1	**710**	1 030	140	7,5	7,5	–	790	924,5
NJ10/710-M1A	–	1	407	–	**710**	1 030	140	7,5	7,5	12,6	790	924,5
NJ10/710-M1A	**HJ10/710**	1	407	42,1	**710**	1 030	140	7,5	7,5	–	790	924,5
Z-544519.ZL	–	2 NUP	139	–	**711,2**	863,6	107,95	6	6	–	739,4	819,5
Z-545611.ZL	–	2 NUP	194	–	**711,2**	914,4	107,95	6	3,5	–	752,5	853
Z-549125.ZL	–	2 NUP	172	–	**723,646**	900,113	114,3	6	6	–	760	846,9
Z-545997.ZL	–	2 NUP	183	–	**723,9**	901,7	120,65	7,5	7,5	–	760,8	847,6
NJ18/750-M1	–	1	111	–	**750**	920	78	5	5	8,8	799	866
NJ18/750-M1	**HJ18/750**	1	111	16,5	**750**	920	78	5	5	–	799	866
NJ18/750-M1A	–	1	112	–	**750**	920	78	5	5	8,8	799	866
NJ18/750-M1A	**HJ18/750**	1	112	16,5	**750**	920	78	5	5	–	799	866
NJ28/750-M1	–	1	146	–	**750**	920	100	5	5	10	799	866
NJ28/750-M1A	–	1	146	–	**750**	920	100	5	5	10	799	866
NUP28/750-M1	–	1	149	–	**750**	920	100	5	5	–	799	866
NUP28/750-M1A	–	1	149	–	**750**	920	100	5	5	–	799	866
NUP19/750-M1	–	1	256	–	**750**	1 000	112	6	6	–	815	911
NUP19/750-M1A	–	1	256	–	**750**	1 000	112	6	6	–	815	911
NJ10/750-M1	–	1	489	–	**750**	1 090	150	7,5	7,5	13,6	835	978
NJ10/750-M1	**HJ10/750**	1	489	49,6	**750**	1 090	150	7,5	7,5	–	835	978
NJ10/750-M1A	–	1	489	–	**750**	1 090	150	7,5	7,5	13,6	835	978
NJ10/750-M1A	**HJ10/750**	1	489	49,6	**750**	1 090	150	7,5	7,5	–	835	978
NJ18/800-M1	–	1	132	–	**800**	980	82	5	5	8,9	849	923
NJ18/800-M1	**HJ18/800**	1	134	18,5	**800**	980	82	5	5	–	849	923
NJ18/800-M1A	–	1	132	–	**800**	980	82	5	5	8,9	849	923
NJ18/800-M1A	**HJ18/800**	1	132	18,5	**800**	980	82	5	5	–	849	923
NJ28/800-M1	–	1	177	–	**800**	980	106	5	5	9,3	849	923
NUP28/800-M1	–	1	179	–	**800**	980	106	5	5	–	849	923
NJ19/800-M1	–	1	282	–	**800**	1 060	115	6	6	12,8	870	968,4
NJ19/800-M1	**HJ19/800**	1	282	34,2	**800**	1 060	115	6	6	–	870	968,4
NJ19/800-M1A	–	1	282	–	**800**	1 060	115	6	6	12,8	870	968,4
NJ19/800-M1A	**HJ19/800**	1	282	34,2	**800**	1 060	115	6	6	–	870	968,4
NUP19/800-M1	–	1	288	–	**800**	1 060	115	6	6	–	870	968,4

[1] Under axial load, observe the dimensions D_1 and d_1.

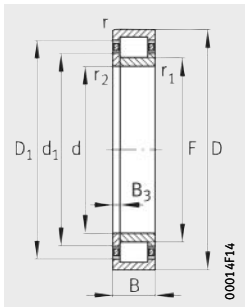

Design 2
NUP
Locating bearing

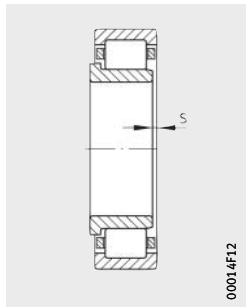

2) Axial displacement “s” for NJ

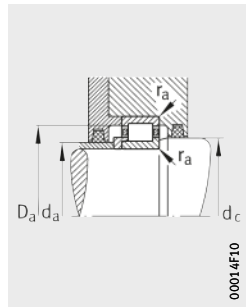

Mounting dimensions
for NJ and HJ
for NJ, page 377

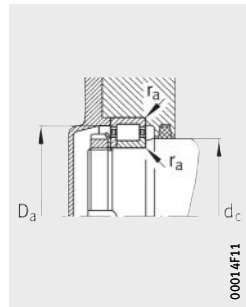

Mounting dimensions
for NUP

				Mounting dimensions						Basic load ratings		Fatigue limit load	Limiting speed	Reference speed
d_1	B_1	B_2	B_3	d_a		d_c	D_a	r_a	r_{a1}	dyn. C_r	stat. C_{0r}	C_{ur}	n_G	n_B
≈				min.[1]	max.	min.	max.[1]	max.	max.	kN	kN	kN	min^{-1}	min^{-1}
795,1	–	–	25	733	769	800	927	5	5	2 240	4 750	380	1 100	–
789,5	–	–	20	733	765	798	927	5	5	3 750	8 800	710	1 000	320
819,5	–	–	–	738	784	824	1 002	6	6	4 050	8 000	620	950	430
819,5	35	58	–	738	784	824	1 002	6	6	4 050	8 000	620	950	430
819,5	–	–	–	738	784	824	1 002	6	6	4 050	8 000	620	950	430
819,5	35	58	–	738	784	824	1 002	6	6	4 050	8 000	620	950	430
757,6	–	–	14	–	–	–	–	5	5	2 750	6 800	550	1 100	–
776,4	–	–	14	–	–	–	–	5	3	3 050	6 700	475	1 100	300
779,7	–	–	18,2	–	–	–	–	5	5	2 800	6 700	480	1 100	320
780,5	–	–	15,3	–	–	–	–	6	6	3 200	7 800	560	1 100	300
812,5	–	–	–	767	794	820	903	4	4	1 430	3 450	270	1 100	–
812,5	24	43	–	767	794	820	903	4	4	1 430	3 450	270	1 100	–
812,5	–	–	–	767	794	820	903	4	4	1 430	3 450	270	1 100	–
812,5	24	43	–	767	794	820	903	4	4	1 430	3 450	270	1 100	–
812,5	–	–	–	767	790	816	903	4	4	2 160	5 850	470	1 100	340
812,5	–	–	–	767	790	816	903	4	4	2 160	5 850	470	1 100	340
812,5	–	–	17,5	767	790	816	903	4	4	2 160	5 850	470	1 100	340
812,5	–	–	17,5	767	790	816	903	4	4	2 160	5 850	470	1 100	340
834,5	–	–	26	773	810	843	977	5	5	2 500	5 300	415	1 100	–
834,5	–	–	26	773	810	843	977	5	5	2 500	5 300	415	1 100	–
866	–	–	–	778	829	872	1 062	6	6	4 500	9 000	680	850	400
866	36	63,5	–	778	829	872	1 062	6	6	4 500	9 000	680	850	400
866	–	–	–	778	829	872	1 062	6	6	4 500	9 000	680	850	400
866	36	63,5	–	778	829	872	1 062	6	6	4 500	9 000	680	850	400
864	–	–	–	817	844	872	963	4	4	1 760	4 150	315	1 100	–
864	24,5	43	–	817	844	872	963	4	4	1 760	4 150	315	1 100	–
864	–	–	–	817	844	872	963	4	4	1 760	4 150	315	1 100	–
864	24,5	43	–	817	844	872	963	4	4	1 760	4 150	315	1 100	–
864	–	–	–	817	844	872	963	4	4	2 700	7 200	570	1 000	300
864	–	–	15,5	817	844	872	963	4	4	2 700	7 200	560	1 000	300
889,5	–	–	–	823	865	898	1 037	5	5	2 600	5 700	445	1 000	–
889,5	31,5	59	–	823	865	898	1 037	5	5	2 600	5 700	445	1 000	–
889,5	–	–	–	823	865	898	1 037	5	5	2 600	5 700	445	1 000	–
889,5	31,5	59	–	823	865	898	1 037	5	5	2 600	5 700	445	1 000	–
889,5	–	–	27,5	823	865	898	1 037	5	5	2 600	5 700	440	1 000	–

Cylindrical roller bearings with cage

Single row
Semi-locating and locating bearings

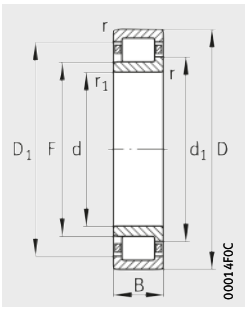

Design 1
NJ
Semi-locating bearing

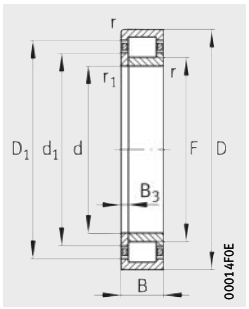

Design 1
NUP
Locating bearing

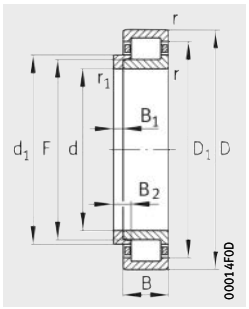

Design 1
NJ and HJ
Locating bearing

Dimension table (continued) · Dimensions in mm

Designation		De-sign	Mass m		Dimensions							
Bearing	L-section ring		Bearing ≈kg	L-section ring ≈kg	d	D	B	r min.	r_1 min.	s[2]	F	D_1 ≈
NUP19/800-M1A	–	1	288	–	**800**	1 060	115	6	6	–	870	968,4
NJ29/800-M1	–	1	383	–	**800**	1 060	150	6	6	13,3	865	969
NJ29/800-M1A	–	1	383	–	**800**	1 060	150	6	6	13,3	865	969
NUP29/800-M1	–	1	383	–	**800**	1 060	150	6	6	13,3	865	969
NJ10/800-M1	–	1	567	–	**800**	1 150	155	7,5	7,5	13,6	885	1 036
NJ10/800-M1	**HJ10/800**	1	567	56,5	**800**	1 150	155	7,5	7,5	–	885	1 036
NJ10/800-M1A	–	1	567	–	**800**	1 150	155	7,5	7,5	13,6	885	1 036
NJ10/800-M1A	**HJ10/800**	1	567	56,5	**800**	1 150	155	7,5	7,5	–	885	1 036
NJ18/850-M1	–	1	140	–	**850**	1 030	82	5	5	9	895	970
NJ18/850-M1	**HJ18/850**	1	140	18,5	**850**	1 030	82	5	5	–	895	970
NJ18/850-M1A	–	1	140	–	**850**	1 030	82	5	5	9	895	970
NJ18/850-M1A	**HJ18/850**	1	140	18,5	**850**	1 030	82	5	5	–	895	970
NJ28/850-M1	–	1	187	–	**850**	1 030	106	5	5	9,3	895	970
NJ28/850-M1	**HJ28/850**	1	187	18,4	**850**	1 030	106	5	5	–	895	970
NJ28/850-M1A	–	1	187	–	**850**	1 030	106	5	5	9,3	895	970
NJ28/850-M1A	**HJ28/850**	1	187	18,4	**850**	1 030	106	5	5	–	895	970
NUP28/850-M1	–	1	190	–	**850**	1 030	106	5	5	–	895	970
NUP28/850-M1A	–	1	190	–	**850**	1 030	106	5	5	–	895	970
NJ19/850-M1	–	1	321	–	**850**	1 120	118	6	6	12,6	921	1 024,1
NJ19/850-M1	**HJ19/850**	1	321	39,7	**850**	1 120	118	6	6	–	921	1 024,1
NJ29/850-M1	–	1	432	–	**850**	1 120	155	6	6	8,6	917	1 031,5
NJ29/850-M1A	–	1	432	–	**850**	1 120	155	6	6	8,6	917	1 031,5
NJ10/850-M1	–	1	669	–	**850**	1 220	165	7,5	7,5	13,5	945	1 096,2
NJ10/850-M1	**HJ10/850**	1	669	67,3	**850**	1 220	165	7,5	7,5	–	945	1 096,2
NJ18/900-M1	–	1	163	–	**900**	1 090	85	5	5	9	951	1 031
NJ18/900-M1	**HJ18/900**	1	163	21,8	**900**	1 090	85	5	5	–	951	1 031
NJ28/900-M1	–	1	220	–	**900**	1 090	112	5	5	9,5	951	1 031
NJ28/900-M1A	–	1	220	–	**900**	1 090	112	5	5	9,5	951	1 031
NUP28/900-M1	–	1	223	–	**900**	1 090	112	5	5	–	951	1 031
NUP28/900-M1A	–	1	223	–	**900**	1 090	112	5	5	–	951	1 031
NJ29/900-M1	–	1	504	–	**900**	1 180	165	6	6	13,3	970	1 088
NJ29/900-M1A	–	1	504	–	**900**	1 180	165	6	6	13,3	970	1 088

[1] Under axial load, observe the dimensions D_1 and d_1.

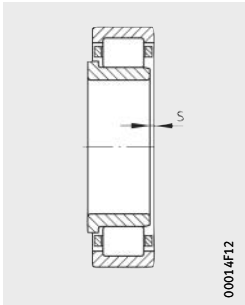

[2] Axial displacement “s” for NJ

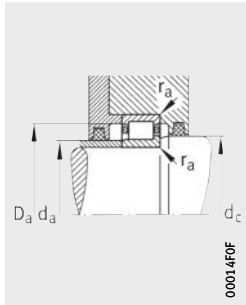

Mounting dimensions for NJ

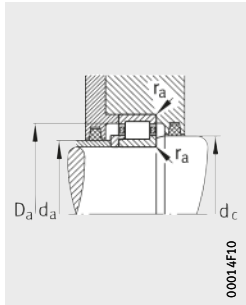

Mounting dimensions for NJ and HJ

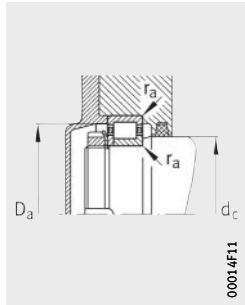

Mounting dimensions for NUP

				Mounting dimensions						Basic load ratings		Fatigue limit load	Limiting speed	Reference speed
d_1	B_1	B_2	B_3	d_a		d_c	D_a	r_a	r_{a1}	dyn. C_r	stat. C_{0r}	C_{ur}	n_G	n_B
≈				min.[1]	max.	min.	max.[1]	max.	max.	kN	kN	kN	min^{-1}	min^{-1}
889,5	–	–	27,5	823	865	898	1 037	5	5	2 600	5 700	440	1 000	–
886	–	–	–	823	860	895	1 037	5	5	4 250	10 000	780	900	280
886	–	–	–	823	860	895	1 037	5	5	4 250	10 000	780	900	280
886	–	–	22,5	823	860	895	1 037	5	5	4 250	10 000	780	900	280
918	–	–	–	828	879	924	1 122	6	6	5 000	10 000	750	800	360
918	38	65,5	–	828	879	924	1 122	6	6	5 000	10 000	750	800	360
918	–	–	–	828	879	924	1 122	6	6	5 000	10 000	750	800	360
918	38	65,5	–	828	879	924	1 122	6	6	5 000	10 000	750	800	360
910	–	–	–	867	894	922	1 013	4	4	1 800	4 400	330	1 000	–
910	24,5	43	–	867	894	922	1 013	4	4	1 800	4 400	330	1 000	–
910	–	–	–	867	894	922	1 013	4	4	1 800	4 400	330	1 000	–
910	24,5	43	–	867	894	922	1 013	4	4	1 800	4 400	330	1 000	–
910	–	–	–	867	890	918	1 013	4	4	2 750	7 650	590	950	280
910	25	40,5	–	867	890	918	1 013	4	4	2 750	7 650	590	950	280
910	–	–	–	867	890	918	1 013	4	4	2 750	7 650	590	950	280
910	25	40,5	–	867	890	918	1 013	4	4	2 750	7 650	590	950	280
910	–	–	15,5	867	890	918	1 013	4	4	2 750	7 650	590	950	280
910	–	–	15,5	867	890	918	1 013	4	4	2 750	7 650	590	950	280
941,5	–	–	–	873	916	950	1 097	5	5	2 900	6 400	490	950	–
941,5	34	61	–	873	916	950	1 097	5	5	2 900	6 400	490	950	–
939	–	–	–	873	912	948	1 097	5	5	4 750	11 600	890	850	260
939	–	–	–	873	912	948	1 097	5	5	4 750	11 600	890	850	260
978	–	–	–	878	938	984	1 192	6	6	5 600	11 800	890	750	320
978	40	67,5	–	878	938	984	1 192	6	6	5 600	11 800	890	750	320
967	–	–	–	917	946	975	1 073	4	4	2 040	5 100	370	950	–
967	24,5	43	–	917	946	975	1 073	4	4	2 040	5 100	370	950	–
967	–	–	–	917	946	975	1 073	4	4	3 100	8 800	660	850	260
967	–	–	–	917	946	975	1 073	4	4	3 100	8 800	660	850	260
967	–	–	15,5	917	946	975	1 073	4	4	3 100	8 800	660	850	260
967	–	–	15,5	917	946	975	1 073	4	4	3 100	8 800	660	850	260
992	–	–	–	923	965	1 003	1 157	5	5	5 400	13 400	1 010	800	220
992	–	–	–	923	965	1 003	1 157	5	5	5 400	13 400	1 010	800	220

Cylindrical roller bearings with cage

Single row
Semi-locating and locating bearings

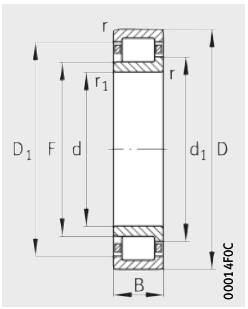

Design 1
NJ
Semi-locating bearing

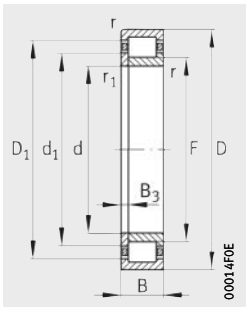

Design 1
NUP
Locating bearing

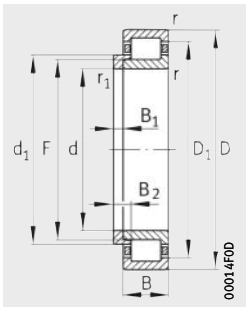

Design 1
NJ and HJ
Locating bearing

Dimension table (continued) · Dimensions in mm

Designation		De-sign	Mass m		Dimensions							
Bearing	L-section ring		Bearing ≈kg	L-section ring ≈kg	d	D	B	r min.	r_1 min.	$s^{2)}$	F	D_1 ≈
NJ10/900-M1	–	1	740	–	**900**	1 280	170	7,5	7,5	13,5	990	1 158
NJ10/900-M1	**HJ10/900**	1	740	75,5	**900**	1 280	170	7,5	7,5	–	990	1 158
NJ18/950-M1	–	1	192	–	**950**	1 150	90	5	5	9,5	1 004	1 088
NJ18/950-M1	**HJ18/950**	1	192	26,3	**950**	1 150	90	5	5	–	1 004	1 088
NJ28/950-M1	–	1	261	–	**950**	1 150	118	5	5	9,8	1 004	1 088
NUP28/950-M1	–	1	265	–	**950**	1 150	118	5	5	–	1 004	1 088
NJ29/950-M1	–	1	603	–	**950**	1 250	175	7,5	7,5	14,5	1 025	1 151
NJ10/950-M1	–	1	911	–	**950**	1 360	180	7,5	7,5	13,5	1 055	1 223
NJ10/950-M1	**HJ10/950**	1	911	91,7	**950**	1 360	180	7,5	7,5	–	1 055	1 223
NJ18/1000-M	–	1	247	–	**1 000**	1 220	100	6	6	10,3	1 058	1 150
NJ18/1000-M	**HJ18/1000**	1	247	33,6	**1 000**	1 220	100	6	6	–	1 058	1 150
NUP18/1000-M	–	1	252	–	**1 000**	1 220	100	6	6	–	1 058	1 150
NJ28/1000-M	–	1	328	–	**1 000**	1 220	128	6	6	11	1 058	1 150
NUP28/1000-M	–	1	332	–	**1 000**	1 220	128	6	6	–	1 058	1 150
NUP28/1000-MA	–	1	332	–	**1 000**	1 220	128	6	6	–	1 058	1 150
NJ10/1000-M1	–	1	1 030	–	**1 000**	1 420	185	7,5	7,5	14,5	1 105	1 281
NJ10/1000-M1	**HJ10/1000**	1	1 030	103	**1 000**	1 420	185	7,5	7,5	–	1 105	1 281
NJ18/1060-M	–	1	264	–	**1 060**	1 280	100	6	6	10,3	1 118	1 210
NJ18/1060-M	**HJ18/1060**	1	264	37,6	**1 060**	1 280	100	6	6	–	1 118	1 210
NJ28/1060-M	–	1	346	–	**1 060**	1 280	128	6	6	11	1 118	1 210
NUP28/1060-M	–	1	350	–	**1 060**	1 280	128	6	6	–	1 118	1 210
NJ10/1060-M1	–	1	1 160	–	**1 060**	1 500	195	9,5	9,5	14,5	1 170	1 355
NJ10/1060-M1	**HJ10/1060**	1	1 160	121	**1 060**	1 500	195	9,5	9,5	–	1 170	1 355
F-801007.ZL	–	1	324	–	**1 120**	1 360	106	6	6	11	1 185	1 286
NJ18/1120-M	–	1	318	–	**1 120**	1 360	106	6	6	11	1 185	1 286
NJ18/1120-M	**HJ18/1120**	1	318	46,4	**1 120**	1 360	106	6	6	–	1 185	1 286
NJ18/1120-MA	–	1	318	–	**1 120**	1 360	106	6	6	11	1 185	1 286
NJ18/1120-MA	**HJ18/1120**	1	318	46,4	**1 120**	1 360	106	6	6	–	1 185	1 286
NJ28/1120-M	–	1	434	–	**1 120**	1 360	140	6	6	13,1	1 185	1 286
NUP28/1120-M	–	1	441	–	**1 120**	1 360	140	6	6	–	1 185	1 286
NJ10/1120-M1	–	1	1 320	–	**1 120**	1 580	200	9,5	9,5	16	1 235	1 428
NJ10/1120-M1	**HJ10/1120**	1	1 320	138	**1 120**	1 580	200	9,5	9,5	–	1 235	1 428

1) Under axial load, observe the dimensions D_1 and d_1.

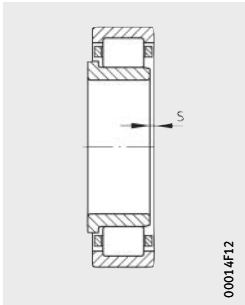

[2] Axial displacement “s” for NJ

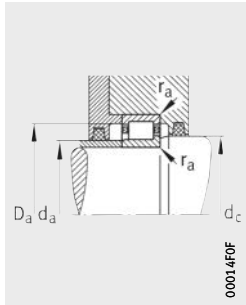

Mounting dimensions for NJ

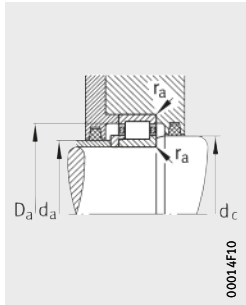

Mounting dimensions for NJ and HJ

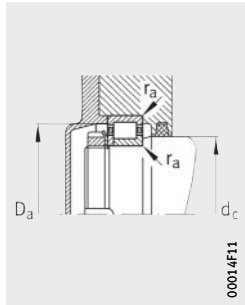

Mounting dimensions for NUP

				Mounting dimensions						Basic load ratings		Fatigue limit load	Limiting speed	Reference speed
d_1	B_1	B_2	B_3	d_a		d_c	D_a	r_a	r_{a1}	dyn. C_r	stat. C_{0r}	C_{ur}	n_G	n_B
≈				min.[1]	max.	min.	max.[1]	max.	max.	kN	kN	kN	min^{-1}	min^{-1}
1 026	–	–	–	928	983	1 033	1 252	6	6	6 400	13 400	970	700	300
1 026	43	70,5	–	928	983	1 033	1 252	6	6	6 400	13 400	970	700	300
1 020	–	–	–	967	999	1 029	1 133	4	4	2 200	5 500	405	900	–
1 020	27	47	–	967	999	1 029	1 133	4	4	2 200	5 500	405	900	–
1 020	–	–	–	967	999	1 029	1 133	4	4	3 400	9 800	740	800	240
1 020	–	–	16,5	967	999	1 029	1 133	4	4	3 400	9 800	740	800	240
1 049	–	–	–	978	1 020	1 060	1 222	6	6	5 850	14 600	1 090	750	220
1 091	–	–	–	978	1 048	1 098	1 332	6	6	7 200	15 600	1 120	700	260
1 091	45	72,5	–	978	1 048	1 098	1 332	6	6	7 200	15 600	1 120	700	260
1 076	–	–	–	1 023	1 053	1 085	1 197	5	5	2 450	5 850	435	850	–
1 076	30	52	–	1 023	1 053	1 085	1 197	5	5	2 450	5 850	435	850	–
1 076	–	–	22	1 023	1 053	1 085	1 197	5	5	2 450	5 850	430	850	–
1 076	–	–	–	1 023	1 053	1 085	1 197	5	5	3 650	10 000	750	750	220
1 076	–	–	19	1 023	1 053	1 085	1 197	5	5	3 650	10 000	750	750	220
1 076	–	–	19	1 023	1 053	1 085	1 197	5	5	3 650	10 000	750	750	220
1 143	–	–	–	1 028	1 098	1 150	1 392	6	6	7 500	16 300	1 150	630	260
1 143	47	77	–	1 028	1 098	1 150	1 392	6	6	7 500	16 300	1 150	630	260
1 136	–	–	–	1 083	1 113	1 145	1 257	5	5	2 550	6 400	465	800	–
1 136	32	54	–	1 083	1 113	1 145	1 257	5	5	2 550	6 400	465	800	–
1 136	–	–	–	1 083	1 113	1 145	1 257	5	5	3 800	10 600	790	700	220
1 136	–	–	19	1 083	1 113	1 145	1 257	5	5	3 800	10 600	780	700	220
1 210	–	–	–	1 094	1 163	1 217	1 466	8	8	8 500	18 600	1 300	600	220
1 210	50	80	–	1 094	1 163	1 217	1 466	8	8	8 500	18 600	1 300	600	220
1 204	–	–	–	1 143	1 180	1 214	1 337	5	5	2 850	7 100	500	750	–
1 204	–	–	–	1 143	1 180	1 214	1 337	5	5	2 850	7 100	500	750	–
1 204	34	57	–	1 143	1 180	1 214	1 337	5	5	2 850	7 100	500	750	–
1 204	–	–	–	1 143	1 180	1 214	1 337	5	5	2 850	7 100	500	750	–
1 204	34	57	–	1 143	1 180	1 214	1 337	5	5	2 850	7 100	500	750	–
1 204	–	–	–	1 143	1 180	1 214	1 337	5	5	4 150	11 600	840	700	200
1 204	–	–	22,5	1 143	1 180	1 214	1 337	5	5	4 150	11 600	840	700	200
1 276	–	–	–	1 154	1 228	1 283	1 546	8	8	9 000	20 000	1 380	560	220
1 276	52	84,5	–	1 154	1 228	1 283	1 546	8	8	9 000	20 000	1 380	560	220

Cylindrical roller bearings with cage

Single row
Semi-locating and locating bearings

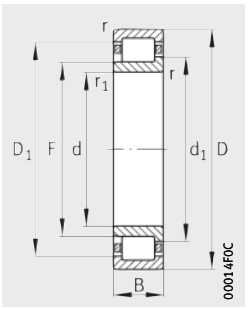

Design 1
NJ
Semi-locating bearing

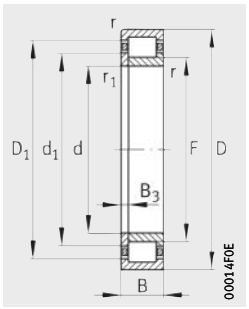

Design 1
NUP
Locating bearing

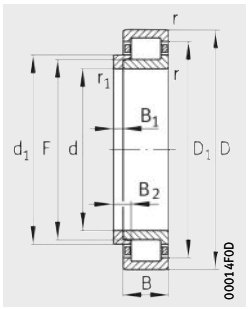

Design 1
NJ and HJ
Locating bearing

Dimension table (continued) · Dimensions in mm

Designation		De-sign	Mass m		Dimensions							
Bearing	L-section ring		Bearing ≈kg	L-section ring ≈kg	d	D	B	r min.	r_1 min.	$s^{2)}$	F	D_1 ≈
NJ18/1180-M	–	1	339	–	**1 180**	1 420	106	6	6	11	1 245	1 346
NJ18/1180-M	**HJ18/1180**	1	339	48,8	**1 180**	1 420	106	6	6	–	1 245	1 346
NJ18/1180-MA	–	1	339	–	**1 180**	1 420	106	6	6	11	1 245	1 346
NJ18/1180-MA	**HJ18/1180**	1	339	48,8	**1 180**	1 420	106	6	6	–	1 245	1 346
NJ28/1180-M	–	1	460	–	**1 180**	1 420	140	6	6	13,1	1 245	1 346
NUP28/1180-M	–	1	467	–	**1 180**	1 420	140	6	6	–	1 245	1 346
NJ10/1180-M1	–	1	1 540	–	**1 180**	1 660	212	9,5	9,5	17	1 300	1 502
NJ10/1180-M1	**HJ10/1180**	1	1 540	158	**1 180**	1 660	212	9,5	9,5	–	1 300	1 502
NJ18/1250-M	–	1	398	–	**1 250**	1 500	112	6	6	11,4	1 316	1 423,3
NJ18/1250-M	**HJ18/1250**	1	398	57,1	**1 250**	1 500	112	6	6	–	1 316	1 423,3
NJ18/1250-MA	–	1	398	–	**1 250**	1 500	112	6	6	11,4	1 316	1 423,3
NJ18/1250-MA	**HJ18/1250**	1	398	57,1	**1 250**	1 500	112	6	6	–	1 316	1 423,3
NJ28/1250-M	–	1	523	–	**1 250**	1 500	145	6	6	13,1	1 316	1 423,3
NUP28/1250-M	–	1	531	–	**1 250**	1 500	145	6	6	–	1 316	1 423,3
NJ10/1250-M1	–	1	1 730	–	**1 250**	1 750	218	9,5	9,5	18,5	1 375	1 585
NJ10/1250-M1	**HJ10/1250**	1	1 730	183	**1 250**	1 750	218	9,5	9,5	–	1 375	1 585
NJ18/1320-M	–	1	506	–	**1 320**	1 600	122	6	6	12,8	1 397	1 511
NJ18/1320-M	**HJ18/1320**	1	506	75,8	**1 320**	1 600	122	6	6	–	1 397	1 511
NJ18/1320-MA	–	1	506	–	**1 320**	1 600	122	6	6	12,8	1 397	1 511
NJ18/1320-MA	**HJ18/1320**	1	506	75,8	**1 320**	1 600	122	6	6	–	1 397	1 511
NJ28/1320-M	–	1	713	–	**1 320**	1 600	165	6	6	15,8	1 397	1 511
NUP28/1320-M	–	1	724	–	**1 320**	1 600	165	6	6	–	1 397	1 511
NJ10/1320-M1	–	1	2 070	–	**1 320**	1 850	230	12	12	19	1 455	1 673
NJ10/1320-M1	**HJ10/1320**	1	2 070	217	**1 320**	1 850	230	12	12	–	1 455	1 673
NJ18/1400-M	–	1	636	–	**1 400**	1 700	132	7,5	7,5	13,4	1 480	1 606
NJ18/1400-MA	–	1	636	–	**1 400**	1 700	132	7,5	7,5	13,4	1 480	1 606
NJ28/1400-M	–	1	861	–	**1 400**	1 700	175	7,5	7,5	17	1 480	1 606
NUP28/1400-M	–	1	874	–	**1 400**	1 700	175	7,5	7,5	–	1 480	1 606
NJ10/1400-M1	–	1	2 390	–	**1 400**	1 950	243	12	12	19,5	1 540	1 767
NJ10/1400-M1	**HJ10/1400**	1	2 390	252	**1 400**	1 950	243	12	12	–	1 540	1 767

1) Under axial load, observe the dimensions D_1 and d_1.

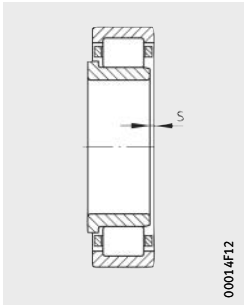

[2] Axial displacement “s” for NJ

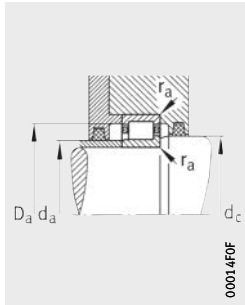

Mounting dimensions for NJ

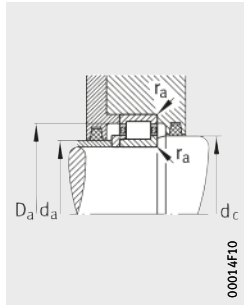

Mounting dimensions for NJ and HJ

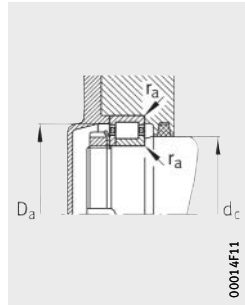

Mounting dimensions for NUP

				Mounting dimensions						Basic load ratings		Fatigue limit load	Limiting speed	Reference speed
d_1	B_1	B_2	B_3	d_a		d_c	D_a	r_a	r_{a1}	dyn. C_r	stat. C_{0r}	C_{ur}	n_G	n_B
≈				min.[1]	max.	min.	max.[1]	max.	max.	kN	kN	kN	min^{-1}	min^{-1}
1 264	–	–	–	1 203	1 240	1 274	1 397	5	5	3 000	7 800	540	700	–
1 264	34	57	–	1 203	1 240	1 274	1 397	5	5	3 000	7 800	540	700	–
1 264	–	–	–	1 203	1 240	1 274	1 397	5	5	3 000	7 800	540	700	–
1 264	34	57	–	1 203	1 240	1 274	1 397	5	5	3 000	7 800	540	700	–
1 264	–	–	–	1 203	1 240	1 274	1 397	5	5	4 400	12 900	910	630	180
1 264	–	–	22,5	1 203	1 240	1 274	1 397	5	5	4 400	12 900	910	630	180
1 343	–	–	–	1 214	1 293	1 350	1 626	8	8	10 000	22 800	1 500	560	200
1 343	54	87,5	–	1 214	1 293	1 350	1 626	8	8	10 000	22 800	1 500	560	200
1 337	–	–	–	1 273	1 311	1 347	1 477	5	5	3 350	8 650	590	700	–
1 337	36	60	–	1 273	1 311	1 347	1 477	5	5	3 350	8 650	590	700	–
1 337	–	–	–	1 273	1 311	1 347	1 477	5	5	3 350	8 650	590	700	–
1 337	36	60	–	1 273	1 311	1 347	1 477	5	5	3 350	8 650	590	700	–
1 337	–	–	–	1 273	1 311	1 347	1 477	5	5	5 000	14 300	1 010	600	170
1 337	–	–	22,5	1 273	1 311	1 347	1 477	5	5	5 000	14 300	1 010	600	170
1 419	–	–	–	1 284	1 368	1 427	1 716	8	8	10 600	24 500	1 590	530	180
1 419	57	93,5	–	1 284	1 368	1 427	1 716	8	8	10 600	24 500	1 590	530	180
1 419	–	–	–	1 243	1 392	1 429	1 577	5	5	3 800	10 200	670	630	–
1 419	40	67	–	1 243	1 392	1 429	1 577	5	5	3 800	10 200	670	630	–
1 419	–	–	–	1 243	1 392	1 429	1 577	5	5	3 800	10 200	670	630	–
1 419	40	67	–	1 243	1 392	1 429	1 577	5	5	3 800	10 200	670	630	–
1 419	–	–	–	1 343	1 392	1 429	1 577	5	5	5 700	17 000	1 150	560	150
1 419	–	–	27,5	1 343	1 392	1 429	1 577	5	5	5 700	17 000	1 150	560	150
1 501	–	–	–	1 362	1 448	1 509	1 808	10	10	11 800	27 000	1 750	500	170
1 501	60	97,5	–	1 362	1 448	1 509	1 808	10	10	11 800	27 000	1 750	500	170
1 504	–	–	–	1 428	1 475	1 515	1 672	6	6	4 550	12 000	780	600	–
1 504	–	–	–	1 428	1 475	1 515	1 672	6	6	4 550	12 000	780	600	–
1 504	–	–	–	1 428	1 475	1 515	1 672	6	6	6 550	19 300	1 280	530	140
1 504	–	–	30	1 428	1 475	1 515	1 672	6	6	6 550	19 300	1 280	530	140
1 587	–	–	–	1 442	1 533	1 595	1 908	10	10	13 200	31 000	1 980	480	150
1 587	63	102	–	1 442	1 533	1 595	1 908	10	10	13 200	31 000	1 980	480	150

Cylindrical roller bearings with cage

Single row
Semi-locating and locating bearings

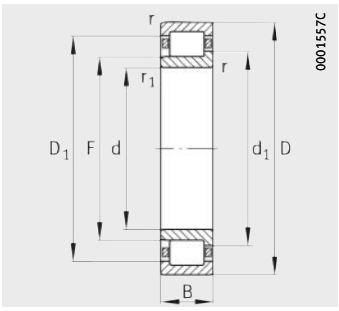

Design 1
NJ
Semi-locating bearing

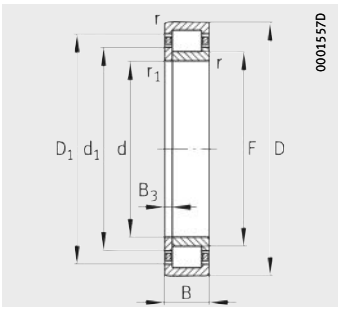

Design 1
NUP
Locating bearing

Dimension table (continued) · Dimensions in mm

Designation Bearing	Design	Mass m Bearing ≈kg	Dimensions d	D	B	r min.	r_1 min.	s[2]	F	D_1 ≈	d_1 ≈	B_3
NJ18/1500-M	1	765	**1 500**	1 820	140	7,5	7,5	14,5	1 585	1 719	1 611	–
NJ28/1500-M	1	1 030	**1 500**	1 820	185	7,5	7,5	19,3	1 585	1 719	1 611	–
NUP28/1500-M	1	1 040	**1 500**	1 820	185	7,5	7,5	–	1 585	1 719	1 611	32,5
NJ18/1600-M	1	1 000	**1 600**	1 950	155	7,5	7,5	15,5	1 690	1 841	1 719	–
NJ28/1600-M	1	1 300	**1 600**	1 950	200	7,5	7,5	20	1 690	1 841	1 719	–
NJ28/1600-MA	1	1 300	**1 600**	1 950	200	7,5	7,5	20	1 690	1 841	1 719	–
NUP28/1600-M	1	1 320	**1 600**	1 950	200	7,5	7,5	–	1 690	1 841	1 719	35
NUP28/1600-MA	1	1 320	**1 600**	1 950	200	7,5	7,5	–	1 690	1 841	1 719	35
NJ18/1700-M	1	1 100	**1 700**	2 060	160	7,5	7,5	15,5	1 790	1 950	1 820	–
NJ18/1700-MA	1	1 100	**1 700**	2 060	160	7,5	7,5	15,5	1 790	1 950	1 820	–
NUP18/1700-MA	1	1 130	**1 700**	2 060	160	7,5	7,5	–	1 790	1 950	1 820	32,5
NJ18/1800-M	1	1 270	**1 800**	2 180	165	9,5	9,5	13	1 895	2 063	1 927	–
NJ18/1800-MA	1	1 270	**1 800**	2 180	165	9,5	9,5	13	1 895	2 063	1 927	–
NJ28/1800-M	1	1 720	**1 800**	2 180	218	9,5	9,5	17	1 895	2 063	1 927	–
NJ28/1800-MA	1	1 720	**1 800**	2 180	218	9,5	9,5	17	1 895	2 063	1 927	–
NJ18/1900-M	1	1 500	**1 900**	2 300	175	9,5	9,5	17	2 000	2 176	2 034	–
NJ18/2000-M	1	1 890	**2 000**	2 430	190	9,5	9,5	19	2 110	2 295	2 147	–

[1] Under axial load, observe the dimensions D_1 and d_1.

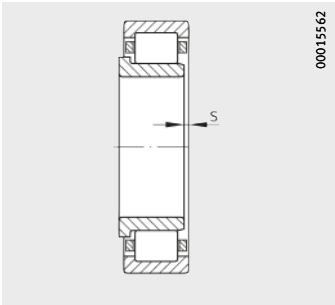

[2] Axial displacement “s” for NJ

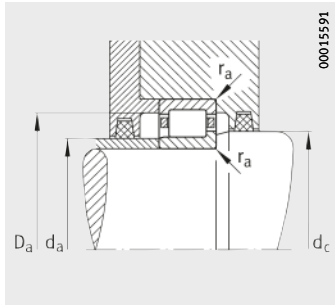

Mounting dimensions for NJ

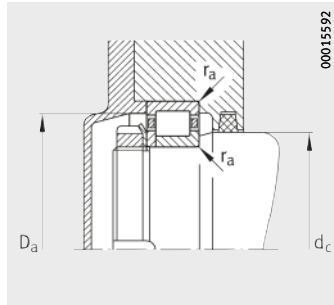

Mounting dimensions for NUP

Mounting dimensions						Basic load ratings		Fatigue limit load	Limiting speed	Reference speed
d_a		d_c	D_a	r_a	r_{a1}	dyn. C_r	stat. C_{0r}	C_{ur}	n_G	n_B
min.[1]	max.	min.	max.[1]	max.	max.	kN	kN	kN	min^{-1}	min^{-1}
1 528	1 580	1 619	1 792	6	6	5 200	14 000	870	560	–
1 528	1 580	1 619	1 792	6	6	7 350	21 600	1 390	500	130
1 528	1 580	1 619	1 792	6	6	7 350	21 600	1 380	500	130
1 628	1 685	1 727	1 922	6	6	6 200	16 300	1 020	530	–
1 628	1 685	1 727	1 922	6	6	8 300	24 000	1 540	480	120
1 628	1 685	1 727	1 922	6	6	8 300	24 000	1 540	480	120
1 628	1 685	1 727	1 922	6	6	8 300	24 000	1 540	480	120
1 628	1 685	1 727	1 922	6	6	8 300	24 000	1 540	480	120
1 728	1 785	1 829	2 032	6	6	6 950	18 600	1 150	500	–
1 728	1 785	1 829	2 032	6	6	6 950	18 600	1 150	500	–
1 728	1 785	1 829	2 032	6	6	6 950	18 600	1 140	500	–
1 834	1 890	1 936	2 146	8	8	7 800	20 800	1 260	480	–
1 834	1 890	1 936	2 146	8	8	7 800	20 800	1 260	480	–
1 834	1 890	1 936	2 146	8	8	11 400	34 500	2 130	450	90
1 834	1 890	1 936	2 146	8	8	11 400	34 500	2 130	450	90
1 934	1 995	2 042	2 266	8	8	8 500	23 200	1 370	450	–
2 034	2 105	2 154	2 396	8	8	9 300	26 000	1 520	450	–

Cylindrical roller bearings with disc cage

Single row
Semi-locating bearings

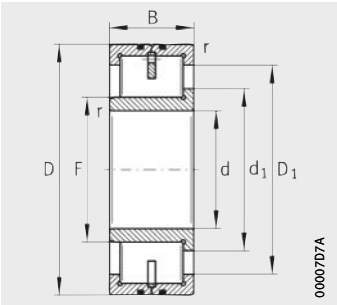

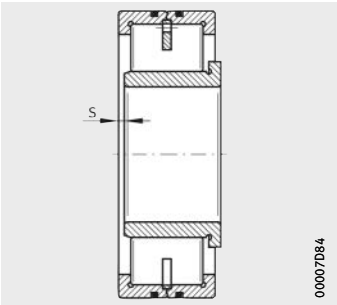

1) Axial displacement “s”

Dimension table · Dimensions in mm

Designation	Mass	Dimensions					
	m	d	D	B	r	s[1)]	F
	≈kg				min.		
LSL192330-TB	40,7	**150**	320	108	4	7	182,49
LSL192332-TB	48,1	**160**	340	114	4	7	196,38
LSL192334-TB	57,5	**170**	360	120	4	7	230,55
LSL192336-TB	67,4	**180**	380	126	4	7	221,56
LSL192338-TB	78,1	**190**	400	132	5	7	224,43
LSL192340-TB	89,3	**200**	420	138	5	7	238,45
LSL192344-TB	108	**220**	460	145	5	7	266,71
LSL192348-TB	138,6	**240**	500	155	5	10	280,55
LSL192352-TB	168	**260**	540	165	6	10	315,6
LSL192356-TB	206,6	**280**	580	175	6	12	333,1
LSL192360-TB	253	**300**	620	185	7,5	12	350,93

		Basic load ratings		Fatigue limit load	Limiting speed	Reference speed
d_1	D_1	dyn. C_r	stat. C_{0r}	C_{ur}	n_G	n_B
≈	≈	kN	kN	kN	min^{-1}	min^{-1}
203,3	263,9	1 410	1 760	199	4 250	2 020
219	284,8	1 600	2 010	224	3 950	1 820
226,6	295,4	1 740	2 210	241	3 800	1 760
245	313,3	1 840	2 430	260	3 600	1 620
250	325,5	2 100	2 750	295	3 450	1 540
265,7	345,9	2 340	3 050	315	3 250	1 420
297	385,9	2 500	3 200	320	2 900	1 270
312,5	406,1	2 750	3 550	350	2 750	1 220
351,6	457,2	3 350	4 350	425	2 470	1 010
371	485	3 700	4 850	460	2 330	950
390,9	508,5	4 150	5 500	510	2 220	890

Super precision cylindrical roller bearings

Single row,
with tapered bore
(taper 1:12)
Non-locating bearings

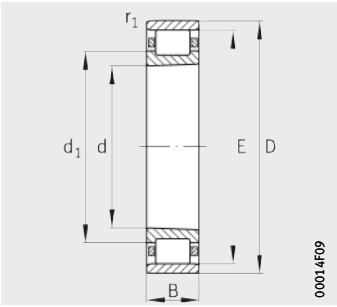

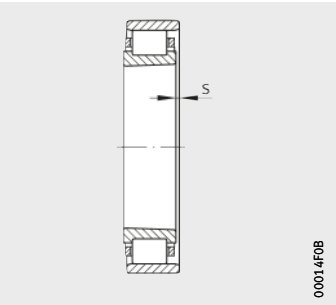

1) Axial displacement “s”

Dimension table · Dimensions in mm

Designation	Mass	Dimensions						
	m	d	D	B	r_1	s[1)]	E	d_1
	≈kg				min.			
N1044-K-M1-SP	21,8	**220**	340	56	3	8	310	261,7
N1948-K-M1-SP	8,18	**240**	320	38	2,1	3,5	299	268,5
N1048-K-M1-SP	19,3	**240**	360	56	3	8	330	281,7
N1952-K-M1-SP	13,8	**260**	360	46	2,1	3,8	334	295,4
N1052-K-M1-SP	28,8	**260**	400	65	4	10	364	309,3
N1956-K-M1-SP	14,6	**280**	380	46	2,1	5,4	354	315,4
N1056-K-M1-SP	30,5	**280**	420	65	4	10	384	329,3
N1960-K-M1-SP	23,6	**300**	420	56	3	4,8	390	341,6
N1060-K-M1-SP	43,3	**300**	460	74	4	10	420	355,7
N1964-K-M1-SP	24,9	**320**	440	56	3	4,8	410	361,7
N1064-K-M1-SP	45,7	**320**	480	74	4	10	440	375,7
N1968-K-M1-SP	26,3	**340**	460	56	3	4,8	430	381,6
N1068-K-M1-SP	60,7	**340**	520	82	5	12	475	402,7
N1972-K-M1-SP	26,9	**360**	480	56	3	4,8	450	401,6
N1072-K-M1-SP	64,4	**360**	540	82	5	8,9	495	421,6
N1976-K-M1-SP	40	**380**	520	65	4	6	484	429,1
N1076-K-M1-SP	66,6	**380**	560	82	5	12	515	441,6
N1980-K-M1-SP	41	**400**	540	65	4	6	504	449,1
N1080-K-M1-SP	88,1	**400**	600	90	5	9,5	550	469,7
N1984-K-M1-SP	42,9	**420**	560	65	4	6	524	469,1
N1084-K-M1-SP	90,7	**420**	620	90	5	12,5	570	489,7
N1988-K-M1-SP	60,2	**440**	600	74	4	6,5	558	496,6
N1088-K-M1-SP	106	**440**	650	94	6	13	597	513,5
N1992-K-M1-SP	61,1	**460**	620	74	4	6,5	578	516,6
N1092-K-M1-SP	120	**460**	680	100	6	14	624	536,5
N1996-K-M1-SP	73,1	**480**	650	78	5	6,8	605	540
N1096-K-M1-SP	125	**480**	700	100	6	14	644	556,4
N19/500-K-M1-SP	74,5	**500**	670	78	5	6,8	625	560
N10/500-K-M1-SP	130	**500**	720	100	6	14	664	576,5

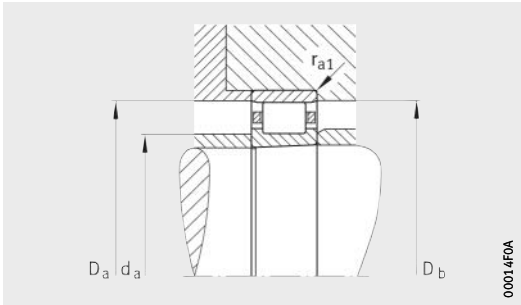

Mounting dimensions

Mounting dimensions				Basic load ratings		Fatigue limit load	Limiting speeds	
d_a h12	D_a H12	D_b min.	r_{a1} max.	dyn. C_r kN	stat. C_{0r} kN	C_{ur} kN	n_G grease min^{-1}	n_G Oil min^{-1}
232,4	328	313	2,5	510	765	100	2 400	2 800
250,5	309	302	2	280	490	62	2 400	2 800
252,5	348	333	2,5	540	850	107	2 200	2 600
270,5	349	337	2	425	735	73	2 000	2 400
275	385	367	3	655	1 020	104	1 900	2 200
290,5	369	357	2	440	800	78	1 900	2 200
295	405	387	3	430	980	225	1 800	2 000
312,5	408	394	2,5	600	1 020	123	1 700	1 900
315	445	424	3	900	1 430	173	1 600	1 800
332,5	428	414	2,5	620	1 100	130	1 600	1 800
335	465	444	3	915	1 500	178	1 500	1 700
352,5	448	434	2,5	655	1 200	140	1 500	1 700
358	503	479	4	1 120	1 830	211	1 400	1 600
372,5	468	454	2,5	655	1 220	142	1 400	1 600
378	523	499	4	1 140	1 900	217	1 300	1 500
395	505	488	3	815	1 500	175	1 300	1 500
398	543	519	4	1 180	2 000	224	1 300	1 500
415	525	509	3	800	1 500	140	1 300	1 500
418	583	555	4	1 370	2 320	260	1 200	1 400
435	545	529	3	830	1 600	182	1 200	1 400
438	603	575	4	1 400	2 450	270	1 100	1 300
455	585	563	3	1 020	1 960	216	1 100	1 300
463	627	602	5	1 560	2 750	300	1 100	1 300
475	605	583	3	1 020	1 960	214	1 100	1 300
483	657	629	5	1 660	3 000	325	1 000	1 200
498	633	610	4	1 140	2 240	243	1 000	1 200
503	677	649	5	1 700	3 100	330	950	1 100
518	653	631	4	1 160	2 320	247	1 000	1 200
523	697	670	5	1 760	3 200	340	950	1 100

FAG

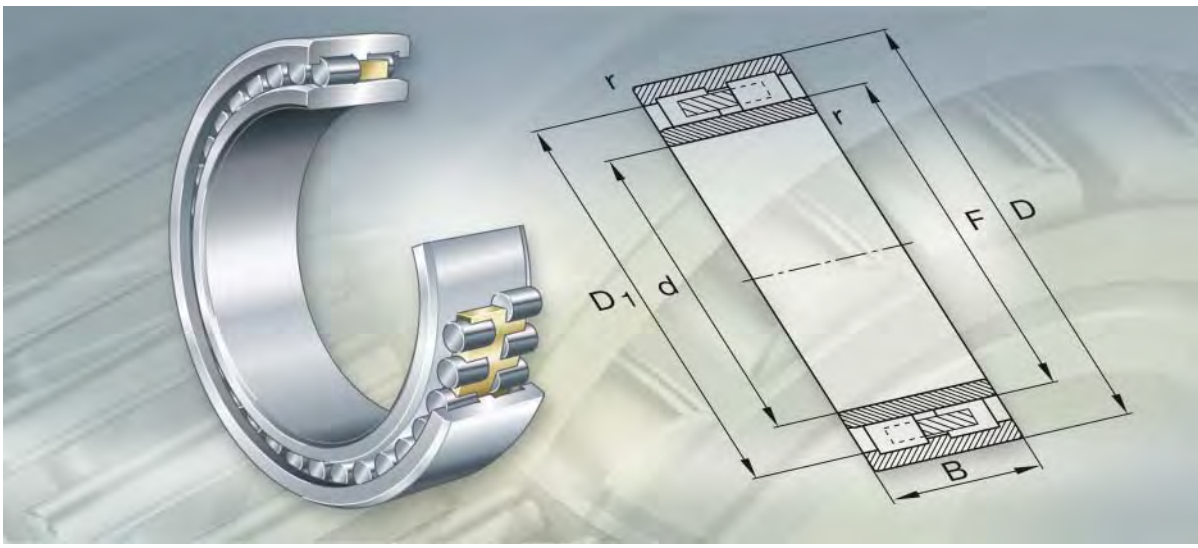

Double row cylindrical roller bearings with cage

Double row cylindrical roller bearings with cage

		Page
Product overview	Double row cylindrical roller bearings with cage	390
Features	Double row cylindrical roller bearings with cylindrical bore	391
	Double row cylindrical roller bearings with tapered bore	394
	Non-locating bearings	394
	Axial displacement	394
	Sealing	395
	Lubrication	395
	Operating temperature	395
	Cages	395
	Suffixes	395
Design and safety guidelines	Permissible skewing	396
	Minimum radial load	396
	Equivalent dynamic bearing load	396
	Operating life of high precision bearings	396
	Equivalent static bearing load	397
	Static load safety factor of high precision bearings	397
	Speeds of high precision bearings	397
	Design of bearing arrangements	397
	Tapered shafts for high precision bearings	398
	Housings for high precision bearings	400
Accuracy	Radial internal clearance	402
Dimension tables	Cylindrical roller bearings with cage, double row, with cylindrical bore	404
	Super precision cylindrical roller bearings, double row, with tapered bore	410



Double row cylindrical roller bearings with cage

Non-locating bearings

With cylindrical bore

NNU40, NNU48, NNU49, Z-5..ZL2-01

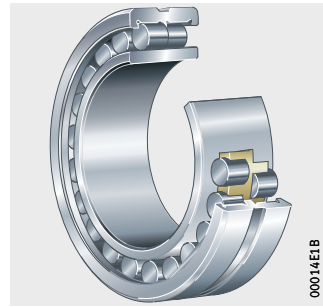

NNU41, Z-5..ZL2-01

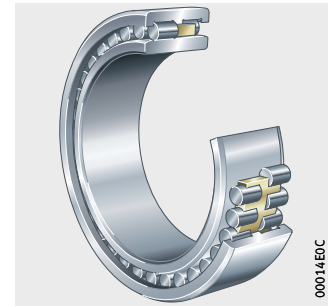

With tapered bore

NN30..-AS-K-M-SP

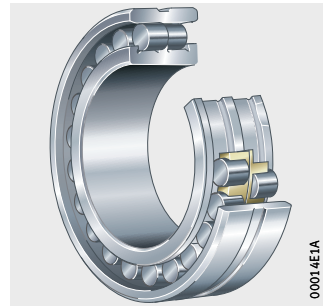

NNU49..-S-K-M-SP

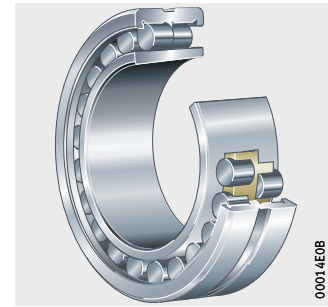

Double row cylindrical roller bearings with cage

Features

These double row cylindrical roller bearings comprise solid bearing rings and cylindrical roller and cage assemblies with solid cages.

The bearings are suitable for very high radial loads and high speeds. They are separable and are therefore easier to mount and dismount. As a result, both bearing rings can be given a tight fit.
All the designs described are non-locating bearings, since one of the bearing rings in each case is without ribs.

Double row cylindrical roller bearings with cylindrical bore

Design 1

- Outer ring with three rigid ribs, inner ring without ribs, lubrication groove and lubrication holes in the outer ring, brass double comb cage
- Bearings of dimension series 49 with standardised main dimensions and designations, in some cases in tolerance class P5, for high speed work rolls in rolling mills
- Non-standardised bearings (Z-5..ZL) with normal accuracy
- Application:
  – for example in rolling mills and plastics calenders.

Design 2

- Outer ring with three rigid ribs, inner ring without ribs, no lubrication groove and lubrication holes in the outer ring, brass double comb cage
- Bearings of series NNU41 or special bearings (Z-5..ZL)
- Application:
  – for example in grinding track mills.



Double row cylindrical roller bearings with cage

Design 3

- Special bearings (Z-5..ZL):
  - outer ring with two rigid ribs, inner ring without ribs, lubrication groove and lubrication holes in the outer ring
  - brass or steel window cage.

Design 4

- Special bearings (Z-5..ZL):
  - outer ring with two rigid ribs, inner ring without ribs, lubrication grooves on the end faces of the outer ring
  - brass or steel window cage.

Bearings with cylindrical bore of Design 1 to 4, *Figure 1*.

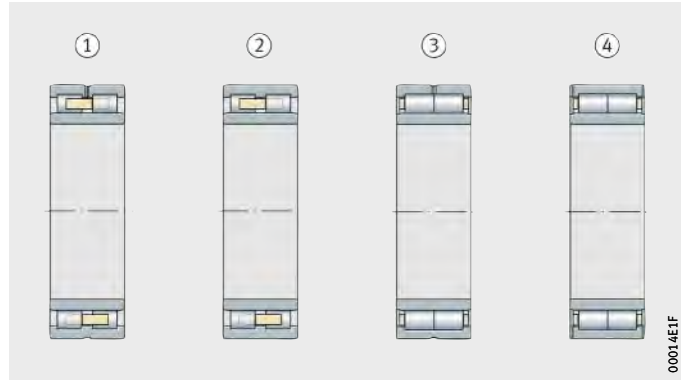

① Design 1
② Design 2
③ Design 3
④ Design 4

Figure 1
Double row cylindrical roller bearings with cylindrical bore

Design 5

- Special bearings:
  - outer ring with two rigid ribs, inner ring without ribs, lubrication groove and lubrication holes in the outer ring
  - steel pin cage and through-drilled rollers
- Application:
  - for example in rolling mills and plastics calenders.

Design 6

- Special bearings:
  - outer ring with two rigid ribs, inner ring without ribs, lubrication grooves on the end faces of the outer ring
  - steel pin cage and through-drilled rollers
- Application:
  - for example in rolling mills and plastics calenders.

Design 7

- Special bearings:
  - outer ring with three rigid ribs, inner ring without ribs, lubrication groove and lubrication holes in the outer ring
  - steel pin cage
- Application:
  - for example in rolling mills and plastics calenders.

Bearings with cylindrical bore of Design 5 to 7, *Figure 2*.

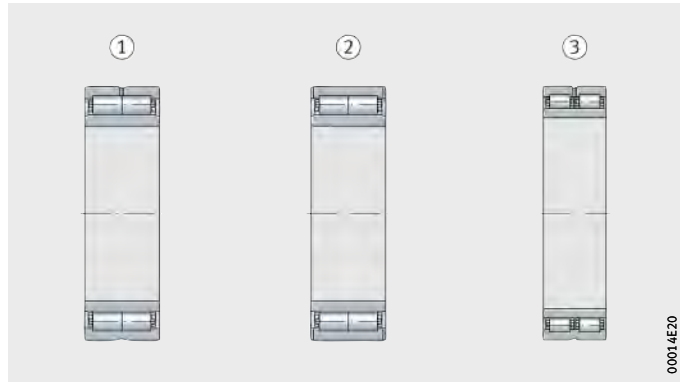

① Design 5
② Design 6
③ Design 7

Figure 2
Double row cylindrical roller bearings with cylindrical bore (continued)

Double row cylindrical roller bearings with cage

Double row cylindrical roller bearings with tapered bore

Double row cylindrical roller bearings with tapered bore (taper 1:12) are super precision bearings for machine tools. The radial internal clearance can be set to an optimum value during mounting.
The bearings are suitable for particularly high speeds.
They have a lubrication groove and lubrication holes in the outer ring.

Design 8

- Bearings of series NN30..-AS-K-M-SP have a ribless outer ring and an inner ring with three rigid ribs.
- Each row of rollers has a separate solid brass cage.

Design 9

- In bearings of series NNU49..-S-K-M-SP, the outer ring has three rigid ribs, while the inner ring is without ribs.
- The bearings have a brass double comb cage.

Bearings with tapered bore of Design 8 and 9, *Figure 3*.

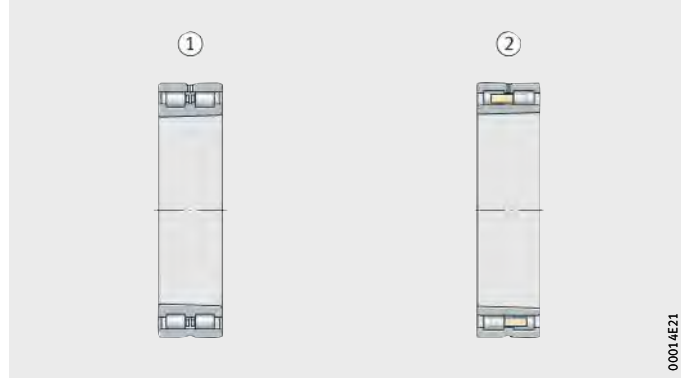

① Series NN30..-AS-K-M-SP (Design 8)
② Series NNU49..-S-K-M-SP (Design 9)

Figure 3
Double row cylindrical roller bearings with tapered bore

Non-locating bearings

All the double row cylindrical roller bearings described here are non-locating bearings and can support radial forces only.
Axial forces are supported by additional axial bearings, for example in the case of super precision bearings by double direction axial angular contact ball bearings.

Axial displacement

The outer and inner ring can be axially displaced relative to each other from the central position by the values “s” stated in the dimension tables.

Sealing

The bearings are supplied without seals.

Lubrication

The bearings can be lubricated from the end faces using grease or oil. Some designs have a lubrication groove and lubrication holes in the outer ring. In the case of standardised bearings, this is indicated by the suffix S. Some special bearings have lubrication grooves in the outer ring end faces.

Operating temperature

The double row cylindrical roller bearings can be used at operating temperatures from –30 °C to +150 °C.

For continuous operation above +120 °C, please contact us.

Cages

Many double row cylindrical roller bearings have roller-guided solid cages made from brass, while some special bearings have cages made from steel.

Special bearings of Designs 5 to 7 have solid pin cages made from steel and through-drilled rollers. These bearings are designed for extremely high load carrying capacity and strong acceleration or deceleration, which occur for example in reversing roll stands.

Suffixes

Suffixes for available designs: see table.

Available designs

Suffix	Description	Design
A	Modified internal construction	Standard
C2	Radial internal clearance smaller than normal	Special design, available by agreement only
C3	Radial internal clearance larger than normal	
K	Tapered bore, taper 1:12	Standard
M	Solid brass cage, guided by rollers	
P5	Tolerance class P5	Special design, available by agreement only
S	Lubrication groove and lubrication holes in outer ring	Standard
SP	Tolerance class SP	



Double row cylindrical roller bearings with cage

Design and safety guidelines

Permissible skewing

The permissible misalignment of the inner ring relative to the outer ring in double row cylindrical roller bearings is very limited.

Minimum radial load

In continuous operation, a minimum radial load of the order of $F_{r\,min} = C_{0r}/60$ is necessary.

If $F_{r\,min} < C_{0r}/60$, please contact us.

Equivalent dynamic bearing load

For bearings under dynamic loading used as non-locating bearings, the following applies:

$$P = F_r$$

P kN
Equivalent dynamic bearing load
F_r kN
Radial dynamic bearing load.

Operating life of super precision bearings

Super precision bearings must guide machine parts with very high precision and support forces at up to very high speeds.

They are selected predominantly from the perspectives of:

- accuracy
- rigidity
- running behaviour.

In order that they can fulfil these tasks for as long as possible, the bearings must run without wear. The precondition for this is the creation of a load-bearing hydrodynamic lubricant film at the contact points of the rolling contact partners.
Under these conditions, rolling bearings will achieve their fatigue life in a large number of applications. If the design is appropriate to the fatigue life, the operating life of the bearing is normally restricted by the lubricant operating life.

The decisive factors for the operating life from the perspective of load are the Hertzian pressures occurring at the contacts and the bearing kinematics. For high performance assemblies, individual design with the aid of special calculation programs is therefore advisable.

Since failure as a result of fatigue plays no part in practice in the case of high precision bearings, calculation of the rating life L_{10} in accordance with DIN ISO 281 is not suitable as a means of determining the operating life.

Equivalent static bearing load

For bearings under static loading, the following applies:

$$P_0 = F_{0r}$$

P_0 kN
Equivalent static bearing load
F_{0r} kN
Radial static bearing load.

Static load safety factor of super precision bearings

$$S_0 = \frac{C_{0r}}{P_0}$$

S_0 –
Static load safety factor
C_{0r} kN
Basic static load rating, see dimension tables
P_0 kN
Equivalent static bearing load.

In order to achieve sufficiently smooth running, the static load safety factor for super precision bearings should be $S_0 > 3$.

Speeds of super precision bearings

The achievable speed depends on the radial internal clearance while warm from operation.

For calculation, the values from the dimension table are multiplied by the correction factor, see table.

Correction factors

Clearance or preload in operation µm		Correction factor
0 to 5	(clearance)	1 to 1,1
–5 to 0	(preload)	0,8 to 1

The limiting speeds n_G in the dimension tables for super precision bearings are valid for lubrication with grease or for minimal quantity lubrication with oil and must not be exceeded.

Design of bearing arrangements

Shaft and housing tolerances

Recommended shaft tolerances for radial bearings with cylindrical bore, see table, page 130.

Recommended housing tolerances for radial bearings, see table, page 131.

Mounting dimensions

The dimension tables give the maximum dimensions of the radii r_a and r_{a1} and the diameters of the abutment shoulders.

Tapered shafts for super precision bearings

Recommendations for machining of the tapered shaft: see table and *Figure 4*.

Tapered shaft

Shaft diameter				Roundness	Flatness	Axial runout	Mean roughness
d mm		Deviation of small taper diameter µm		t_2 µm	t_3 µm	t_4 µm	R_a µm
over	incl.	max.	min.				
200	225	+405	+385	3	3	4,5	0,2
225	250	+445	+425	3	3	4,5	0,2
250	280	+498	+475	4	4	6	0,4
280	315	+548	+525	4	4	6	0,4
315	355	+615	+590	5	5	7	0,4
355	400	+685	+660	5	5	7	0,4
400	450	+767	+740	6	6	8	0,4
450	500	+847	+820	6	6	8	0,4

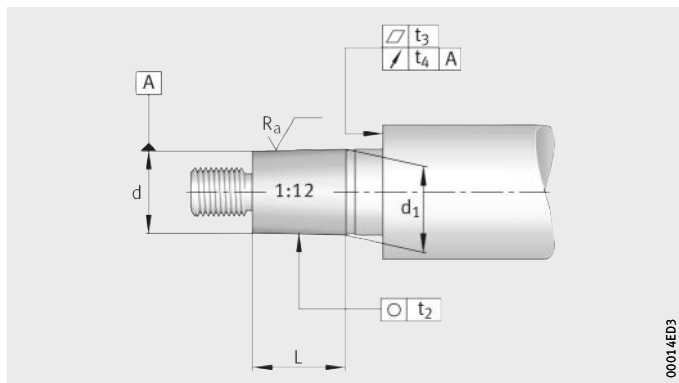

Figure 4
Design of shaft

Deviation of taper angle

The deviation of the taper angle of the shaft seat for bearings of tolerance class SP is shown in the table:

Taper length L mm		Taper angle tolerance AT_D µm			
L_U	L_O	AT_{DU}		AT_{DO}	
over	incl.	max.	min.	max.	min.
40	63	+3,2	0	+5	0
63	100	+4	0	+6,3	0
100	160	+5	0	+8	0
160	250	+3,2	0	+10	0

The taper angle tolerance AT_D applies vertical to the axis and is defined as the differential diameter. If FAG taper gauges MGK132 are used, the values for the tolerance AT_D should be halved (inclination angle tolerance). For taper lengths with nominal dimensions between the values listed in the table, the taper angle tolerance AT_D should be determined by interpolation.

Calculation example

Taper length of shaft seat 50 mm, tolerance class SP.

$$AT_D = AT_{DU} + \frac{AT_{DO} - AT_{DU}}{L_o - L_u} \cdot (L - L_u)$$

$$AT_D = 3{,}2 + \frac{5 - 3{,}2}{63 - 40} \cdot (50 - 40) = 3{,}98\,\mu m$$

Taper angle tolerance AT_D = +4 µm.

Housings for super precision bearings

In order to allow mounting and dismounting of the bearings, the dimension $D_{b\ min}$ in the dimension tables must be observed.

Recommendations for machining of the housings: see table and *Figure 5*.

Housing bores for super precision bearings

Housing bore				Cylindricity	Flatness	Axial runout	Coaxiality	Mean roughness
D mm		Deviation µm		t_1 µm	t_3 µm	t_4 µm	t_5 µm	R_a µm
over	incl.	max.	min.					
250	315	+3	−20	6	6	8	12	1,6
315	400	+3	−22	7	7	9	13	1,6
400	500	+2	−25	8	8	10	15	1,6
500	630	0	−29	9	9	11	16	1,6
630	800	0	−32	10	10	12	18	1,6

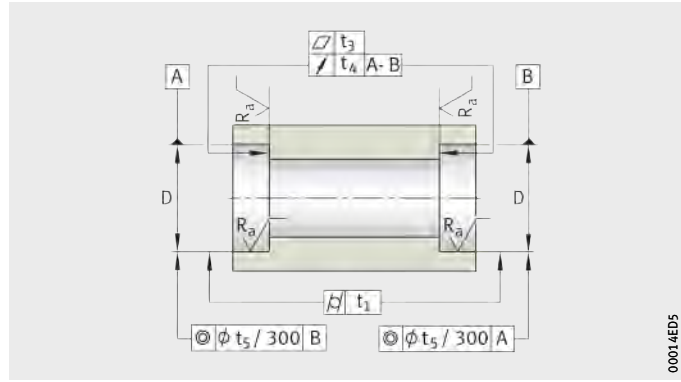

Figure 5
Design of housing

Accuracy

The dimensional and running tolerances of the bearings with cylindrical bore correspond to tolerance class PN and in some cases also to P5 to DIN 620.

Super precision bearings correspond to the more stringent tolerance class SP. Bearings of tolerance class UP are available by agreement.

Width tolerances SP

Bore d mm		Width deviation (in relation to bore) Δ_{Bs} µm		Width variation V_{Bs} µm
over	incl.	max.	min.	
180	250	0	−300	6
250	315	0	−350	8
315	400	0	−400	10
400	500	0	−450	12

Inner ring tolerances SP

Bore d mm		Bore deviation Δ_{dmp} µm		$\Delta_{d1\,mp} - \Delta_{dmp}$ µm		Variation V_{dp} µm	Radial runout K_{ia} µm	Axial runout S_d µm	 S_{ia} µm
over	incl.								
180	250	30	0	9	0	8	8	7	8
250	315	35	0	11	0	9	8	8	10
315	400	40	0	12	0	12	10	10	12
400	500	45	0	14	0	14	10	12	15

Outer ring tolerances SP

Outside diameter D mm		Outside diameter deviation Δ_{Ds} µm		Variation V_{Dp} µm	Radial runout K_{ea} µm	Axial runout S_D µm	 S_{ea} µm
over	incl.						
250	315	0	−18	9	11	8	10
315	400	0	−20	10	13	10	13
400	500	0	−23	12	15	11	15
500	630	0	−28	14	17	13	18
630	800	0	−35	18	20	15	22



Radial internal clearance

The radial internal clearance of bearings with a cylindrical bore normally corresponds to internal clearance group CN to DIN 620-4.

Radial internal clearance (cylindrical bore)

Bore d mm		Radial internal clearance					
		CN µm		C3 µm		C4 µm	
over	incl.	min.	max.	min.	max.	min.	max.
180	200	90	145	140	195	195	250
200	225	105	165	160	220	220	280
225	250	110	175	170	235	235	300
250	280	125	195	190	260	260	330
280	315	130	205	200	275	275	350
315	355	145	225	225	305	305	385
355	400	190	280	280	370	370	460
400	450	210	310	310	410	410	510
450	500	220	330	330	440	440	550
500	560	240	360	360	480	480	600
560	630	260	380	380	500	500	620
630	710	285	425	425	565	565	705
710	800	310	470	470	630	630	790
800	900	350	520	520	690	690	860
900	1000	390	580	580	770	770	960
1000	1120	430	640	640	850	850	1060
1120	1250	470	710	710	950	950	1190
1250	1400	530	790	790	1050	1050	1310
1400	1600	610	890	890	1170	1170	1450

Radial internal clearance of super precision bearings

The radial internal clearance of super precision bearings is smaller than the normal internal clearance and corresponds to internal clearance group C1NA for the accuracy SP and UP.
The internal clearance is not stated in the designation.
The bearing rings are not interchangeable.

Radial internal clearance C1NA (tapered bore)

Bore d mm		Radial internal clearance C1NA µm	
over	incl.	min.	max.
200	225	60	95
225	250	65	100
250	280	75	110
280	315	80	120
315	355	90	135
355	400	100	150
400	450	110	170
450	500	120	190
500	560	130	210
560	630	140	230
630	710	160	260
710	800	170	290
800	900	190	330
900	1000	210	360
1000	1120	230	400
1120	1250	250	440
1250	1400	270	460
1400	1600	300	500
1600	1800	320	530



Cylindrical roller bearings with cage

Double row,
with cylindrical bore

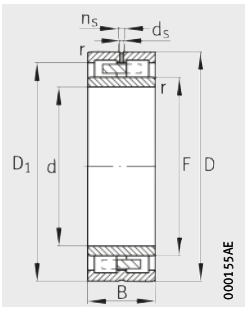

Design 1

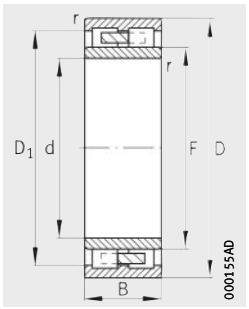

Design 2

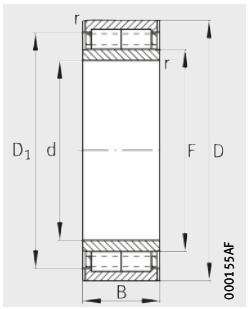

Design 4

Dimension table · Dimensions in mm

Designation	Design	Mass	Dimensions						
		m	d	D	B	r	$s^{1)}$	F	D_1
		≈kg				min.			≈
NNU4138-M	2	42,3	**190**	320	128	3	4	222	275,3
NNU4140-M	2	52,2	**200**	340	140	3	4,3	235	295
NNU4144-M	2	65,9	**220**	370	150	4	4,9	258	321,5
NNU4948-S-M-P5-C3	1	18,2	**240**	320	80	2,1	4,7	265	292,2
NNU4148-M	2	80,9	**240**	400	160	4	5,1	282	352,1
NNU4852-S-M	1	10,6	**260**	320	60	2	2,5	279,5	299
NNU4952-S-M-P5-C3	1	31,9	**260**	360	100	2,1	4	292	325,6
NNU4052-S-M	1	65,5	**260**	400	140	4	4,5	298	354,9
NNU4152-M	2	115	**260**	440	180	4	7,7	306	381,2
NNU4856-S-M	1	15,4	**280**	350	69	2	2,5	302	326,6
NNU4956-S-M-P5-C3	1	33,7	**280**	380	100	2,1	4	312	345,6
NNU4156-M	2	121	**280**	460	180	5	5	326	401,2
NNU4860-S-M	1	22	**300**	380	80	2,1	3,4	325	353,2
NNU4960-S-M-P5-C3	1	52,3	**300**	420	118	3	5	339	379
NNU4160-M	2	161	**300**	500	200	5	9,2	351	434,6
NNU4864-S-M	1	23,2	**320**	400	80	2,1	3,4	346	373,2
NNU4964-S-M-P5-C3	1	55,2	**320**	440	118	3	8,1	359	399
Z-525271.ZL	4	68,6	**320**	460	120	4	7	364	413,9
NNU4164-M	2	208	**320**	540	218	5	9,5	375	465,1
NNU4868-S-M	1	25	**340**	420	80	2,1	5,5	366	393,2
NNU4968-S-M-P5-C3	1	58	**340**	460	118	3	6,4	379	419
NNU4068-S-M	1	140	**340**	520	180	5	8,4	385	460
NNU4168-M	2	268	**340**	580	243	5	10,3	402	502,5
NNU4872-S-M	1	25,8	**360**	440	80	2,1	3,4	386	414,1
Z-527930.ZL	6	41,9	**360**	460	100	3	8,8	384,7	426,6
NNU4972-S-M-C3	1	60,8	**360**	480	118	3	5	399	439
Z-529482.ZL	6	78,7	**360**	500	125	5	–	394	454
NNU4172-M	2	281	**360**	600	243	5	10,2	422	523
NNU4876-S-M	1	44	**380**	480	100	2,1	6,8	412	445,6
NNU4976-S-M-C3	1	91,5	**380**	520	140	4	7,5	426	470
Z-556618.ZL	5	114	**380**	540	150	3	8,7	422	485,4
Z-507768.ZL	4	135	**380**	540	180	4	8	420	490,4
NNU4176-M	2	293	**380**	620	243	5	10,3	442	542,5

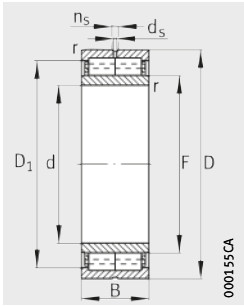

Design 5
With pin cage

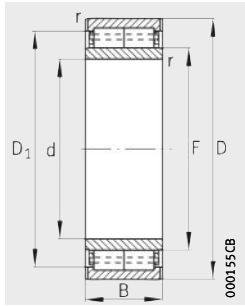

Design 6
With pin cage

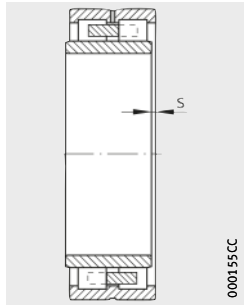

[1] Axial displacement “s”

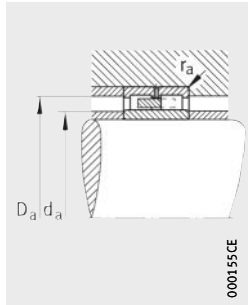

Mounting dimensions

		Mounting dimensions			Basic load ratings		Fatigue limit load	Limiting speed
d_s	n_s	d_a	D_a	r_a	dyn. C_r	stat. C_{0r}	C_{ur}	n_G
		min.	max.	max.	kN	kN	kN	min^{-1}
–	–	204	306	2,5	1 200	2 120	237	2 400
–	–	214	326	2,5	1 430	2 500	275	2 200
–	–	237	353	3	1 630	2 900	315	1 900
6,3	12,2	250	310	2	530	1 200	127	2 000
–	–	257	383	3	1 960	3 600	380	1 800
4,8	9,5	269	311	2	375	1 020	107	1 900
8	15	270	350	2	750	1 700	173	1 800
6,3	12,2	275	385	3	1 660	3 450	365	1 700
–	–	277	423	3	2 360	4 400	450	1 700
4,8	9,5	289	341	2	520	1 370	138	1 800
8	15	290	370	2	765	1 800	181	1 700
–	–	300	440	4	2 400	4 650	470	1 600
4,8	9,5	310	370	2	630	1 630	162	1 700
9,5	17,7	312	408	2,5	1 040	2 400	243	1 600
–	–	320	480	4	2 900	5 700	570	1 500
4,8	9,5	330	390	2	640	1 700	166	1 600
9,5	17,7	332	428	2,5	1 060	2 550	255	1 600
–	–	–	–	3	1 530	3 550	350	1 500
–	–	340	520	4	3 350	6 550	640	1 400
4,8	9,5	350	410	2	655	1 800	173	1 600
9,5	17,7	352	448	2,5	1 100	2 650	265	1 500
8	19	357	503	4	2 600	5 400	520	1 400
–	–	360	560	4	4 000	7 800	740	1 300
–	–	370	430	2	670	1 900	180	1 500
–	–	–	–	2,5	1 290	3 350	330	1 500
9,5	17,7	372	468	2,5	1 140	2 800	275	1 400
–	–	–	–	4	2 040	4 650	440	1 400
–	–	380	580	4	4 050	8 150	780	1 200
6,3	12,2	390	470	2,1	965	2 600	244	1 400
9,5	17,7	395	–	3	1 430	3 600	340	1 300
–	–	–	–	2,5	2 550	6 000	580	1 300
–	–	–	–	3	2 800	6 400	620	1 300
–	–	400	600	4	4 250	8 650	810	1 200

Cylindrical roller bearings with cage

Double row,
with cylindrical bore

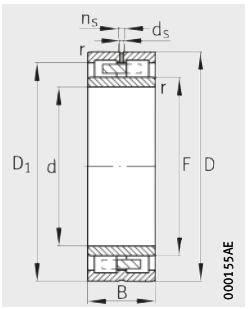

Design 1

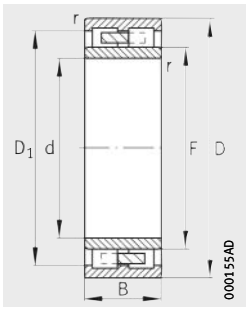

Design 2

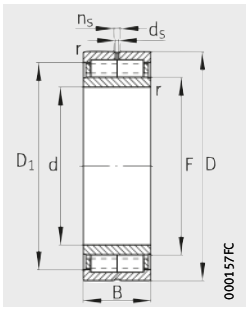

Design 3

Dimension table (continued) · Dimensions in mm

Designation	Design	Mass	Dimensions						
		m	d	D	B	r	s[1)]	F	D_1
		≈kg				min.			≈
NNU4980-S-M-C3	1	95,2	**400**	540	140	4	5,5	446	490,8
NNU4080-S-M	1	199	**400**	600	200	5	9,5	450	534
Z-526089.ZL	7	343	**400**	640	260	5	–	461	568
NNU4180-M	2	324	**400**	650	250	6	11,4	463	577
NNU4884-S-M	1	48,4	**420**	520	100	2,1	6,2	453	486,6
NNU4984-S-M-C3	1	99,2	**420**	560	140	4	8,3	466	510,8
Z-539553.ZL	6	108	**420**	580	130	4	7	460	526,8
Z-533053.ZL	1	128	**420**	580	160	4	5,9	463	530
NNU4184-M	2	434	**420**	700	280	6	8,7	491	612
NNU4888-S-M	1	50,2	**440**	540	100	2,1	3,8	473	506,6
Z-528620.ZL	6	81,4	**440**	570	120	3	9	473	526,4
NNU4988-S-M-C3	1	137	**440**	600	160	4	5,8	490	544,4
NNU4088-S-M	1	243	**440**	650	212	6	8	491	581
NNU4188-M	2	453	**440**	720	280	6	12,9	511	632
Z-524628.ZL	6	58,3	**460**	570	105	3	6,3	486,7	533,6
NNU4892-S-M	1	75,1	**460**	580	118	3	4,9	499	539
NNU4992-S-M-C3	1	141	**460**	620	160	4	5,8	510	564,4
NNU4092-S-M	1	275	**460**	680	218	6	9,5	516	606
NNU4192-M	2	550	**460**	760	300	7,5	8,7	537	663
NNU4896-S-M	1	77,7	**480**	600	118	3	4,9	519	559
NNU4996-S-M-C3	1	154	**480**	650	170	5	6	534	593
NNU4096-S-M	1	282	**480**	700	218	6	9,5	538	631,5
NNU4196-M	2	602	**480**	790	308	7,5	13	557	691,5
NNU48/500-S-M	1	75,7	**500**	620	118	3	4,7	539	580,5
Z-523745.ZL	6	81,7	**500**	620	120	4	10	532	582
NNU49/500-S-M-C3	1	159	**500**	670	170	5	6	554	613
NNU40/500-S-M	1	295	**500**	720	218	6	9,5	558	651,5
Z-509393.ZL	3	312	**500**	720	218	6	9,5	558	647,6
NNU41/500-M	2	706	**500**	830	325	7,5	11,7	582	725
NNU49/530-S-M-C3	1	206	**530**	710	180	5	7,2	588	655
NNU40/530-S-M	1	407	**530**	780	250	6	11,8	591	698
NNU41/530-M	2	796	**530**	870	335	7,5	16,2	618	761
Z-549875.ZL	1	452	**550**	800	260	6	–	612	721
Z-522739.ZL	6	91	**560**	680	120	5	8,5	592	642
NNU49/560-S-M-C3	1	246	**560**	750	190	5	5,8	617	684
NNU40/560-S-M	1	461	**560**	820	258	6	13,8	630	737
NNU41/560-M	2	952	**560**	920	355	7,5	15,8	653	804

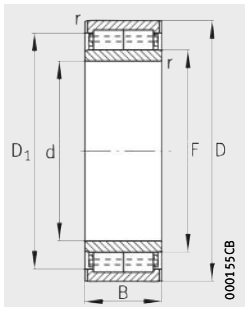

Design 6
With pin cage

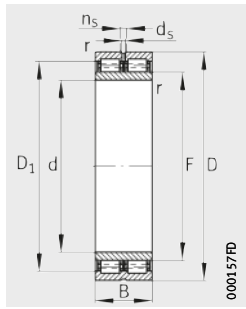

Design 7
With pin cage

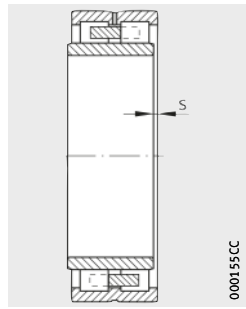

[1] Axial displacement “s”

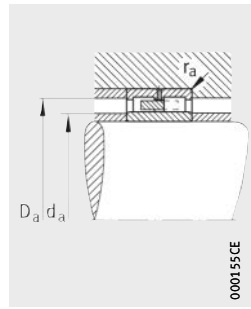

Mounting dimensions

		Mounting dimensions			Basic load ratings		Fatigue limit load	Limiting speed
d_s	n_s	d_a	D_a	r_a	dyn. C_r	stat. C_{0r}	C_{ur}	n_G
		min.	max.	max.	kN	kN	kN	min^{-1}
9,5	17,7	415	525	3	1 500	3 800	355	1 300
9,5	17,7	417	583	4	3 200	6 950	650	1 200
9,5	17,7	–	–	4	5 300	11 200	1 040	1 100
–	–	426	624	5	4 800	9 500	860	1 100
8	15	430	510	2	1 000	2 850	260	1 300
9,5	17,7	435	545	3	1 530	4 000	370	1 200
–	–	–	–	3	2 400	5 600	520	1 200
6,3	12,2	–	–	3	2 280	5 200	485	1 100
–	–	446	674	5	5 500	11 000	970	1 000
8	15	450	530	2	1 040	3 000	270	1 200
–	–	–	–	2,5	1 960	5 100	470	1 100
9,5	17,7	455	585	3	2 040	5 200	480	1 100
9,5	21,7	463	627	5	3 800	8 300	770	1 000
–	–	466	694	5	5 600	11 600	1 010	950
–	–	–	–	2,5	1 630	4 400	400	1 100
8	15	472	568	2,5	1 320	3 650	340	1 100
9,5	17,7	475	605	3	2 120	5 500	500	1 000
9,5	21,7	–	–	5	3 900	8 800	790	950
–	–	492	728	6	6 400	13 200	1 160	900
8	15	492	588	2,5	1 340	3 800	345	1 000
9,5	17,7	497	633	4	2 360	6 100	550	950
9,5	21,7	503	677	5	4 150	9 300	840	950
–	–	512	758	6	6 550	13 400	1 140	850
8	15	512	608	2,5	1 400	4 150	370	1 000
–	–	–	–	3	1 960	5 600	495	1 000
9,5	17,7	517	653	4	2 320	6 100	540	950
9,5	21,7	523	697	5	4 250	9 650	860	900
8	15	–	–	5	4 650	11 000	980	900
–	–	532	798	6	7 200	14 600	1 250	850
9,5	17,7	547	693	4	2 900	7 650	670	900
9,5	21,7	553	757	5	5 100	11 600	1 000	850
–	–	562	838	6	7 650	16 300	1 370	800
12,5	23,5	–	–	5	6 100	14 600	1 220	800
–	–	–	–	4	2 080	6 300	540	900
9,5	17,7	577	733	4	3 150	8 800	760	850
9,5	21,7	583	797	5	5 200	12 000	1 030	800
–	–	592	888	6	8 800	19 000	1 550	750

Cylindrical roller bearings with cage

Double row,
with cylindrical bore

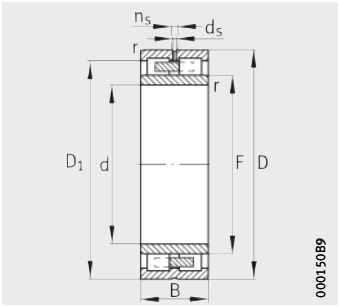

Design 1

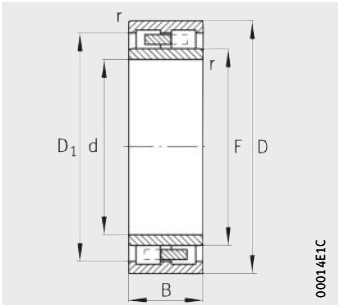

Design 2

Dimension table (continued) · Dimensions in mm

Designation	Design	Mass	Dimensions						
		m	d	D	B	r	$s^{1)}$	F	D_1
		≈kg				min.			≈
NNU49/600-S-M-C3	1	287	**600**	800	200	5	6,3	666	741
NNU40/600-S-M	1	533	**600**	870	272	6	12	668	787,5
NNU41/600-M	2	1 120	**600**	980	375	7,5	18	699	858,5
NNU48/630-S-M	1	164	**630**	780	150	4	8,8	678	726
NNU49/630-S-M-C3	1	362	**630**	850	218	6	8,6	704	784,5
NNU41/630-M	2	1 320	**630**	1 030	400	7,5	11,7	734	902
Z-509944.ZL	2	388	**660**	880	225	6	10	727	807,3
NNU49/670-S-M-C3	1	421	**670**	900	230	6	7	738	828,5
NNU41/670-M	2	1 530	**670**	1 090	412	7,5	18,2	774	950,5
NNU49/710-S-M-C3	1	488	**710**	950	243	6	7,9	782	875,5
NNU41/710-M	2	1 790	**710**	1 150	438	9,5	20	820	1 005
NNU49/750-S-M-C3	1	563	**750**	1 000	250	6	7,5	825	918,8
NNU41/750-M	2	2 190	**750**	1 220	475	9,5	21,3	871	1 073
NNU48/800-S-M	1	279	**800**	980	180	5	5,9	856	919,5
NNU49/800-S-M-C3	1	635	**800**	1 060	258	6	10,2	880	980,8
NNU41/800-M	2	2 390	**800**	1 280	475	9,5	12,5	921	1 123
NNU48/850-S-M	1	292	**850**	1 030	180	5	5,9	910	971
NNU49/850-S-M-C3	1	722	**850**	1 120	272	6	9,5	931	1 031,8
NNU41/850-M	2	2 810	**850**	1 360	500	12	12,9	976	1 194
NNU49/900-S-M-C3	1	824	**900**	1 180	280	6	11,8	986	1 093
NNU41/900-M	2	3 100	**900**	1 420	515	12	23	1 032	1 250
NNU48/950-S-M	1	430	**950**	1 150	200	5	6,3	1 016	1 086
NNU49/950-S-M-C3	1	938	**950**	1 250	300	7,5	9,3	1 046	1 160
NNU41/950-M	2	3 660	**950**	1 500	545	12	14	1 092	1 327
NNU49/1000-S-M-C3	1	1 200	**1 000**	1 320	315	7,5	12,8	1 103	1 224
NNU41/1000-M	2	4 340	**1 000**	1 580	580	12	14,1	1 154	1 406
NNU49/1060-S-M-C3	1	1 410	**1 060**	1 400	335	7,5	17,5	1 160	1 294
NNU41/1060-M	2	4 930	**1 060**	1 660	600	15	15	1 214	1 466
NNU49/1120-S-M-C3	1	1 460	**1 120**	1 460	335	7,5	10,5	1 220	1 354
NNU41/1120-M	2	5 750	**1 120**	1 750	630	15	15,9	1 279	1 548
NNU48/1180-S-M	1	783	**1 180**	1 420	243	6	14,8	1 264	1 341
NNU49/1180-S-M-C3	1	1 750	**1 180**	1 540	355	7,5	10	1 285	1 427,5
NNU41/1180-M	2	6 880	**1 180**	1 850	670	15	16,5	1 350	1 636
NNU49/1250-S-M-C3	1	2 070	**1 250**	1 630	375	9,5	9,5	1 360	1 511
NNU41/1250-M	2	8 000	**1 250**	1 950	710	15	17,4	1 426	1 720
NNU49/1320-S-M-C3	1	2 520	**1 320**	1 720	400	7,5	10	1 430	1 581
NNU49/1600-S-M-C3	1	3 950	**1 600**	2 060	462	9,5	12	1 740	1 908

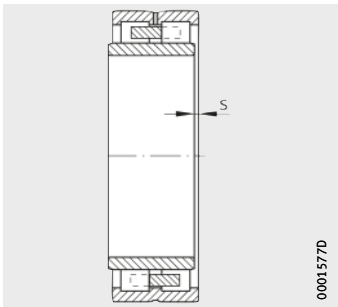

1) Axial displacement “s”

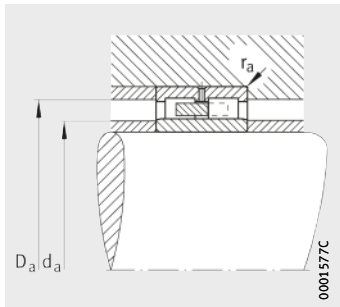

Mounting dimensions

		Mounting dimensions			Basic load ratings		Fatigue limit load	Limiting speed
d_s	n_s	d_a	D_a	r_a	dyn. C_r	stat. C_{0r}	C_{ur}	n_G
		min.	max.	max.	kN	kN	kN	min^{-1}
9,5	17,7	617	783	4	3 750	10 400	860	750
12,5	27,5	623	847	5	6 300	14 600	1 200	750
–	–	632	948	6	9 650	20 800	1 680	670
9,5	17,7	645	765	3	2 240	7 100	590	750
12,5	23,5	653	827	5	4 150	11 400	940	700
–	–	692	998	6	10 800	23 600	1 860	670
–	–	–	–	5	4 250	11 800	960	700
12,5	23,5	693	877	5	5 000	13 400	1 110	700
–	–	702	1 058	6	11 600	25 500	1 990	600
12,5	23,5	733	927	5	5 500	15 000	1 240	630
–	–	750	1 110	8	12 900	28 500	2 210	560
12,5	23,5	773	977	5	5 850	16 600	1 330	600
–	–	790	1 180	8	15 300	34 500	2 550	530
9,5	17,7	817	963	4	3 450	11 400	900	600
12,5	23,5	823	1 037	5	6 100	17 300	1 350	560
–	–	840	1 240	8	15 600	36 000	2 650	500
9,5	17,7	867	1 013	4	3 550	12 000	930	560
12,5	23,5	873	1 097	5	6 300	18 000	1 400	530
–	–	898	1 312	10	17 300	39 000	2 850	480
12,5	23,5	923	1 157	5	7 100	20 400	1 550	500
–	–	948	1 372	10	18 000	42 500	3 050	450
9,5	17,7	967	1 133	4	4 500	15 600	1 170	500
12,5	23,5	978	1 222	6	8 150	24 000	1 770	480
–	–	998	1 452	10	20 400	48 000	3 400	430
12,5	23,5	1 028	1 292	6	9 000	26 500	1 930	450
–	–	1 048	1 532	10	23 600	56 000	3 850	400
12,5	23,5	1 088	1 372	6	10 400	30 000	2 120	430
–	–	1 118	1 602	12	24 500	60 000	4 100	400
12,5	23,5	1 148	1 432	6	10 400	31 000	2 150	400
–	–	1 178	1 692	12	27 500	67 000	4 500	380
12,5	23,5	1 203	1 397	5	6 000	22 000	1 540	400
12,5	23,5	1 208	1 512	6	12 200	37 500	2 550	380
–	–	1 238	1 792	12	30 500	76 500	5 000	360
12,5	23,5	1 284	1 596	8	13 700	41 500	2 850	380
–	–	1 308	1 892	12	33 500	83 000	5 500	340
12,5	23,5	1 348	1 692	6	14 600	46 500	3 150	360
12,5	23,5	1 634	2 026	8	18 300	61 000	3 850	300

Super precision cylindrical roller bearings

Double row,
with tapered bore
(taper 1:12)

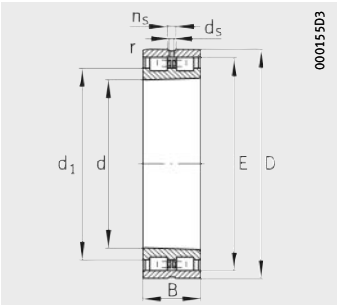

NN30..-AS-K-M-SP

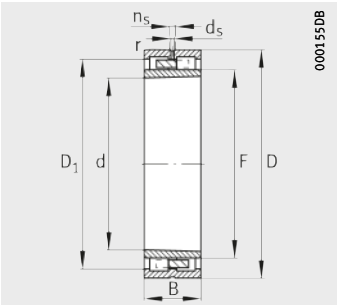

NNU49..-S-K-M-SP

Dimension table · Dimensions in mm

Designation	Mass	Dimensions								
	m	d	D	B	r	s[1]	E	F	D_1	d_1
	≈kg				min.				≈	≈
NN3044-AS-K-M-SP	29,1	**220**	340	90	3	4,5	310	–	–	265,2
NNU4948-S-K-M-SP	17,1	**240**	320	80	2,1	3,4	–	265	292,2	–
NN3048-AS-K-M-SP	31,5	**240**	360	92	3	6	330	–	–	285,2
NNU4952-S-K-M-SP	30,5	**260**	360	100	2,1	4	–	292	325,6	–
NN3052-AS-K-M-SP	46,2	**260**	400	104	4	6,5	364	–	–	312,8
NNU4956-S-K-M-SP	32,3	**280**	380	100	2,1	4	–	312	345,6	–
NN3056-AS-K-M-SP	49,7	**280**	420	106	4	6,8	384	–	–	332,8
NNU4960-S-K-M-SP	50,2	**300**	420	118	4	5	–	339	379	–
NN3060-AS-K-M-SP	68,5	**300**	460	118	4	7,5	418	–	–	360,4
NNU4964-S-K-M-SP	55,2	**320**	440	118	3	8,1	–	359	399	–
NN3064-AS-K-M-SP	73,8	**320**	480	121	4	7,9	438	–	–	380,4
NNU4968-S-K-M-SP	55,6	**340**	460	118	3	5	–	379	419	–
NN3068-AS-K-M-SP	99,3	**340**	520	133	5	8,7	473	–	–	409
NNU4972-S-K-M-SP	57,3	**360**	480	118	3	5	–	399	439	–
NN3072-AS-K-M-SP	104	**360**	540	134	5	8,7	493	–	–	429
NNU4976-S-K-M-SP	85,8	**380**	520	140	4	5,5	–	426	470	–
NN3076-AS-K-M-SP	110	**380**	560	135	5	9	513	–	–	449
NNU4980-S-K-M-SP	91	**400**	540	140	4	5,5	–	446	490,8	–
NN3080-AS-K-M-SP	143	**400**	600	148	5	9,5	549	–	–	477
NNU4984-S-K-M-SP	94,1	**420**	560	140	4	5,5	–	466	510,8	–
NN3084-AS-K-M-SP	150	**420**	620	150	5	10	569	–	–	497
NNU4988-S-K-M-SP	131	**440**	600	160	4	5,8	–	490	544,4	–
NN3088-AS-K-M-SP	172	**440**	650	157	6	10,3	597	–	–	520,2
NNU4992-S-K-M-SP	134	**460**	620	160	4	5,8	–	510	564,4	–
NN3092-AS-K-M-SP	197	**460**	680	163	6	10,5	624	–	–	544
NNU4996-S-K-M-SP	158	**480**	650	170	5	6	–	534	593	–
NN3096-AS-K-M-SP	208	**480**	700	165	6	11	644	–	–	564
NNU49/500-S-K-M-SP	162	**500**	670	170	5	6	–	554	613	–
NN30/500-AS-K-M-SP	214	**500**	720	167	6	11,5	664	–	–	584
NNU49/530-S-K-M-SP	193	**530**	710	180	5	5,8	–	588	655	–
NN30/530-AS-K-M-SP	289	**530**	780	185	6	11,3	715	–	–	617,5
NNU49/560-S-K-M-SP	235	**560**	750	190	5	5,8	–	617	684	–
NN30/560-AS-K-M-SP	331	**560**	820	195	6	11,6	756	–	–	652

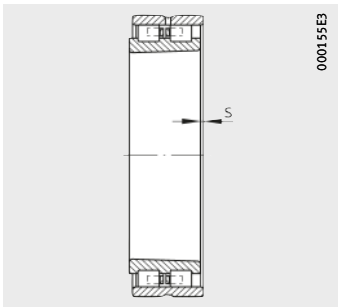

[1] Axial displacement "s" for NN30 and NNU49

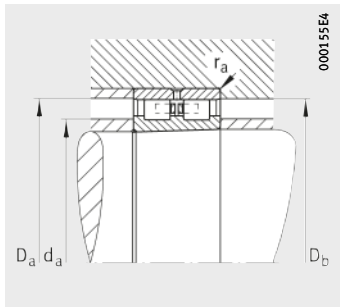

Mounting dimensions for NN30

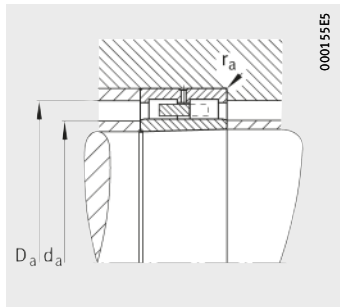

Mounting dimensions for NNU49

		Mounting dimensions				Basic load ratings		Fatigue limit load	Limiting speeds	
d_s	n_s	d_a	D_a	D_b	r_a	dyn. C_r	stat. C_{0r}	C_{ur}	n_G grease	n_G Oil
		min.	max.	min.	max.	kN	kN	kN	min^{-1}	min^{-1}
8	15	232	328	313	2,5	800	1 460	150	2 200	2 800
6,3	12,2	250	310	–	2	530	1 200	127	2 200	2 800
8	15	252	348	334	2,5	850	1 560	160	2 000	2 600
8	15	270	350	–	2	750	1 700	173	1 400	1 800
8	15	275	385	368	3	1 060	2 000	200	1 900	2 400
8	15	290	370	–	2	765	1 800	181	1 300	1 700
8	15	295	405	388	3	1 080	2 080	206	1 800	2 200
9,5	17,7	312	408	–	2,5	1 040	2 400	243	1 700	2 000
9,5	17,7	315	445	422	3	1 270	2 400	232	1 600	1 900
9,5	17,7	332	428	–	2,5	1 060	2 550	255	1 200	1 600
9,5	17,7	335	465	442	3	1 320	2 600	248	1 600	1 900
9,5	17,7	352	448	–	2,5	1 100	2 650	265	1 500	1 800
9,5	17,7	357	503	477	4	1 630	3 250	305	1 400	1 700
9,5	17,7	372	468	–	2,5	1 140	2 800	275	1 500	1 800
9,5	17,7	377	523	497	4	1 660	3 350	310	1 400	1 700
9,5	17,7	395	505	–	3	1 430	3 600	340	1 400	1 700
9,5	17,7	397	543	517	4	1 700	3 450	320	1 300	1 600
9,5	17,7	415	525	–	3	1 500	3 800	355	1 300	1 600
9,5	17,7	417	583	553	4	2 160	4 500	395	1 200	1 500
9,5	17,7	435	545	–	3	1 530	4 000	370	1 300	1 600
9,5	17,7	437	603	573	4	2 120	4 500	395	1 200	1 500
9,5	17,7	455	585	–	3	2 040	5 200	480	1 200	1 500
12,5	23,5	463	627	601	5	2 450	5 100	445	1 100	1 400
9,5	17,7	475	605	–	3	2 120	5 500	500	1 100	1 400
12,5	23,5	483	657	628	5	2 600	5 400	480	1 100	1 400
9,5	17,7	497	633	–	4	2 360	6 100	550	1 100	1 400
12,5	23,5	503	677	648	5	2 700	5 850	510	1 000	1 300
9,5	17,7	517	653	–	4	2 320	6 100	540	1 000	1 300
12,5	23,5	523	697	668	5	2 650	5 850	500	1 000	1 300
9,5	17,7	547	693	–	4	2 900	7 650	670	1 000	1 300
12,5	23,5	553	757	720	5	3 450	7 350	620	950	1 200
9,5	17,7	577	733	–	4	3 150	8 800	760	950	1 200
12,5	23,5	583	797	761	5	3 900	8 300	700	900	1 100

Super precision cylindrical roller bearings

Double row,
with tapered bore
(taper 1:12)

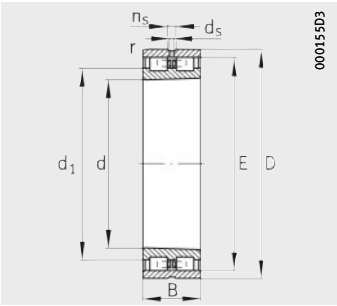

NN30..-AS-K-M-SP

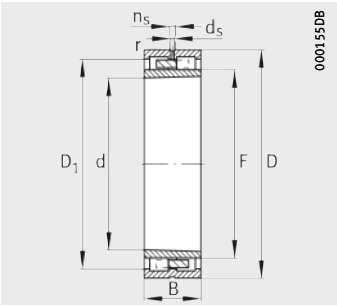

NNU49..-S-K-M-SP

Dimension table (continued) · Dimensions in mm

Designation	Mass	Dimensions								
	m	d	D	B	r	s[1)]	E	F	D_1	d_1
	≈kg				min.				≈	≈
NNU49/600-S-K-M-SP	275	**600**	800	200	5	6,3	–	666	741	–
NN30/600-AS-K-M-SP	377	**600**	870	200	6	11	803	–	–	692,5
NNU49/630-S-K-M-SP	347	**630**	850	218	6	6,9	–	704	784,5	–
NN30/630-AS-K-M-SP	454	**630**	920	212	7,5	12,5	845	–	–	734,5
NNU49/670-S-K-M-SP	399	**670**	900	230	6	7	–	738	828,5	–
NN30/670-AS-K-M-SP	600	**670**	980	230	7,5	13,5	901	–	–	779
NNU49/710-S-K-M-SP	466	**710**	950	243	6	7,9	–	782	875,5	–
NN30/710-AS-K-M-SP	671	**710**	1 030	236	7,5	13	951	–	–	820,5
NNU49/750-S-K-M-SP	538	**750**	1 000	250	6	7,5	–	825	918,8	–
NN30/750-AS-K-M-SP	739	**750**	1 090	250	7,5	11,5	1 007	–	–	859,5
NNU49/800-S-K-M-SP	608	**800**	1 060	258	6	10,2	–	880	980,8	–
NN30/800-AS-K-M-SP	836	**800**	1 150	258	7,5	12,5	1 065	–	–	917,5
NNU49/850-S-K-M-SP	689	**850**	1 120	272	6	9,5	–	931	1 031,8	–
NN30/850-AS-K-M-SP	989	**850**	1 220	272	7,5	13	1 130	–	–	974
NNU49/900-S-K-M-SP	784	**900**	1 180	280	6	9,3	–	986	1 093	–
NN30/900-AS-K-M-SP	1 100	**900**	1 280	280	7,5	14,5	1 185	–	–	1 029
NNU49/950-S-K-M-SP	962	**950**	1 250	300	7,5	9,3	–	1 046	1 160	–
NN30/950-AS-K-M-SP	1 460	**950**	1 360	300	7,5	16,8	1 255	–	–	1 091
NNU49/1000-S-K-M-SP	1 120	**1 000**	1 320	315	7,5	9,8	–	1 103	1 224	–
NN30/1000-AS-K-M-SP	1 490	**1 000**	1 420	308	7,5	16,5	1 316	–	–	1 143
NNU49/1060-S-K-M-SP	1 350	**1 060**	1 400	335	7,5	10,5	–	1 160	1 294	–
NN30/1060-AS-K-M-SP	1 740	**1 060**	1 500	325	9,5	17	1 391	–	–	1 210
NNU49/1120-S-K-M-SP	1 400	**1 120**	1 460	335	7,5	10,5	–	1 220	1 354	–
NN30/1120-AS-K-M-SP	2 030	**1 120**	1 580	345	9,5	18,5	1 467	–	–	1 278
NNU49/1180-S-K-M-SP	1 680	**1 180**	1 540	355	7,5	10	–	1 285	1 427,5	–
NN30/1180-AS-K-M-SP	2 300	**1 180**	1 660	355	9,5	13,3	1 542	–	–	1 350
NNU49/1250-S-K-M-SP	1 980	**1 250**	1 630	375	9,5	9,5	–	1 360	1 511	–
NNU49/1600-S-K-M-SP	3 770	**1 600**	2 060	462	9,5	12	–	1 740	1 908	–
NN30/1700-AS-K-M-SP	6 540	**1 700**	2 360	500	15	17	2 185	–	–	1 940

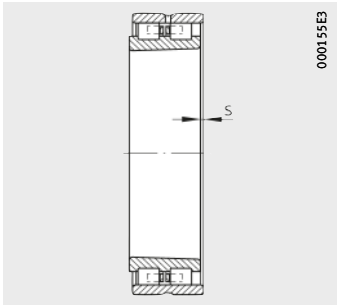

[1] Axial displacement "s" for NN30 and NNU49

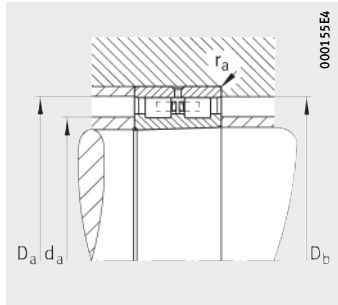

Mounting dimensions for NN30

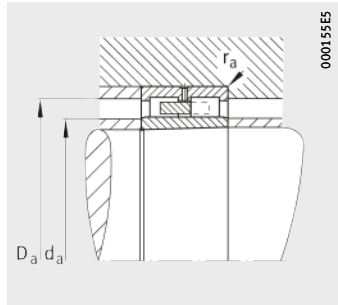

Mounting dimensions for NNU49

		Mounting dimensions				Basic load ratings		Fatigue limit load	Limiting speeds	
d_s	n_s	d_a	D_a	D_b	r_a	dyn. C_r	stat. C_{0r}	C_{ur}	n_G grease	n_G Oil
		min.	max.	min.	max.	kN	kN	kN	min^{-1}	min^{-1}
9,5	17,7	617	783	–	4	3 750	10 400	860	850	1 000
12,5	23,5	623	847	808	5	4 400	9 500	760	850	1 000
12,5	23,5	653	827	–	5	4 150	11 400	940	800	950
12,5	23,5	658	892	850	6	4 500	9 800	780	800	950
12,5	23,5	693	877	–	5	5 000	13 400	1 110	750	900
12,5	23,5	698	952	906	6	5 300	11 600	910	750	900
12,5	23,5	733	927	–	5	5 500	15 000	1 240	750	900
12,5	23,5	738	1 002	956	6	6 000	13 200	1 000	700	850
12,5	23,5	773	977	–	5	5 850	16 600	1 330	700	850
12,5	23,5	778	1 062	1 013	6	7 100	15 300	1 170	670	800
12,5	23,5	823	1 037	–	5	6 100	17 300	1 350	630	750
12,5	23,5	828	1 120	1 071	6	7 500	16 600	1 250	630	750
12,5	23,5	873	1 097	–	5	6 300	18 000	1 400	600	700
12,5	23,5	878	1 192	1 136	6	8 300	18 600	1 700	600	700
12,5	23,5	923	1 157	–	5	7 100	20 400	1 920	560	670
12,5	23,5	928	1 252	1 191	6	8 300	19 300	1 740	560	670
12,5	23,5	978	1 222	–	6	8 150	24 000	2 190	530	630
12,5	23,5	978	1 332	1 261	6	9 500	22 400	1 950	530	630
12,5	23,5	1 028	1 292	–	6	9 000	26 500	2 390	500	600
12,5	23,5	1 028	1 392	1 322	6	10 400	25 000	2 130	500	600
12,5	23,5	1 088	1 372	–	6	10 400	30 000	2 600	480	560
12,5	23,5	1 094	1 466	1 397	8	11 400	27 500	2 320	480	560
12,5	23,5	1 148	1 432	–	6	10 400	31 000	2 650	450	530
12,5	23,5	1 154	1 546	1 473	8	12 200	30 000	2 030	450	530
12,5	23,5	1 208	1 512	–	6	12 200	37 500	3 200	430	500
12,5	23,5	1 214	1 626	1 548	8	13 400	32 500	2 650	430	500
12,5	23,5	1 284	1 596	–	8	13 700	41 500	2 850	400	480
12,5	23,5	1 634	2 026	–	8	18 300	61 000	4 800	320	380
20	41	1 750	2 310	2 191	12	23 200	64 000	3 850	300	360

FAG

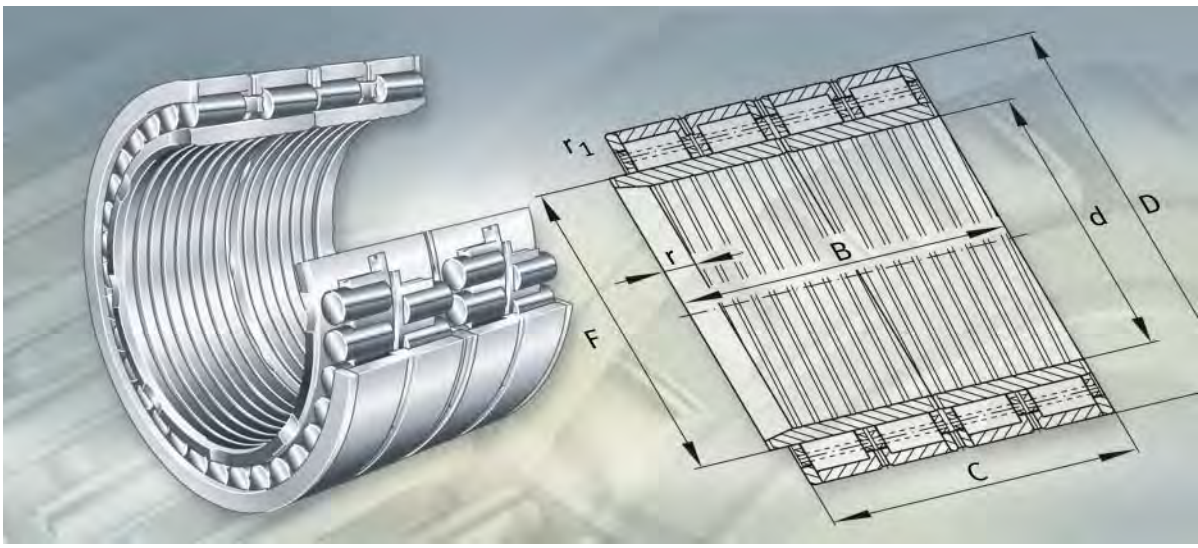

Four-row cylindrical roller bearings with cage

Four-row cylindrical roller bearings with cage

		Page
Product overview	Four-row cylindrical roller bearings with cage	416
Features	Four-row cylindrical roller bearings with cylindrical bore	417
	Four-row cylindrical roller bearings with tapered bore	421
	Non-locating bearings	422
	Sealing	422
	Lubricant	422
	Operating temperature	422
	Cages	423
	Suffixes	423
Design and safety guidelines	Minimum radial load	424
	Equivalent dynamic bearing load	424
	Equivalent static bearing load	424
	Design of bearing arrangements	424
Accuracy	Radial internal clearance of cylindrical roller bearings with cylindrical bore	425
	Radial internal clearance of cylindrical roller bearings with tapered bore	425
Dimension tables	Cylindrical roller bearings, four-row, with cylindrical bore, for tight fit on roll journals	426
	Cylindrical roller bearings, four-row, with cylindrical bore, for loose fit on roll journals	436
	Cylindrical roller bearings, four-row, with tapered bore	440



Four-row cylindrical roller bearings with cage

Non-locating bearings

With cylindrical bore for tight fit

Z-5..ZL4-01, F-8..ZL4-01

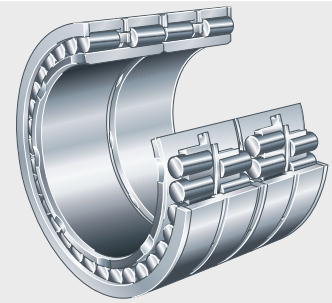

With cylindrical bore for loose fit

Z-5..ZL4-02, F-8..ZL4-02

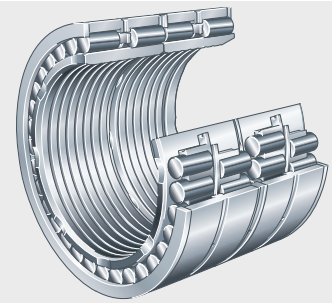

With tapered bore

Z-5..ZL4-03, F-8..ZL4-03

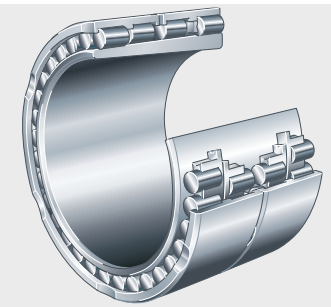

Four-row cylindrical roller bearings with cage

Features

Four-row cylindrical roller bearings comprise solid bearing rings and cylindrical roller and cage assemblies with solid cages.
The bearings are suitable for very high radial loads and high speeds and are used principally in rolling mills and roller presses.
Four-row cylindrical roller bearings are separable and are therefore easy to mount and dismount.

Four-row cylindrical roller bearings with cylindrical bore

Bearings with a cylindrical bore are available in special designs with non-standardised main dimensions and designations.
The design selected will depend on the type of application.

Bearings for tight fit on the roll journal

Four-row cylindrical roller bearings are generally designed such that they have a tight fit on the roll journal. In these bearings, the inner rings and outer rings are of the same width, *Figure 1* and *Figure 2*, page 418.

Design 1

- Two outer rings each with one rigid central rib, one intermediate ring, two loose rib washers, two ribless inner rings
- Lubrication groove and lubrication holes in the outer rings and in the intermediate ring, lubrication grooves in the end faces of the inner rings
- One steel pin cage per row of rollers.

Design 2

- Two outer rings each with one rigid central rib, one intermediate ring, two loose rib washers, two ribless inner rings
- Lubrication groove and lubrication holes in the outer rings and in the intermediate ring, lubrication grooves in the end faces of the inner rings
- Brass or steel solid cages.

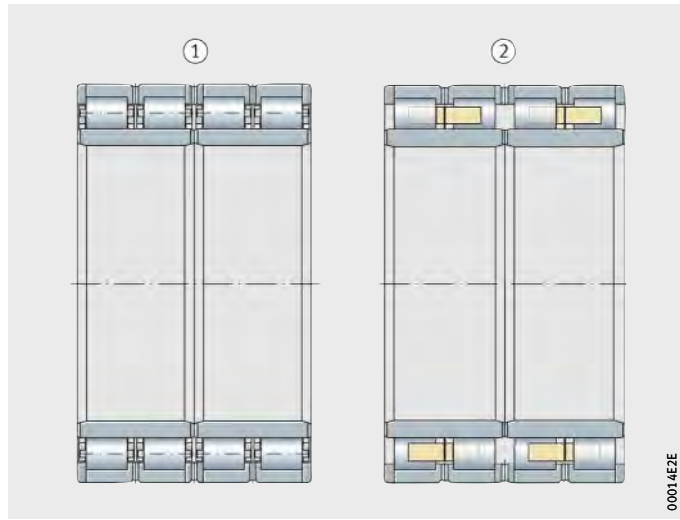

① Design 1
② Design 2

Figure 1
Four-row cylindrical roller bearings for tight fit

Four-row cylindrical roller bearings with cage

Design 3
- Two outer rings each with three rigid ribs, ribless single-piece inner ring
- Lubrication grooves in the end faces of the outer rings
- Brass or steel solid cages.

Design 4
- Two outer rings each with three rigid ribs, ribless single-piece inner ring
- Lubrication grooves in the end faces of the outer rings
- Brass or steel solid cages for each two rows of rollers.

Design 5
- Two outer rings each with three rigid ribs, two ribless inner rings
- Lubrication grooves in the end faces of the outer rings
- Brass or steel solid cages.

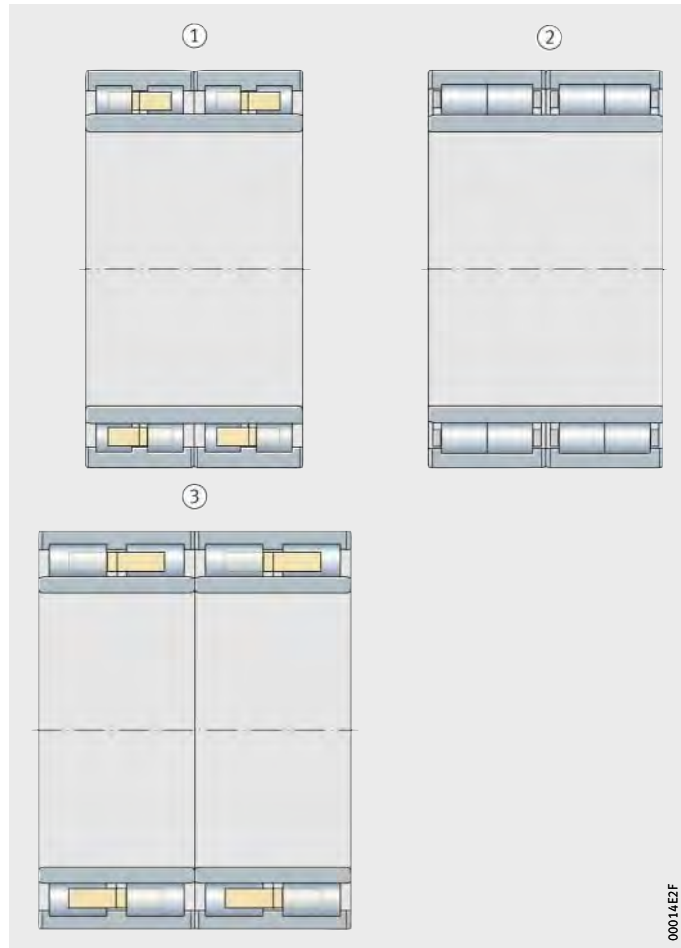

① Design 3
② Design 4
③ Design 5

Figure 2
Four-row cylindrical roller bearings for tight fit (continued)

Bearings for loose fit on the roll journal

In Designs 6 to 10 for loose fit, the inner rings are wider than the outer rings. Due to the clearance betwen the inner ring and the journal, heating and wear of the journal occurs, so it is important to achieve good lubrication of the fit joint.
The radial grooves in the lateral faces of the inner rings are intended to achieve this objective.

In Designs 6 to 8 and 10, lubrication of the journal is improved by the helical groove in the inner ring bore. The inner rings are made from case hardening steel, the radial internal clearance C2 is smaller than normal, *Figure 3* and *Figure 4*, page 420.

The bearings for a loose fit do not achieve the same high speeds as the bearings for a tight fit on the roll journal, *Figure 1*, page 417 and *Figure 2*, page 418.

Design 6

- Two outer rings each with one rigid central rib, one intermediate ring, two loose rib washers, two ribless inner rings
- Lubrication groove and lubrication holes in the outer rings and in the intermediate ring, lubrication grooves in the end faces of the inner rings
- One steel pin cage per row of rollers.

Design 7

- Two outer rings each with one rigid central rib, one intermediate ring, two loose rib washers
- Two ribless inner rings, lubrication groove and lubrication holes in the outer rings and in the intermediate ring, lubrication grooves in the end faces of the inner rings
- Brass or steel solid cages.

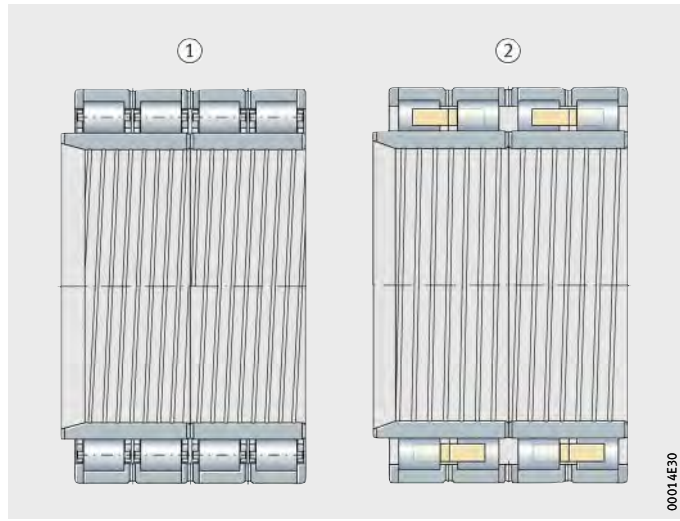

① Design 6
② Design 7

Figure 3
Four-row cylindrical roller bearings for loose fit

Four-row cylindrical roller bearings with cage

Design 8
- Two outer rings each with three rigid ribs, two ribless inner rings
- Lubrication grooves in the end faces of the inner and outer rings
- Brass or steel solid cages.

Design 9
- Two outer rings each with three rigid ribs, two ribless inner rings
- Lubrication groove and lubrication holes in the outer rings, lubrication grooves in the end faces of the inner rings
- Brass or steel solid cages.

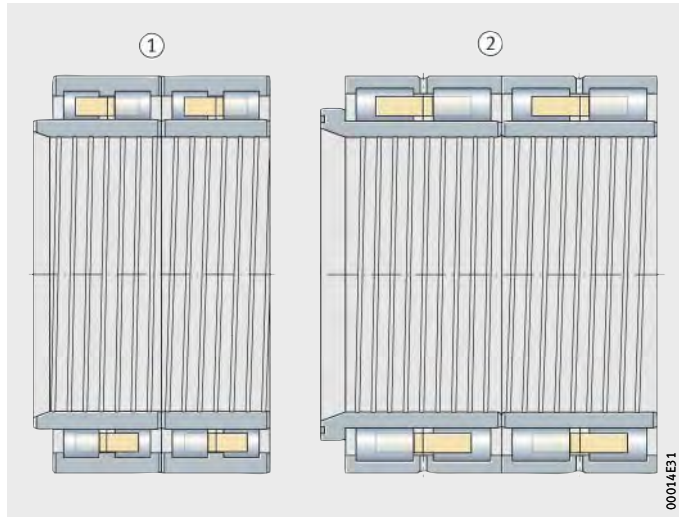

① Design 8
② Design 9

Figure 4
Four-row cylindrical roller bearings for loose fit
(continued)

Four-row cylindrical roller bearings with tapered bore

Four-row cylindrical roller bearings with tapered bore (taper 1:12) are frequently used as a replacement for oil film bearings.
In these bearings, the radial internal clearance or preload can be set to an optimum value. The ribless inner ring is of a single-piece design, *Figure 5* and *Figure 6*, page 422.

Design 10

- Two outer rings each with three rigid ribs
- Lubrication grooves in the end faces of the outer rings
- Brass or steel solid cages.

Design 11

- Two outer rings each with three rigid ribs
- Lubrication grooves in the end faces of the outer rings
- Brass or steel solid cages.

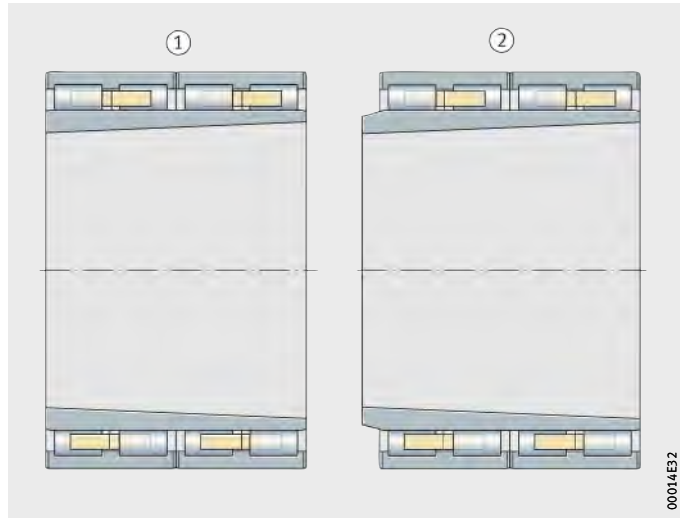

① Design 10
② Design 11

Figure 5
Four-row cylindrical roller bearings with tapered bore

Four-row cylindrical roller bearings with cage

Design 12

- Two outer rings each with one rigid central rib, one intermediate ring, two loose rib washers
- Lubrication groove and lubrication holes in the intermediate ring
- Brass or steel solid cages.

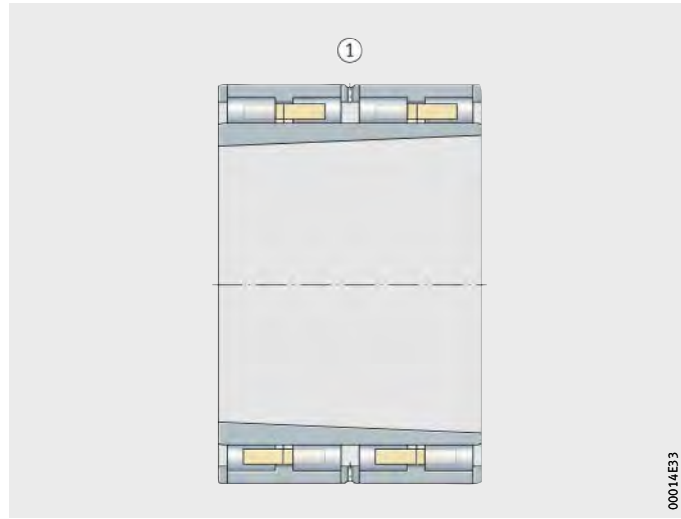

① Design 12

Figure 6
Four-row cylindrical roller bearing with tapered bore (continued)

Non-locating bearings

All the four-row cylindrical roller bearings described here are non-locating bearings and can support radial forces only. High axial forces are supported by using, for example, axial tapered roller bearings, axial spherical roller bearings or double row tapered roller bearings with a large contact angle. Angular contact ball bearings and deep groove ball bearings are used as axial bearings where small axial forces are present.

Sealing

Four-row cylindrical roller bearings are supplied without seals.

Lubricant

The lubricant should be supplied at two points. Many bearings have lubrication grooves and lubrication holes in the outer ring.
In other bearings, there are radial lubrication grooves in the end faces of the outer rings.

Operating temperature

The four-row cylindrical roller bearings can be used at operating temperatures from –30 °C to +150 °C.

For continuous operation above +120 °C, please contact us.

Cages

In four-row cylindrical roller bearings for high rolling speeds, roller-guided solid cages made from brass or steel are used. These are used, for example, for work rolls in four-high stands and in small section and wire rolling lines.

Pin cages allow the use of a large number of through-drilled rollers and thus very high load carrying capacity. Their particular strength is important in the case of bearings in large stands that are subjected to strong acceleration and deceleration, for example in reversing type operation. This design is also used for the backup rolls in four-high stands.

Suffixes

The design of the four-row cylindrical roller bearings (for example radial internal clearance, accuracy, cage) is specified in the designation (Z-5..ZL or F-8..ZL). Please contact us for relevant information.

Where there are deviations from the original design, suffixes are used, for an example see the following table:

Available designs

Suffix	Description	Design
C4	Radial internal clearance larger than C3	Special design, available by agreement only
N12BA	Two double row cylindrical roller bearings in matched sets (when ordering, state double the quantity)	

Four-row cylindrical roller bearings with cage

Design and safety guidelines

Minimum radial load

In continuous operation, a minimum radial load of the order of $F_{r\,min} = C_{0r}/60$ is necessary.

If $F_{r\,min} < C_{0r}/60$, please contact us.

Equivalent dynamic bearing load

For bearings under dynamic loading, the following applies:

$$P = F_r$$

P kN
Equivalent dynamic bearing load
F_r kN
Radial dynamic bearing load.

Equivalent static bearing load

For bearings under static loading, the following applies:

$$P_0 = F_{0r}$$

P_0 kN
Equivalent static bearing load
F_{0r} kN
Radial static bearing load.

Design of bearing arrangements

Tolerances of the roll journal

The tolerance of the roll journal depends on whether the bearing should have a tight fit or loose fit.

For four-row cylindrical roller bearings that should have a tight fit on the roll journal, we recommend the values in the following table:

Bearing bore and journal tolerance

Nominal bearing bore d mm	Journal tolerance mm
< 200	n6
200 – 400	p6/r6
> 400 – 630	+0,200 – +0,260
> 630 – 800	+0,250 – +0,330
> 800 – 1250	+0,320 – +0,420
> 1250 – 1400	+0,400 – +0,550
> 1400 – 1600	+0,520 – +0,650

Where the bearing inner ring has a loose fit, the roll journal should have a tolerance to e7.

For bearings with a tapered bore and at high speeds, please contact us to discuss tolerances.

Tolerances for the chock

We recommend the following tolerances for the bore of the chock:

- H6 for D ≦ 800 mm
- H7 for D > 800 mm.

For bearings with a tapered bore, please contact us to discuss the tolerances for the adjacent parts.

Accuracy

The dimensional and running accuracy of the four-row cylindrical roller bearings of the basic design correspond to tolerance class PN to DIN 620.

Radial internal clearance of cylindrical roller bearings with cylindrical bore

Four-row cylindrical roller bearings with a cylindrical bore have, in most cases, a radial internal clearance to C3 or C4 to DIN 620-4.

Bearings for a loose fit on the roll journal are, however, normally supplied with an internal clearance C2.

Radial internal clearance (cylindrical bore)

Bore d mm		Radial internal clearance							
		C2 µm		CN µm		C3 µm		C4 µm	
over	incl.	min.	max.	min.	max.	min.	max.	min.	max.
200	225	45	105	105	165	160	220	220	280
225	250	45	110	110	175	170	235	235	300
250	280	55	125	125	195	190	260	260	330
280	315	55	130	130	205	200	275	275	350
315	355	65	145	145	225	225	305	305	385
355	400	100	190	190	280	280	370	370	460
400	450	110	210	210	310	310	410	410	510
450	500	110	220	220	330	330	440	440	550
500	560	120	240	240	360	360	480	480	600
560	630	140	260	260	380	380	500	500	620
630	710	145	285	285	425	425	565	565	705
710	800	150	310	310	470	470	630	630	790
800	900	180	350	350	520	520	690	690	860
900	1000	200	390	390	580	580	770	770	960
1000	1120	220	430	430	640	640	850	850	1060
1120	1250	230	470	470	710	710	950	950	1190
1250	1400	270	530	530	790	790	1050	1050	1310
1400	1600	330	610	610	890	890	1170	1170	1450

Radial internal clearance of cylindrical roller bearings with tapered bore

Four-row cylindrical roller bearings with a tapered bore are normally supplied with an internal clearance C3 or C4 to DIN 620-4.

Radial internal clearance (tapered bore)

Bore d mm		Radial internal clearance					
		CN µm		C3 µm		C4 µm	
over	incl.	min.	max.	min.	max.	min.	max.
225	250	170	235	220	285	270	335
250	280	185	255	240	310	295	365
280	315	205	280	265	340	325	400
315	355	225	305	290	370	355	435
355	400	255	345	330	420	405	495
400	450	285	385	370	470	455	555
450	500	315	425	410	520	505	615

Cylindrical roller bearings

Four-row,
with cylindrical bore,
for tight fit on roll journals

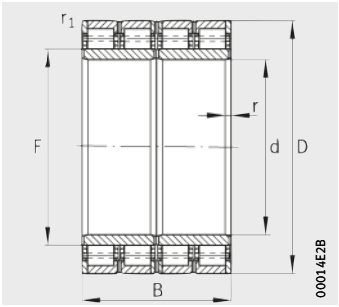

Design 1
With pin cage

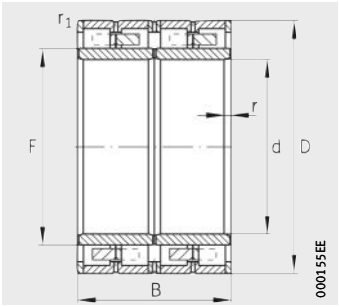

Design 2
With solid brass cage

Dimension table · Dimensions in mm

Designation	Design	Mass	Dimensions			
		m	d	D	B	F
		≈kg				
Z-509216.ZL	5	59	**220**	320	210	246
Z-541452.ZL	3	67,6	**220**	330	230	249
Z-525147.ZL	2	95,4	**220**	340	290	250
Z-508727.02.ZL	3[1]	57,8	**230**	330	206	260
Z-504547.ZL	4	46,9	**240**	330	180	265
Z-508368.ZL	3	57,4	**240**	330	220	270
Z-512972.ZL	4	59,9	**240**	340	200	266
Z-513703.ZL	3	63,4	**240**	340	220	268
Z-514959.ZL	2	101	**240**	360	290	270
Z-522310.ZL	3[3]	59,7	**250**	340	230	276
Z-533880.ZL	3	72,6	**260**	360	230	292,2
Z-507336.02.ZL	3	76,4	**260**	370	220	292
Z-507336.ZL	3	76,4	**260**	370	220	292
Z-518214.ZL	2	134	**260**	400	290	296
Z-521065.ZL	2	151	**260**	400	335	294
Z-517423.ZL	3	80,4	**265**	370	234	300
Z-536134.ZL	3	114	**275**	400	285	308
Z-507339.ZL	3[1]	81,5	**280**	390	220	312
Z-507339.02.ZL	3[1]	81,7	**280**	390	220	312
Z-513729.01.ZL	3[3]	101	**280**	390	275	312
Z-527104.ZL	2	99,9	**280**	390	275	308
Z-513342.ZL-N12BA	5[2]	57,1	**280**	400	286	316
Z-510350.ZL-N12BA-C4	5[2]	66,2	**280**	410	300	313
Z-517796.ZL	3	164	**290**	440	310	328
Z-524289.02.ZL	2	130	**300**	420	300	332
Z-517795.ZL	1	233	**300**	460	350	341
Z-574469.ZL	3	115	**310**	440	240	345
Z-532220.ZL	1	161	**320**	440	340	350
F-804571.ZL	4	138	**320**	460	240	364
Z-532592.ZL	3	196	**320**	470	350	357
Z-532583.ZL	1	193	**320**	470	350	357
Z-541851.ZL	2	219	**320**	480	350	364
Z-513654.01.ZL	1	225	**320**	480	350	364

1) Steel double comb cage.

2) Two double row bearings mounted in a set with a circumferential lubrication groove and lubrication holes in the outer rings.

3) Circumferential lubrication groove and lubrication holes in the outer rings.

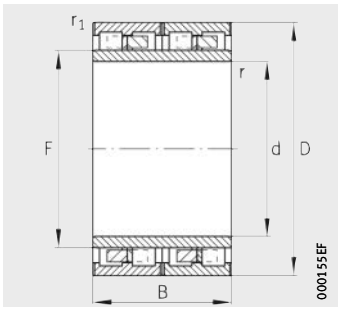

Design 3
With solid brass cage

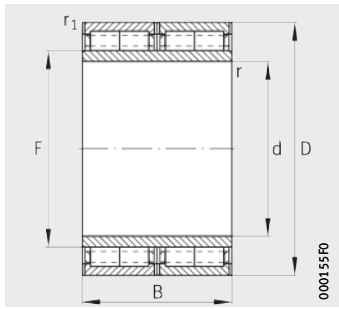

Design 4
With solid brass cage

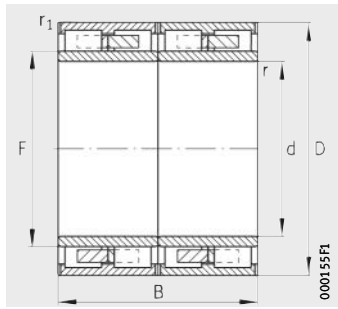

Design 5
With solid brass cage

		Basic load ratings		Fatigue limit load
r	r_1	dyn. C_r	stat. C_{0r}	C_{ur}
min.	min.	kN	kN	kN
2,1	2,1	2 450	4 300	480
3	3	2 360	3 900	420
3	3	3 250	5 400	590
2	2	2 160	3 900	420
2,1	2,1	2 040	3 900	415
2	2	2 080	4 250	460
3	3	2 500	4 500	490
3	3	2 400	4 250	460
12,5X30°	1,2	3 450	6 000	640
2,1	2,1	2 120	4 050	435
4	4	2 500	5 000	520
3	3	2 200	4 050	430
3	3	2 200	4 050	430
4	4	4 000	6 800	710
4	1,5	4 300	7 200	760
2,1	2,1	2 500	5 100	530
4	2,5	3 750	6 800	325
3	3	2 280	4 300	450
3	3	2 400	4 550	480
2,1	2,1	3 150	6 400	670
3	2	3 600	6 800	700
4	4	2 500	6 300	560
4	4	2 850	6 900	620
4	4	4 250	6 950	700
7X20°	1,5	4 150	8 000	810
4	2,5	5 500	9 650	960
3	3	3 250	5 700	580
4	1,5	5 000	10 400	1 050
3	3	3 750	7 200	710
5	–	5 200	9 300	930
5	–	5 850	10 800	1 080
4	1,5	5 600	9 800	980
12X20°	1,5	5 850	10 800	1 070

Cylindrical roller bearings

Four-row, with cylindrical bore,
for tight fit on roll journals

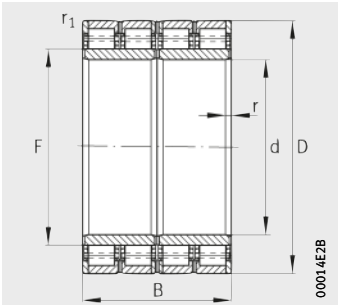

Design 1
With pin cage

Dimension table (continued) · Dimensions in mm

Designation	Design	Mass	Dimensions			
		m	d	D	B	F
		≈kg				
Z-543447.ZL	2	174	**330**	460	340	365
Z-521593.01.ZL	1	176	**330**	460	340	365
Z-527634.ZL	2	205	**340**	480	350	378
Z-525837.01.ZL	1	209	**340**	480	350	378
Z-541185.ZL	1	203	**340**	480	350	378
Z-517794.ZL	1	253	**340**	500	370	385
Z-545171.ZL	1	379	**340**	560	380	396
Z-532381.ZL-N12BA	5[1)]	122	**350**	500	380	389
Z-532001.ZL	1	268	**350**	500	410	388
Z-568450.ZL	2	220	**350**	520	300	401
Z-562913.ZL	2	264	**360**	520	380	405
Z-517793.01.ZL	1	274	**360**	520	380	405
Z-543975.ZL	2	250	**370**	520	380	409
Z-524678.01.ZL	1	251	**370**	520	380	409
Z-541192.ZL	1	261	**370**	520	380	409
Z-576360.ZL	3[2)]	182	**380**	520	290	418
Z-541982.ZL	2	217	**380**	540	300	421
Z-545768.ZL	1	221	**380**	540	300	421
Z-544794.ZL	2	298	**380**	540	400	422
Z-517792.ZL	1	303	**380**	540	400	422
Z-578278.ZL	1	224	**390**	540	320	431
Z-533426.ZL	1	254	**400**	540	380	436
Z-513769.01.ZL	1	321	**400**	560	410	445
Z-542395.ZL	2	408	**400**	590	440	450
Z-513770.ZL	1	421	**400**	590	440	450
Z-543736.ZL	2	280	**410**	560	400	450
Z-561005.ZL	1	293	**410**	560	400	450
Z-517436.ZL	1	435	**410**	600	440	460
Z-533053.ZL-N12BA	5[1)]	128	**420**	580	320	463
Z-545467.ZL	2	409	**420**	600	440	470
Z-517464.ZL	1	414	**420**	600	440	470
Z-526415.ZL	1	243	**430**	570	340	465
Z-543174.ZL	1	386	**433**	600	435	478

1) Two double row bearings mounted in a set with a circumferential lubrication groove and lubrication holes in the outer rings.

2) Circumferential lubrication groove and lubrication holes in the outer rings.

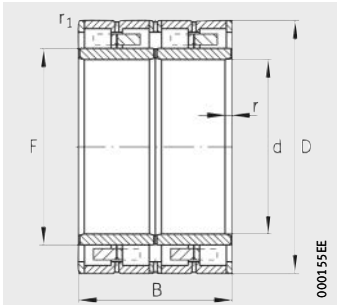

Design 2
With solid brass cage

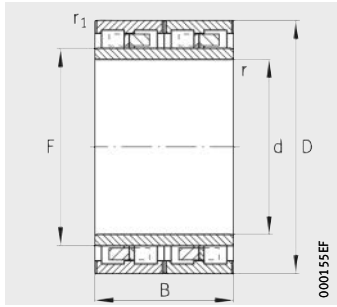

Design 3
With solid brass cage

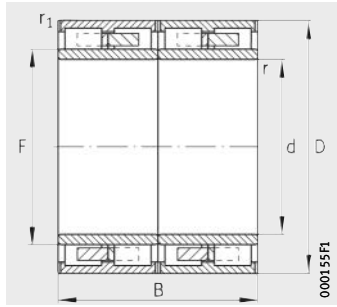

Design 5
With solid brass cage

		Basic load ratings		Fatigue limit load
r	r_1	dyn. C_r	stat. C_{0r}	C_{ur}
min.	min.	kN	kN	kN
10,5X20°	1,5	4 650	9 500	950
4	2	5 100	10 800	1 070
10X20°	1,5	5 300	11 000	1 100
10X20°	1,5	5 700	12 000	1 200
5	1,5	5 700	12 000	1 200
6	3	6 400	12 500	1 220
4	1,5	7 650	12 200	1 150
5	5	4 200	11 200	940
5	2	7 100	14 300	1 410
5	5	5 100	8 800	830
13,5X20°	2	6 200	12 200	1 190
13,5X20°	2	6 550	13 200	1 270
10X20°	1,5	6 200	12 200	1 190
10X20°	1,5	6 400	12 900	1 250
10X20°	1,5	6 400	12 900	1 250
4	4	4 500	9 000	850
3	1	5 100	9 150	840
8,5X20°	2	5 850	10 800	1 010
5	2	6 700	13 400	1 300
5	2	7 100	15 000	1 430
10X20°	3	5 500	11 000	1 100
5	2	6 400	14 000	1 330
12X20°	2	7 800	16 600	1 590
4	4	8 300	16 000	1 490
4	4	9 150	17 600	1 670
11X20°	2	6 950	14 600	1 380
11X20°	2	7 650	16 600	1 550
13X20°	1,6	9 300	18 600	1 740
4	4	3 900	10 400	830
14X20°	1,6	8 150	17 000	1 550
14X20°	1,6	8 800	19 000	1 760
5	2	6 000	12 700	1 170
14X30°	2	9 150	19 600	1 810

Cylindrical roller bearings

Four-row, with cylindrical bore,
for tight fit on roll journals

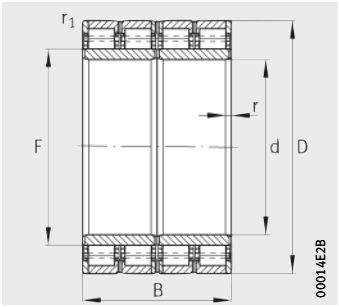

Design 1
With pin cage

Dimension table (continued) · Dimensions in mm

Designation	Design	Mass	Dimensions			
		m	d	D	B	F
		≈kg				
Z-545628.ZL	2	427	**440**	620	450	487
Z-517454.01.ZL	1	434	**440**	620	450	487
Z-560371.ZL	1	479	**447,295**	635,176	464	495
Z-542648.ZL	1	311	**450**	590	435	486
Z-529095.ZL	2	1 140	**459,95**	760	600	535
Z-541756.ZL	1	375	**460**	650	355	509,5
Z-513584.01.ZL	1	446	**460**	650	424	510
Z-518846.ZL	1	498	**460**	650	470	509
Z-547660.ZL	2	429	**480**	650	450	525
Z-547659.ZL	1	437	**480**	650	450	525
Z-533522.ZL	1	500	**480**	680	420	528
Z-514445.02.ZL	1	582	**480**	680	500	532
Z-546152.ZL	1	656	**480**	700	500	534
Z-523399.ZL	2	691	**480**	700	530	536
Z-533023.ZL	1	464	**500**	670	450	556
Z-546335.ZL	1	479	**500**	680	450	550
Z-517692.ZL	1	612	**500**	700	500	554
Z-530488.ZL	1	640	**500**	710	480	558
Z-513378.01.ZL	1	735	**500**	720	530	568
Z-567725.01.ZL	1[1)]	513	**510**	680	500	560
Z-541646.ZL	1	728	**510**	730	520	565
Z-517690.ZL	1	892	**510**	760	550	570
Z-541647.ZL	1	785	**520**	750	530	576
Z-537383.ZL	2	740	**530**	760	520	587
Z-531597.ZL	1	797	**530**	760	520	587
Z-517689.01.ZL	1	946	**530**	780	570	601
Z-543481.ZL	1	1 650	**530**	870	670	615
Z-524544.01.ZL	1	849	**536,176**	762,03	559	598
Z-560507.ZL	2	815	**536,176**	762,03	559	598
Z-532843.ZL	1	639	**550**	740	510	600
Z-517688.ZL	1	974	**550**	800	560	610
Z-517687.01.ZL	1	1 100	**560**	820	600	625
Z-514444.ZL	1	1 020	**571,1**	812,97	594	636

1) Bearing with four inner rings.

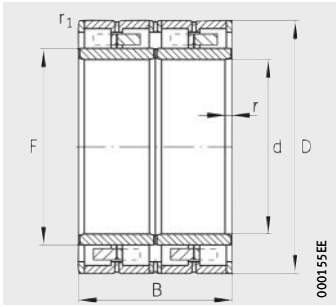

Design 2
With solid brass cage

		Basic load ratings		Fatigue limit load
r	r_1	dyn. C_r	stat. C_{0r}	C_{ur}
min.	min.	kN	kN	kN
12X20°	3	8 800	18 000	1 650
12X20°	3	9 500	20 000	1 820
5	3	10 000	20 400	1 880
5	2	8 150	19 000	1 760
5	4,5	16 000	29 000	2 550
12X20°	3	7 350	14 300	1 270
6	3	9 000	18 300	1 660
14X20°	2,5	10 400	22 000	2 000
15X20°	3	9 000	19 600	1 750
15X20°	3	9 800	22 000	1 970
15X20°	3	9 800	19 300	1 730
15X20°	2,5	11 600	24 000	2 170
6	4	12 200	23 600	2 110
6	6	11 200	22 800	2 060
15X20°	4	9 000	22 800	2 050
5	2	10 200	22 800	2 010
6	3	11 600	25 000	2 240
18X20°	5	11 200	23 200	2 080
17X20°	3	12 700	27 500	2 450
7,5	3	10 400	25 500	2 300
6	3	13 400	28 000	2 470
16X20°	3	14 600	28 000	2 430
6	3	13 700	28 000	2 450
8	3	12 000	24 000	2 080
12X20°	6	13 700	29 000	2 550
15X20°	2,5	14 600	30 500	2 650
7,5	5	21 200	38 000	3 200
18X20°	3	13 400	30 000	2 650
5	2	14 600	31 500	2 750
15X20°	2	12 200	28 500	2 490
18,5X20°	4	15 000	30 500	2 600
20X20°	4	16 300	33 500	2 850
14X20°	4	16 000	35 500	3 000

Cylindrical roller bearings

Four-row, with cylindrical bore,
for tight fit on roll journals

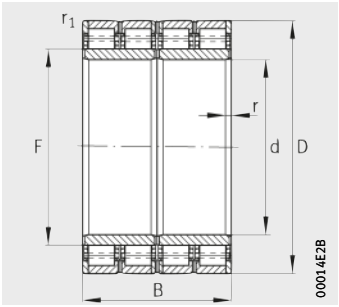

Design 1
With pin cage

Dimension table (continued) · Dimensions in mm

Designation	Design	Mass	Dimensions			
		m	d	D	B	F
		≈kg				
Z-517685.ZL	1	1 260	**580**	850	640	648
Z-526413.ZL	2	605	**585**	770	480	630
Z-518780.ZL	1	886	**600**	820	550	660
Z-528518.ZL	1	936	**600**	820	575	660
Z-533259.ZL	1	1 110	**600**	870	540	672
Z-517684.01.ZL	1	1 310	**600**	870	640	672
Z-561221.ZL	1	1 400	**628**	922	600	702
Z-515141.ZL	1	1 430	**634,5**	901,87	674	705
Z-515194.01.ZL	1	1 470	**650**	920	670	723
Z-533258.ZL	1	827	**670**	870	530	725
Z-517682.ZL	1	1 610	**670**	950	690	740
Z-533683.ZL	1	1 290	**680**	940	600	743
Z-524229.ZL	1	1 640	**680**	980	640	760
Z-517681.ZL	1	1 800	**690**	980	715	767,5
Z-530487.ZL	1	1 210	**700**	930	620	763
Z-517680.01.ZL	1	1 820	**710**	1 000	715	787,5
Z-522815.ZL	1	2 220	**725**	1 040	750	809
Z-525438.ZL	1	1 220	**730**	960	620	790
Z-517679.ZL	1	2 040	**730**	1 030	750	809
Z-524881.01.ZL	1	1 500	**750**	1 000	670	813
F-800494.ZL	1	1 970	**750**	1 090	615	836
Z-524238.01.ZL	1	2 360	**761,425**	1 079,6	787	846
Z-540088.ZL	1	2 170	**780**	1 070	780	853
Z-517678.ZL	1	2 600	**790**	1 120	810	875
Z-526169.ZL	1	1 920	**800**	1 080	700	878
Z-524137.ZL	1	2 950	**800**	1 150	850	888
F-803317.ZL	1	2 480	**820**	1 130	800	903
Z-567729.ZL	1	1 720	**830**	1 080	710	896
Z-545636.ZL	1	2 580	**850**	1 150	840	928
Z-523397.ZL	1	3 570	**850**	1 220	900	960
Z-529054.ZL	1	1 900	**860**	1 131,57	670	940
Z-524239.01.ZL	1	3 480	**863**	1 219,302	889[1)]	956
Z-566883.ZL	1	2 460	**865**	1 180	750	945,3
Z-523419.ZL	1	2 950	**870**	1 180	880	950

[1)] Inner ring width 873,3 mm.

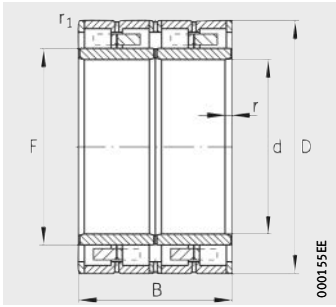

Design 2
With solid brass cage

		Basic load ratings		Fatigue limit load
r	r_1	dyn. C_r	stat. C_{0r}	C_{ur}
min.	min.	kN	kN	kN
20X20°	4	18 000	38 000	3 200
5	2,5	11 600	27 000	2 340
6	3	14 000	33 500	2 800
15X20°	3	15 000	35 500	3 050
22X20°	4	15 300	31 000	2 550
20X20°	3	18 300	40 000	3 300
18X20°	6	19 000	38 000	3 050
20X15°	3	20 400	45 000	3 700
18X20°	4	20 800	46 500	3 800
6	3	13 700	34 500	2 900
18X20°	4	22 400	50 000	4 000
7,5	4	19 000	42 500	3 400
20X20°	4	21 200	45 000	3 550
20X20°	4	22 800	52 000	4 150
18X20°	3	17 000	44 000	3 650
22X20°	4	23 200	53 000	4 250
7,5	3	25 500	58 500	4 600
20X20°	3	17 600	45 000	3 650
20X20°	6	25 500	58 500	4 600
20X20°	3	20 400	50 000	4 000
7,5	7,5	21 600	43 000	3 300
22X20°	5	28 000	63 000	4 900
7,5	5	26 500	64 000	5 100
7,5	4	30 000	69 500	5 400
25X20°	3	22 800	58 500	4 500
9,5	9,5	31 000	69 500	5 300
7,5	7,5	27 000	67 000	4 900
20X20°	2,5	22 800	61 000	4 750
23X20°	4	30 500	76 500	5 800
23X20°	5	36 000	85 000	6 400
7,5	4	23 200	60 000	6 400
13X20°	5	34 500	85 000	6 400
20X20°	8,5	27 500	64 000	4 900
8	8	32 000	81 500	6 100

Cylindrical roller bearings

Four-row, with cylindrical bore,
for tight fit on roll journals

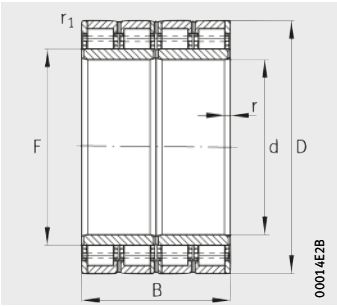

Design 1
With pin cage

Dimension table (continued) · Dimensions in mm

Designation	Design	Mass	Dimensions			
		m	d	D	B	F
		≈kg				
Z-527048.ZL	1	2 950	**900**	1 220	840	989
Z-541812.ZL	1	3 950	**900**	1 280	930	1 000
Z-527977.ZL	1	3 130	**937,5**	1 270,25	826	1 027
Z-517676.ZL	1	4 380	**940**	1 320	1 000	1 029
Z-517369.01.ZL	1	5 030	**950**	1 360	1 000	1 075
Z-580309.ZL	1	3 450	**980**	1 310	880	1 061,7
Z-517740.ZL	1	4 670	**980**	1 360	1 000	1 080
Z-522071.ZL	1	3 270	**990**	1 360	760	1 080
Z-527021.ZL	1	3 520	**1 000**	1 360	800	1 101
Z-517675.ZL	1	5 070	**1 040**	1 440	1 000	1 133
Z-521910.ZL	1	3 010	**1 060**	1 360	800	1 137
Z-517737.ZL	1	5 300	**1 100**	1 500	1 000	1 194
Z-518206.ZL	1	3 620	**1 150**	1 500	760	1 240
Z-518649.ZL	1	5 790	**1 200**	1 590	1 050	1 305
Z-518578.ZL	1	7 010	**1 200**	1 620	1 150	1 305
Z-528717.ZL	1	9 470	**1 400**	1 900	1 150	1 520
Z-534900.ZL	1	9 880	**1 500**	1 950	1 230	1 610

		Basic load ratings		Fatigue limit load
r	r_1	dyn. C_r	stat. C_{0r}	C_{ur}
min.	min.	kN	kN	kN
24X20°	4	31 500	80 000	6 000
6	3	36 500	85 000	6 300
25X20°	4	32 000	80 000	5 900
7,5	4	41 500	98 000	7 200
9,5	5	44 000	108 000	7 900
20X20°	6	35 500	93 000	6 900
25X20°	5	41 500	106 000	7 800
12	6	30 500	68 000	4 900
25X20°	3	34 000	83 000	6 000
20X20°	5	45 000	106 000	7 600
18X20°	5	32 500	91 500	6 500
7,5	4	46 500	114 000	8 000
20X20°	5	33 500	86 500	6 100
30X20°	6	47 500	129 000	8 900
9,5	9,5	56 000	146 000	10 200
40X20°	10	64 000	156 000	10 200
9,5	6	71 000	200 000	13 000

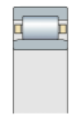

Cylindrical roller bearings

Four-row,
with cylindrical bore,
for loose fit on roll journals

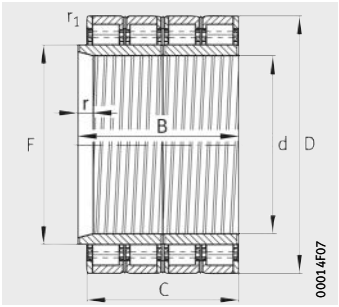

Design 6
With pin cage

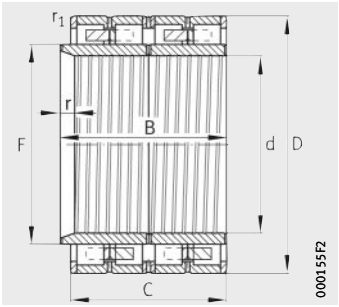

Design 7
With solid brass cage

Dimension table · Dimensions in mm

Designation	Design	Mass	Dimensions			
		m	d	D	B	C
		≈kg				
Z-580510.ZL	9[1)2)]	100	**220**	340	320	290
F-801076.ZL	9	86,5	**250**	350	320	290
Z-536897.ZL	7[3)]	79,4	**260**	370	240	220
Z-522009.ZL	8[4)]	102	**270**	380	295	275
Z-533575.ZL	8	82,9	**280**	390	240	220
Z-532504.ZL	7	134	**300**	420	320	300
Z-580511.ZL	9[2)]	160	**320**	440	370	340
Z-531839.ZL	7	211	**340**	480	370	350
Z-580512.ZL	9[2)4)]	267	**340**	500	410	370
Z-538977.ZL	6[2)]	246	**350**	500	400	380
F-801476.ZL	7	225	**350**	520	320	300
Z-533808.ZL	7	244	**360**	510	400	380
F-801082.ZL	9	258	**370**	520	410	380
Z-522007.ZL	6	290	**380**	540	400	380
Z-565463.ZL	7	286	**380**	540	400	380
Z-536713.ZL	6	306	**380**	540	420	400
F-803580.ZL	9[1)5)]	232	**390**	540	350	320
Z-561270.ZL	7	280	**410**	560	420	400
Z-561269.ZL	6	293	**410**	560	420	400
Z-533022.ZL	6	245	**430**	570	360	340
Z-579578.ZL	6	398	**440**	620	430	410
Z-572891.ZL	6	434	**440**	620	450	450
Z-561271.ZL	7	428	**440**	620	470	450
Z-533578.ZL	6	438	**440**	620	470	450
F-808290.ZL	9[1)5)]	444	**440**	620	485	450
Z-532465.ZL	6[2)]	500	**460**	650	470	470
Z-536712.ZL	6[6)]	513	**460**	650	490	470
Z-567014.ZL	6	526	**460**	680	410	410
Z-524081.ZL	6	322	**480**	620	420	400
Z-533487.ZL	6	439	**480**	650	450	450

1) With rib washers.
2) Chamfer distance instead of inner ring bevel.
3) Single-piece inner ring.
4) Circumferential lubrication groove and lubrication holes in the outer rings.
5) With pin cages.
6) Without helical groove in bearing bore.

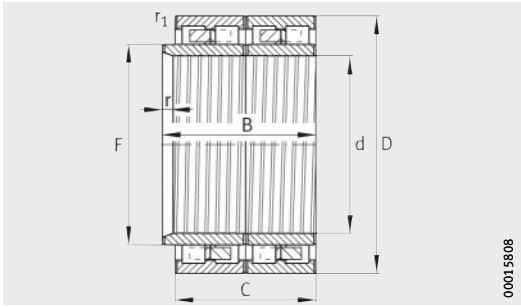

Design 8
With solid brass cage

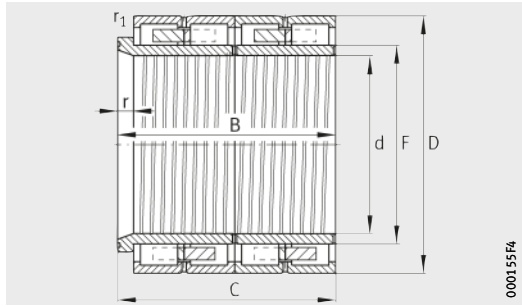

Design 9
With solid brass cage

			Basic load ratings		Fatigue limit load
F	r min.	r_1 min.	dyn. C_r kN	stat. C_{0r} kN	C_{ur} kN
250	3	2	3 550	5 850	640
277	28X20°	3	3 100	6 000	650
292	15X20°	2,5	2 200	4 050	430
300	15,5X15°	2,1	3 550	6 800	720
312	17X20°	3	2 280	4 300	450
332	15X20°	2	4 150	8 000	820
350	4	1,5	4 650	9 500	950
378	15X20°	1,5	5 300	11 000	1 100
385	6	3	5 850	11 200	1 110
388	6	3	6 550	13 200	1 280
401	28X20°	5	5 100	8 800	830
399	28X15°	2	6 100	11 800	1 150
409	30X20°	1,5	6 100	11 800	1 150
424	35X15°	1,5	6 700	13 700	1 300
422	20X20°	1,5	6 700	13 200	1 250
422	34X15°	2	7 100	15 000	1 430
431	10X20°	2	5 500	11 000	1 100
450	32X15°	2	6 700	13 700	1 300
450	30X15°	2	7 500	16 000	1 520
465	35X15°	5	6 200	13 200	1 230
487	12X20°	2	8 650	17 600	1 590
487	12X20°	3	9 500	20 000	1 820
487	32X20°	3	9 300	19 300	1 760
487	30X20°	3	9 500	20 000	1 820
487	44X10,3°	3	9 500	20 000	1 820
509	6	2,5	10 400	22 000	2 000
509	34X15°	2,5	10 400	22 000	2 000
516	14X20°	2,5	9 800	18 300	1 650
515	4	2	7 800	18 300	1 680
525	12,5X20°	3	9 800	22 000	1 970

Cylindrical roller bearings

Four-row,
with cylindrical bore,
for loose fit on roll journals

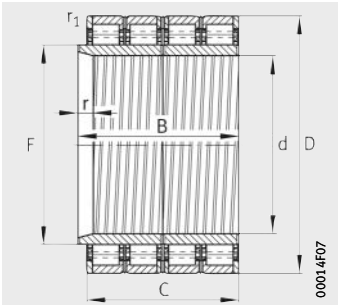

Design 6
With pin cage

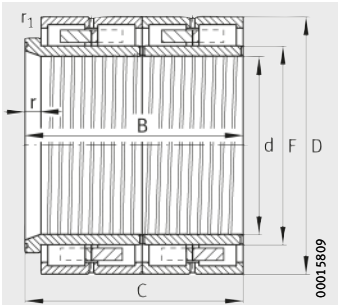

Design 9
With solid brass cage

Dimension table (continued) · Dimensions in mm

Designation	Design	Mass	Dimensions			
		m	d	D	B	C
		≈kg				
Z-540386.ZL	6	459	**500**	670	450	450
Z-564182.ZL	6	454	**500**	670	470	450
Z-579713.ZL	9[1)2)]	809	**530**	760	555	520
Z-566466.ZL	6	845	**536,176**	762,03	559	558,8
Z-579741.ZL	6	645	**550**	740	527	510
Z-532470.ZL	6[3)]	1 160	**570**	830	630	600
Z-572176.ZL	6	1 020	**571,1**	812,97	594	594
Z-565652.ZL	6	942	**600**	820	575	575
Z-572137.ZL	9	1 260	**600**	870	578	540

1) With pin cages.
2) With rib washers.
3) Without helical groove in bearing bore.

			Basic load ratings		Fatigue limit load
F	r min.	r_1 min.	dyn. C_r kN	stat. C_{0r} kN	C_{ur} kN
540	13X20°	5	9 500	21 200	1 880
540	34X15°	4	9 500	21 600	1 900
587	45X12,5°	2,5	13 700	29 000	2 550
598	18X20°	4	13 400	30 000	2 650
600	15X20°	2	12 200	28 500	2 490
635	35X15°	4	16 600	34 500	2 950
636	15X20°	5	16 000	35 500	3 000
660	15X20°	3	15 000	35 500	3 050
672	53X12°	4	15 300	31 000	2 550

Cylindrical roller bearings

Four-row, with tapered bore
(taper 1:12)

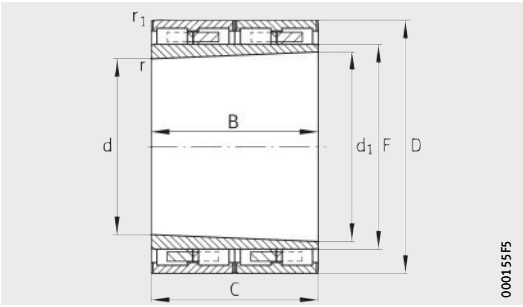

Design 10

Dimension table · Dimensions in mm

Designation	Design	Mass	Dimensions			
		m	d	d_1	D	B
		≈kg				
Z-506743.01.ZL	10	57,1	**230**	248,333	330	220
Z-500857.01.ZL	11	58,8	**231**	249,333	330	220
Z-507518.ZL	10	121	**260**	283,75	400	285
Z-522518.01.ZL	10	109	**260**	280,833	400	250
Z-505356.ZL	12	211	**320**	349,167	480	350
Z-510302.01.ZL	12	328	**356,667**	390	550	400
Z-527181.ZL	10[1)2)]	580	**412,335**	453,002	650	488
Z-538221.ZL	10[2)3)]	382	**440**	469,583	650	355
Z-527388.ZL	12[3)]	806	**485**	530	740	540
Z-577938.ZL	12[3)]	803	**485**	530	740	540

1) Circumferential lubrication groove and lubrication holes in the outer rings.

2) Without lubrication grooves in the end faces of the outer rings.

3) With pin cage.

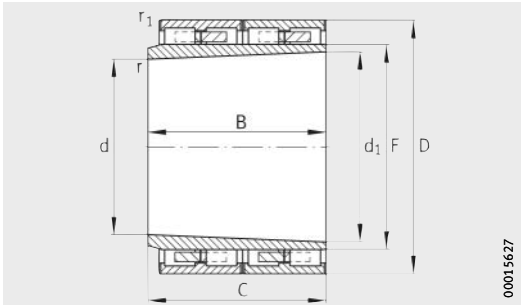

Design 11

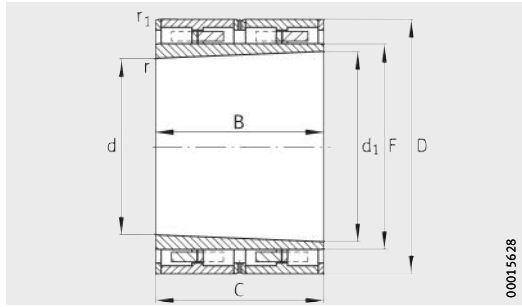

Design 12

				Basic load ratings		Fatigue limit load
C	F	r min.	r_1 min.	dyn. C_r kN	stat. C_{0r} kN	C_{ur} kN
220	266	2,1	1	2 200	4 250	455
235	270	1,5	2	2 080	4 250	460
285	316	4	1,5	3 400	6 300	650
250	310	1,5	3	3 000	5 400	550
350	378	1,5	1,5	5 400	11 200	1 090
400	423,4	2,5	4	6 700	13 400	1 270
488	494,5	4	1,5	9 650	18 600	1 720
355	509,5	6	3	8 800	17 600	1 600
540	572	3	5	13 200	27 500	2 410
540	572,3	5	5	13 200	27 500	2 410

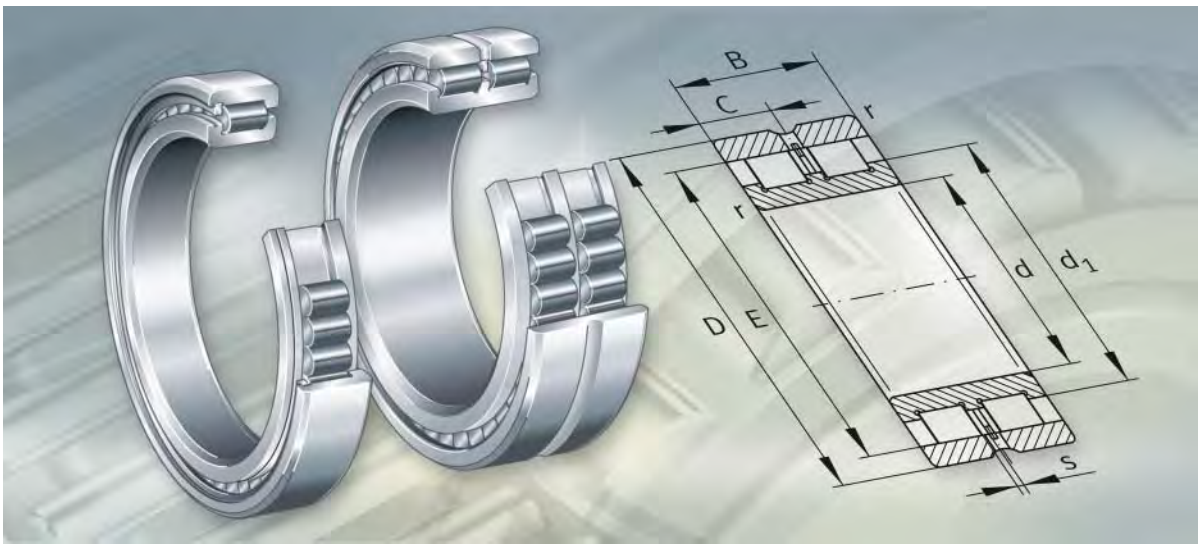

Full complement cylindrical roller bearings

Full complement cylindrical roller bearings

		Page
Product overview	Full complement cylindrical roller bearings	444
Features	Bearings of TB design	445
	Non-locating bearings	445
	Semi-locating bearings	446
	Locating bearings	446
	Operating temperature	447
	Suffixes	447
Design and safety guidelines	Permissible skewing	448
	Axial load carrying capacity	448
	Equivalent dynamic bearing load	450
	Equivalent static bearing load	451
	Minimum radial load	451
	Design of bearing arrangements	451
Accuracy	Radial internal clearance	453
Dimension tables	Cylindrical roller bearings, full complement, single row, semi-locating bearings	454
	Cylindrical roller bearings, full complement, double row, semi-locating bearings, locating bearings, non-locating bearings	458
	Cable sheave bearings (cylindrical roller bearings with annular slots), full complement, sealed, locating bearings	462



Non-locating bearings

Double row

SL0248, SL0249

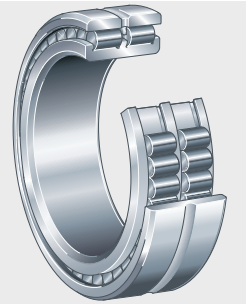

Semi-locating bearings

Single row

SL1818, SL1829, SL1830, SL1822



SL1923

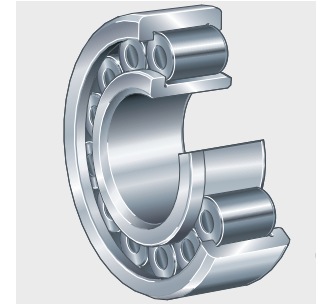

Double row

SL1850

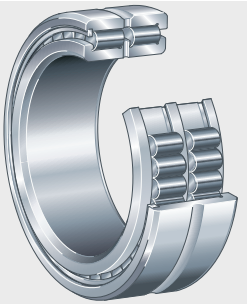

Locating bearings

Double row, open

Cable sheave bearings, sealed

SL0148, SL0149



SL0450..-PP, SL04..-PP

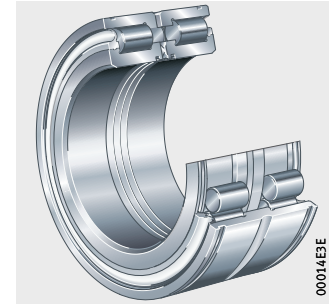

Features

Full complement cylindrical roller bearings comprise solid outer and inner rings and rib-guided cylindrical rollers. Since these bearings have the largest possible number of rolling elements, they have extremely high radial load carrying capacity, high rigidity and are suitable for particularly compact designs. Due to the kinematic conditions, however, they do not achieve the high speeds that are possible when using cylindrical roller bearings with cage.

Single row full complement cylindrical roller bearings are available as non-locating, semi-locating and locating bearings.

Bearings of TB design

In the case of bearings of TB design, the axial load carrying capacity of cylindrical roller bearings was significantly improved with the aid of new calculation and manufacturing methods.

A special curvature on the end faces of the rollers ensures optimum contact conditions between roller and rib.
As a result, the axial contact pressures on the rib are significantly minimised and a lubricant film capable of supporting higher loads is formed. Under normal operating conditions, wear and fatigue at the rib contact running and roller end faces are completely eliminated.

In addition, axial torque is reduced by up to 50%. The bearing temperature during operation is therefore significantly lower.

Non-locating bearings

Bearings SL0248 (designation to DIN 5 412-9: NNCL 48..V) and bearings SL0249 (designation to DIN 5 412-9: NNCL 49..V) are double row non-locating bearings and can support radial forces only.

The bearings are held together in handling and transport by a transport and mounting retaining device on the outer ring. This retaining device remains in the bearing and must not be subjected to axial load.

Axial displacement

The outer ring without ribs can be axially displaced in both directions in relation to the inner ring. The inner ring has ribs on both sides.

Sealing

The cylindrical roller bearings are of an open design.

Lubrication

The bearings can be lubricated with oil or grease.
For lubrication, the outer ring has a lubrication groove and lubrication holes.

Semi-locating bearings

Semi-locating bearings are available in a single row design as SL1818 (dimension series 18), SL1829 (dimension series 29), SL1830 (dimension series 30), SL1822 (dimension series 22) and SL1923 (dimension series 23).
Bearings of series SL1850 (dimension series 50) are of a double row design.

They can support not only high radial forces but also axial forces in one direction and can therefore guide shafts axially in one direction. They act as non-locating bearings in the opposite direction.

Series SL1923 has only one rib on the inner ring and a self-retaining rolling element set. As a result, the inner ring can be removed from the bearing. As a result, mounting and dismounting is considerably easier.



The bearings SL1818, SL1829, SL1830, SL1822 and SL1850 are held together in handling and transport by a transport and mounting retaining device on the outer ring. This retaining device remains in the bearing and must not be subjected to axial load.

Axial displacement of the inner ring

The inner ring can be axially displaced in one direction by the dimension “s”, see dimension table.

Sealing

The cylindrical roller bearings are supplied in an open design.

Lubrication

The single row bearings can be lubricated via the end faces with oil or grease.

Locating bearings

Bearings SL0148 (designation to DIN 5 412-9: NNC 48..V) and bearings SL0149 (designation to DIN 5 412-9: NNC 49..V) are double row locating bearings. These bearings can support axial forces in both directions as well as radial forces.



The outer ring has ribs on both sides, is axially split and held together by retaining rings. The inner ring has an additional central rib. The retaining rings must not be subjected to axial load.

Cable sheave bearings

Cable sheave bearings (cylindrical roller bearings with annular slots) are locating bearings. These bearings are very rigid and can support moderate axial forces in both directions as well as high radial forces. They comprise solid outer and inner rings with ribs, rib-guided cylindrical rollers and sealing rings.

The outer rings have annular slots for retaining rings.
The inner rings are axially split, 1 mm wider than the outer rings and held together by a rolled-in steel strip.

Cylindrical roller bearings with annular slots are available as a light series SL04..-PP and in the dimension series 50 as SL0450..-PP.

Sealing

In the case of cable sheave bearings, the rolling element system is protected against contamination and moisture by sealing rings on both sides.

Lubrication

Open locating bearings can be lubricated with oil or grease. For lubrication, the outer ring has a lubrication groove and lubrication holes.

Cable sheave bearings are greased using a lithium complex soap grease to GA08 and can be lubricated via the outer or inner ring. Arcanol LOAD150 is suitable for relubrication.

Operating temperature

Open full complement cylindrical roller bearings are suitable for operating temperatures from –30 °C to +120 °C.

Cylindrical roller bearings with annular slots are suitable for operating temperatures from –20 °C to +80 °C, restricted by the grease and seal material.

Suffixes

Suffixes for available designs: see table.

Available designs

Suffix	Description	Design
BR	Black oxide coated	Special design, available by agreement only
C3	Radial internal clearance larger than normal	
C4	Radial internal clearance larger than C3	
C5	Radial internal clearance larger than C4	
E	Increased capacity design	
P	Seal on one side	
PP	Seals on both sides	Standard
RR	Corrosion-resistant design, with Corrotect® coating	Special design, available by agreement only
2NR	Cable sheave bearing supplied with two loose-packed retaining rings WRE	
–	Without seals	
TB	Bearing with increased axial load carrying capacity	

Available bearings of TB design

Series available by agreement	From bore diameter d mm
SL1818	460
SL1822	180
SL1829	300
SL1830	240
SL1923	150
SL1850	300

Design and safety guidelines

Permissible skewing

There is no significant reduction in rating life if the misalignment of the inner ring relative to the outer ring does not exceed the following values:

- 4′ in bearings of series SL1818
- 3′ in bearings of series SL1923, SL1822, SL1829, SL1830.

Double row bearings do not permit any skewing between the inner and outer ring.

Axial load carrying capacity

Radial cylindrical roller bearings used as semi-locating and locating bearings can support axial forces in one or both directions in addition to radial forces.

The axial load carrying capacity is dependent on:

- the size of the sliding surfaces between the ribs and the end faces of the rolling elements
- the sliding velocity at the ribs
- the lubrication of the contact surfaces
- tilting of the bearings (in single row bearings).

Ribs subjected to load must be supported across their entire height.

The permissible axial load $F_{a\ per}$ must not be exceeded in order to avoid an unacceptable increase in temperature.

The axial limiting load $F_{a\ max}$ must not be exceeded, in order to avoid impermissible pressure at the contact surfaces.

The ratio F_a/F_r must not exceed the value 0,4.

In the case of bearings of TB design, the value 0,6 is permissible.

Continuous axial loading without simultaneous radial loading is not permissible.

Permissible and maximum load

The axial load $F_{a\ per}$ and the limiting load $F_{a\ max}$ are calculated according to the following equations.

Bearings in standard design

$$F_{a\,per} = k_S \cdot k_B \cdot d_M^{1,5} \cdot n^{-0,6} \leqq F_{a\,max}$$

Bearings of TB design

$$F_{a\,per} = 1,5 \cdot k_S \cdot k_B \cdot d_M^{1,5} \cdot n^{-0,6} \leqq F_{a\,max}$$

Bearings of standard and TB design

$$F_{a\,max} = 0,075 \cdot k_B \cdot d_M^{2,1}$$

$F_{a\ per}$ N
Permissible axial load

$F_{a\ max}$ N
Axial limiting load

k_S –
Factor as a function of the lubrication method, see table

k_B –
Factor as a function of the bearing series, see table, page 450

d_M mm
Mean bearing diameter (d + D)/2, see dimension table

n min^{-1}
Operating speed.

Cable sheave bearings

In the case of cylindrical roller bearings with annular slots, application engineering advice is necessary. The limit values and calculations for $F_{a\ per}$ and $F_{a\ max}$ are not therefore valid for these bearings.

Factor k_S for the lubrication method

Lubrication method[1)]	Factor k_S
Minimal heat dissipation, drip feed oil lubrication, oil mist lubrication, low operating viscosity ($\nu < 0,5 \cdot \nu_1$)	7,5 to 10
Poor heat dissipation, oil sump lubrication, oil spray lubrication, low oil flow	10 to 15
Good heat dissipation, recirculating oil lubrication (pressurised oil lubrication)	12 to 18
Very good heat dissipation, recirculating oil lubrication with oil cooling, high operating viscosity ($\nu > 2 \cdot \nu_1$)	16 to 24

1) Doped oils should be used, e.g. CLP (DIN 51 517) and HLP (DIN 51 524) of ISO VG classes 32 to 460 and ATF oils (DIN 51 502) and gearbox oils (DIN 51 512) of SAE viscosity classes 75 W to 140 W.

Bearing factor k_B

Series	Factor k_B
SL1818, SL0148	4,5
SL1829, SL0149	11
SL1830, SL1850	17
SL1822	20
SL1923	30

Equivalent dynamic bearing load

Non-locating bearings and cable sheave bearings

For bearings under dynamic loading, the following applies:

$$P = F_r$$

Semi-locating and locating bearings

If an axial force F_a is present in addition to the radial force F_r, the load ratio must be taken into consideration.

Load ratio and equivalent dynamic load

Load ratio	Equivalent dynamic load
$\frac{F_a}{F_r} \leq e$	$P = F_r$
$\frac{F_a}{F_r} > e$	$P = 0,92 \cdot F_r + Y \cdot F_a$

P kN
Equivalent dynamic bearing load for combined load

F_a kN
Axial dynamic bearing load

F_r kN
Radial dynamic bearing load

e, Y –
Factors, see table.

Factors e and Y

Series	Calculation factors	
	e	Y
SL1818, SL1850	0,2	0,6
SL0148, SL0149	0,4	0,5
SL1822, SL1829, SL1830, SL1923	0,3	0,4

Equivalent static bearing load

For bearings under static loading, the following applies:

$$P_0 = F_{0r}$$

P_0 kN
Equivalent static bearing load

F_{0r} kN
Radial static bearing load.

Minimum radial load

In continuous operation, a minimum radial load of the order of $F_{r\,min} = C_{0r}/60$ is necessary.

If $F_{r\,min} < C_{0r}/60$, please contact us.

Design of bearing arrangements

Shaft and housing tolerances

Recommended shaft tolerances for radial bearings with cylindrical bore, see table, page 130.

Recommended housing tolerances for radial bearings, see table, page 131.

Cable sheave bearings

Cable sheave bearings are normally subjected to circumferential load on the outer ring. The outer ring must therefore have a press fit.

Axial location

In order to prevent lateral creep of the bearing rings, they must be located by force locking or form fit.

The abutment shoulders (shaft and housing) should be sufficiently high and perpendicular to the bearing axis.

The transition from the bearing seating point to the abutment shoulder must be designed with rounding to DIN 5 418 or an undercut to DIN 509. The minimum values for the chamfer dimensions r in the dimension tables must be observed.

For semi-locating bearings, the bearings only require support on one side, on the rib supporting the axial load.

In axially loaded bearings, full support must be provided for the ribs transmitting forces, *Figure 1*.

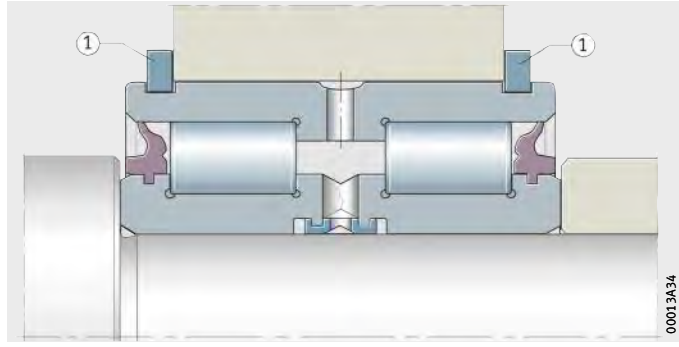

① Retaining ring

Figure 1
Axial location of outer and inner ring, support of ribs

Location of cable sheave bearings

The annular slots allow axial location of the outer rings using retaining rings, *Figure 1*, page 451. Rings of series WRE or rings to DIN 471 are suitable. Locating rings are not included in the delivery. In the design 2NR, the delivery includes two retaining rings WRE packed loose.

The split inner ring must be axially secured, *Figure 1*, page 451.

The fasteners must not be subjected to axial load.

Support of sealing rings

The sealing rings must be supported to a sufficient height, so that they are not pressed out during lubrication of the bearings, *Figure 2*. The dimension d_2 must be observed, see dimension table.

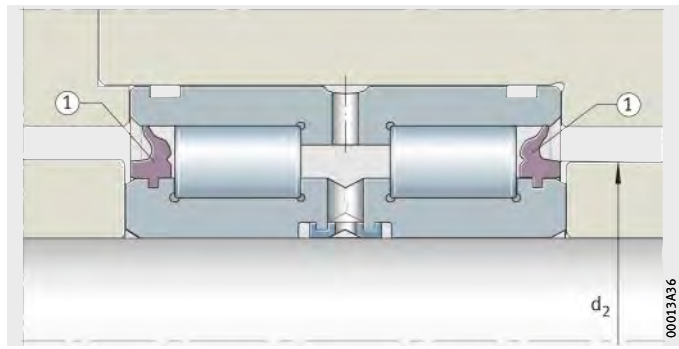

① Sealing ring

Figure 2
Support of sealing rings

Mounting and dismounting of cable sheave bearings

During mounting and dismounting of the bearings, the mounting forces must never be directed through the rolling elements, sealing rings or the fasteners on the split inner ring.

Accuracy

The dimensional and running tolerances of the bearings correspond to tolerance class PN to DIN 620.

Radial internal clearance

The radial internal clearance corresponds to internal clearance group CN to DIN 620-4.

Radial internal clearance

Bore d mm		Radial internal clearance							
		CN µm		C3 µm		C4 µm		C5 µm	
over	incl.	min.	max.	min.	max.	min.	max.	min.	max.
200	225	105	165	160	220	220	280	305	365
225	250	110	175	170	235	235	300	330	395
250	280	125	195	190	260	260	330	370	440
280	315	130	205	200	275	275	350	410	485
315	355	145	225	225	305	305	385	455	535
355	400	190	280	280	370	370	460	510	600
400	450	210	310	310	410	410	510	565	665
450	500	220	330	330	440	440	550	625	735

Single row full complement cylindrical roller bearings

Semi-locating bearings

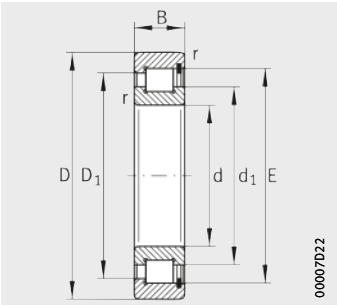

SL1818, SL1829,SL1830, SL1822

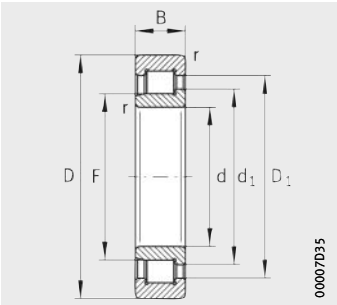

SL1923

Dimension table · Dimensions in mm

Designation	Mass	Dimensions						
	m	d	D	B	r	s[1]	F	d_1
	≈kg				min.			≈
SL192330-TB	42,1	**150**	320	108	4	7	182,49	203,3
SL192332-TB	49,7	**160**	340	114	4	7	196,38	219
SL192334-TB	59,2	**170**	360	120	4	7	203,55	226,6
SL182236	29,8	**180**	320	86	4	7	–	232,4
SL192336-TB	69,1	**180**	380	126	4	7	221,56	245
SL182238	35,65	**190**	340	92	4	9	–	243,5
SL192338-TB	80,3	**190**	400	132	5	7	224,43	250
SL182240	43,12	**200**	360	98	4	9	–	246,6
SL192340-TB	92,1	**200**	420	138	5	7	238,45	265,7
SL183044	28,4	**220**	340	90	3	9	–	254,6
SL192344-TB	111,2	**220**	460	145	5	7	266,71	297
SL182948	10,6	**240**	320	48	2,1	3	–	267,5
SL183048	30,9	**240**	360	92	3	11	–	277,5
SL192348-TB	142,3	**240**	500	155	5	10	280,55	312,5
SL181852-E	4,61	**260**	320	28	2	2	–	281
SL182952	18,5	**260**	360	60	2,1	5	–	291,5
SL183052	44,5	**260**	400	104	4	11	–	304
SL192352-TB	173,2	**260**	540	165	6	10	315,6	351,6
SL181856-E	6,89	**280**	350	33	2	2,5	–	304
SL182956	19,7	**280**	380	60	2,1	3,5	–	314
SL183056	48	**280**	420	106	4	11	–	319,5
SL181860-E	9,79	**300**	380	38	2,1	3	–	323,5
SL182960	31,2	**300**	420	72	3	5	–	338
SL183060-TB	66,6	**300**	460	118	4	14	–	353,6
SL181864-E	10,36	**320**	400	38	2,1	3	–	344,5
SL182964	32,9	**320**	440	72	3	5	–	358,5
SL183064-TB	71,7	**320**	480	121	4	14	–	369,5
SL181868-E	10,93	**340**	420	38	2,1	3	–	365,5
SL182968	34,7	**340**	460	72	3	5	–	379
SL183068-TB	95,8	**340**	520	133	5	16	–	396,1
SL181872-E	11,49	**360**	440	38	2,1	3	–	387
SL182972	36,4	**360**	480	72	3	5	–	399,5
SL183072-TB	101	**360**	540	134	5	16	–	414
SL181876-E	18,87	**380**	480	46	2,1	4	–	415,5
SL182976	52,1	**380**	520	82	4	5	–	426
SL183076-TB	106	**380**	560	135	5	16	–	431,7

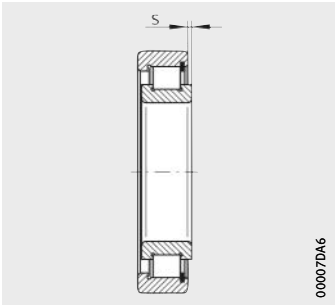

1) Axial displacement “s”

		Basic load ratings		Fatigue limit load	Limiting speed	Reference speed
D_1	E	dyn. C_r	stat. C_{0r}	C_{ur}	n_G	n_B
≈		kN	kN	kN	min^{-1}	min^{-1}
263,5	–	1 680	1 900	265	1 380	840
284,4	–	1 900	2 170	300	1 280	760
295	–	2 070	2 380	320	1 240	730
279,5	294	1 180	1 760	208	1 270	800
312,9	–	2 190	2 600	345	1 160	670
295,5	311,5	1 300	1 900	223	1 210	770
326,8	–	2 500	2 950	390	1 120	630
302,4	319,4	1 410	2 010	235	1 180	770
347,2	–	2 800	3 300	420	1 060	570
299,2	312	1 150	1 820	209	1 170	800
388,3	–	3 000	3 450	425	950	520
294,4	303,7	600	1 120	124	1 150	750
322,1	336	1 210	1 990	224	1 080	720
408,5	–	3 300	3 800	465	900	500
301,5	308	275	530	54	1 110	790
323,4	333,7	780	1 450	160	1 060	690
358,4	375,97	1 600	2 500	280	980	620
459,6	–	4 000	4 700	560	800	410
327	335	355	670	69	1 030	730
348,5	359,5	910	1 710	184	980	590
372,9	390,3	1 650	2 650	290	940	590
350,5	360	455	840	86	960	680
376,9	389,45	1 170	2 200	235	910	540
415,6	434,85	2 020	3 300	325	840	500
371,5	381	470	900	90	910	620
397,4	409,85	1 210	2 340	246	860	495
430,1	449,5	2 080	3 450	340	810	480
392,5	402,2	485	960	94	860	570
418,7	430,2	1 250	2 470	255	810	460
463,9	485,65	2 490	4 150	400	750	430
413,5	423,5	500	1 010	98	810	530
438,6	450,6	1 280	2 600	265	770	430
481,6	503,45	2 550	4 350	410	720	405
448	459	650	1 290	126	750	490
472,1	486,7	1 660	3 300	335	720	380
499,5	521,25	2 600	4 450	425	700	390

Single row full complement cylindrical roller bearings

Semi-locating bearings

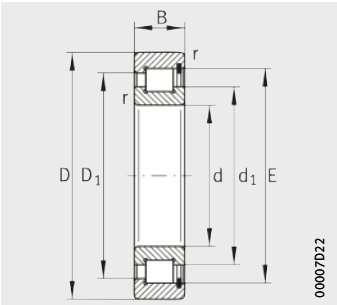

SL1818, SL1829, SL1830

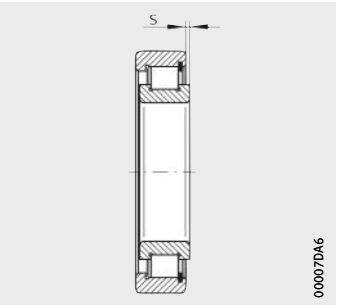

1) Axial displacement “s”

Dimension table (continued) · Dimensions in mm

Designation	Mass	Dimensions					
	m	d	D	B	r	s[1)]	d_1
	≈kg				min.		≈
SL181880-E	19,81	**400**	500	46	2,1	4	432
SL182980	54,3	**400**	540	82	4	5	450
SL183080-TB	140	**400**	600	148	5	18	462,5
SL181884-E	20,6	**420**	520	46	2,1	4	457
SL182984	56,9	**420**	560	82	4	5	462
SL181888-E	21,54	**440**	540	46	2,1	4	473,5
SL182988	78,1	**440**	600	95	4	7	490
SL181892-E	33,21	**460**	580	56	3	5	501,5
SL182992	81,1	**460**	620	95	4	7	504
SL181896-E	34,53	**480**	600	56	3	5	522
SL182996	94,7	**480**	650	100	5	7	538
SL1818/500-E	35,73	**500**	620	56	3	5	542
SL1829/500	98,3	**500**	670	100	5	7	553

		Basic load ratings		Fatigue limit load	Limiting speed	Reference speed
D_1	E	dyn. C_r	stat. C_{0r}	C_{ur}	n_G	n_B
≈		kN	kN	kN	min^{-1}	min^{-1}
464,5	475,5	660	1 340	130	720	470
496,1	510,85	1 710	3 500	350	690	350
535,1	558,52	3 050	5 400	500	650	345
489,5	500	680	1 420	135	690	430
509	522,95	1 730	3 600	355	670	340
506	517	700	1 470	139	660	415
544,6	562	2 090	4 100	405	630	325
541	554	940	1 890	179	620	385
559,6	576,3	2 130	4 250	410	610	310
561	474,5	960	1 970	185	600	365
596,6	614,75	2 390	4 800	460	570	280
581,5	594,5	980	2 050	190	580	345
612,7	630	2 430	4 950	470	560	270

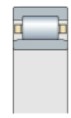

Double row full complement cylindrical roller bearings

Semi-locating, locating and non-locating bearings

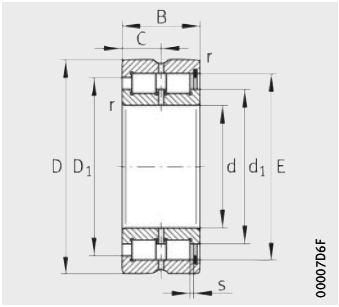

SL1850
Semi-locating bearings

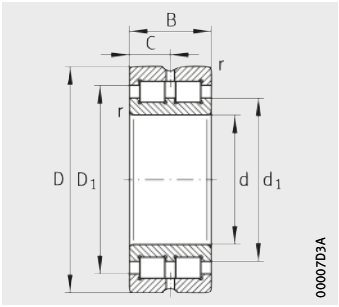

SL0148, SL0149
Locating bearings

Dimension table · Dimensions in mm

Semi-locating bearings Designation	Locating bearings Designation	Non-locating bearings Designation	Designation to DIN 5412	Mass	Dimensions				
				m	d	D	B	r	s
				≈kg				min.	
SL185044	–	–	–	51,6	**220**	340	160	3	9
–	**SL014948**	–	NNC 4948 V	18,5	**240**	320	80	2,1	–
–	–	**SL024948**	NNCL 4948 V	17,9	**240**	320	80	2,1	5
SL185048	–	–	–	55,2	**240**	360	160	3	9
–	**SL014852**	–	NNC 4852 V	11	**260**	320	60	2	–
–	–	**SL024852**	NNCL 4852 V	10,6	**260**	320	60	2	4
–	**SL014952**	–	NNC 4952 V	32	**260**	360	100	2,1	–
–	–	**SL024952**	NNCL 4952 V	31,2	**260**	360	100	2,1	6
SL185052	–	–	–	82,6	**260**	400	190	4	11,3
–	**SL014856**	–	NNC 4856 V	16	**280**	350	69	2	–
–	–	**SL024856**	NNCL 4856 V	15,6	**280**	350	69	2	4
–	**SL014956**	–	NNC 4956 V	34	**280**	380	100	2,1	–
–	–	**SL024956**	NNCL 4956 V	33,1	**280**	380	100	2,1	6
SL185056	–	–	–	88	**280**	420	190	4	11,3
–	**SL014860**	–	NNC 4860 V	23	**300**	380	80	2,1	–
–	–	**SL024860**	NNCL 4860 V	22	**300**	380	80	2,1	6
–	**SL014960**	–	NNC 4960 V	53	**300**	420	118	3	–
–	–	**SL024960**	NNCL 4960 V	51,9	**300**	420	118	3	6
SL185060-TB	–	–	–	124	**300**	460	218	4	12,5
–	**SL014864**	–	NNC 4864 V	24	**320**	400	80	2,1	–
–	–	**SL024864**	NNCL 4864 V	23,5	**320**	400	80	2,1	6
–	**SL014964**	–	NNC 4964 V	56	**320**	440	118	3	–
–	–	**SL024964**	NNCL 4964 V	54,9	**320**	440	118	3	6
SL185064-TB	–	–	–	128,4	**320**	480	218	4	12,5
–	**SL014868**	–	NNC 4868 V	25,5	**340**	420	80	2,1	–
–	–	**SL024868**	NNCL 4868 V	25	**340**	420	80	2,1	6
–	**SL014968**	–	NNC 4968 V	59	**340**	460	118	3	–
–	–	**SL024968**	NNCL 4968 V	57,8	**340**	460	118	3	6
SL185068-TB	–	–	–	178	**340**	520	243	5	14,3
–	**SL014872**	–	NNC 4872 V	27	**360**	440	80	2,1	–
–	–	**SL024872**	NNCL 4872 V	26	**360**	440	80	2,1	6
–	**SL014972**	–	NNC 4972 V	62,1	**360**	480	118	3	–
–	–	**SL024972**	NNCL 4972 V	60,8	**360**	480	118	3	6
SL185072-TB	–	–	–	178	**360**	540	243	5	14

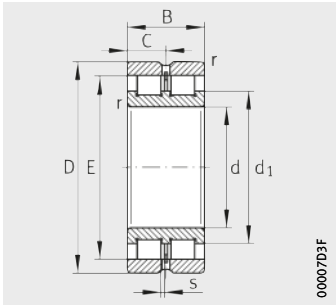

SL0248, SL0249
Non-locating bearings

				Basic load ratings		Fatigue limit load	Limiting speed	Reference speed
C	d_1	D_1	E	dyn. C_r	stat. C_{0r}	C_{ur}	n_G	n_B
	≈	≈		kN	kN	kN	min^{-1}	min^{-1}
80	254,6	297,8	312,2	1 980	3 650	420	1 170	630
40	270,6	292,3	–	740	1 700	186	1 150	660
40	270,6	–	299,46	740	1 700	186	1 150	660
80	277,5	322,1	335,1	2 080	4 000	445	1 080	550
30	281,8	298,8	–	540	1 370	143	1 120	650
30	281,8	–	304,2	540	1 370	143	1 120	650
50	294,5	322,1	–	1 100	2 470	270	1 050	570
50	294,5	–	331,33	1 100	2 470	270	1 050	570
95	304	359,7	375,97	2 750	5 000	560	980	490
34,5	306,8	326,4	–	700	1 820	189	1 020	570
34,5	306,8	–	332,4	700	1 820	189	1 020	570
50	316,5	344,6	–	1 150	2 650	285	980	520
50	316,5	–	353,34	1 150	2 650	285	980	520
95	318,3	374,1	390,3	2 850	5 300	580	940	460
40	327,9	349,9	–	820	2 070	214	960	550
40	327,9	–	356,7	820	2 070	214	960	550
59	340,7	374,3	–	1 630	3 700	390	910	445
59	340,7	–	385,51	1 630	3 700	390	910	445
109	353,6	413,6	433,6	3 450	6 600	650	840	395
40	350,9	372,9	–	850	2 220	225	900	495
40	350,9	–	379,7	850	2 220	225	900	495
59	367,5	401,1	–	1 700	4 050	415	840	395
59	367,5	–	412,27	1 700	4 050	415	840	395
109	369,5	431,5	449,5	3 550	6 900	680	810	375
40	368,1	390,1	–	870	2 330	233	860	465
40	368,1	–	396,9	870	2 330	233	860	465
59	385,3	418,9	–	1 750	4 250	430	810	375
59	385,3	–	430,11	1 750	4 250	430	810	375
121,5	396	465,5	485,65	4 250	8 300	800	750	355
40	391	413,2	–	900	2 480	244	810	430
40	391	–	419,8	900	2 480	244	810	430
59	404	436,8	–	1 790	4 450	445	770	350
59	404	–	447,95	1 790	4 450	445	770	350
121,5	413,8	481	503,45	4 400	8 700	820	720	320

Double row full complement cylindrical roller bearings

Full complement, double row
Semi-locating, locating and non-locating bearings

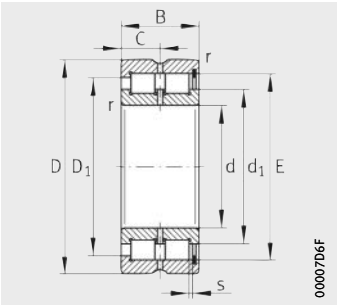

SL1850
Semi-locating bearings

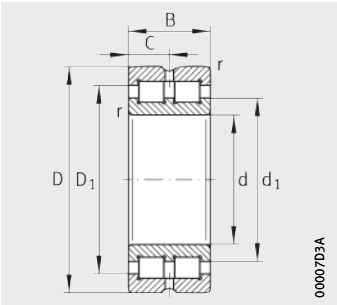

SL0148, SL0149
Locating bearings

Dimension table (continued) · Dimensions in mm

Semi-locating bearings Designation	Locating bearings Designation	Non-locating bearings Designation	Designation to DIN 5412	Mass	Dimensions				
				m	d	D	B	r	s
				≈kg				min.	
–	**SL014876**	–	NNC 4876 V	45,5	**380**	480	100	2,1	–
–	–	**SL024876**	NNCL 4876 V	44	**380**	480	100	2,1	6
–	**SL014976**	–	NNC 4976 V	92,4	**380**	520	140	4	–
–	–	**SL024976**	NNCL 4976 V	90,5	**380**	520	140	4	7
SL185076-TB	–	–	–	196,5	**380**	560	243	5	14,1
–	**SL014880**	–	NNC 4880 V	46,5	**400**	500	100	2,1	–
–	–	**SL024880**	NNCL 4880 V	45,8	**400**	500	100	2,1	6
–	**SL014980**	–	NNC 4980 V	96,5	**400**	540	140	4	–
–	–	**SL024980**	NNCL 4980 V	94,6	**400**	540	140	4	7

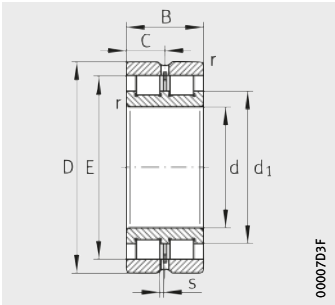

SL0248, SL0249
Non-locating bearings

				Basic load ratings		Fatigue limit load	Limiting speed	Reference speed
C	d_1	D_1	E	dyn. C_r	stat. C_{0r}	C_{ur}	n_G	n_B
	≈	≈		kN	kN	kN	min^{-1}	min^{-1}
50	419	447,2	–	1 320	3 500	345	750	375
50	419	–	455,8	1 320	3 500	345	750	375
70	430,2	468,7	–	2 250	5 500	560	720	325
70	430,2	–	481,35	2 250	5 500	560	720	325
121,5	432	499	521,25	4 450	8 900	850	700	305
50	433,8	462	–	1 350	3 650	355	720	360
50	433,8	–	470,59	1 350	3 650	355	720	360
70	450,5	489	–	2 310	5 800	580	690	300
70	450,5	–	501,74	2 310	5 800	580	690	300

Cable sheave bearings

Cylindrical roller bearings
with annular slots
Full complement, sealed
Locating bearings

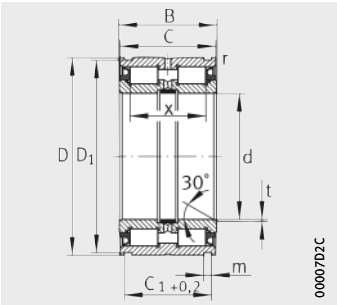

SL0450..-PP
SL04..-PP

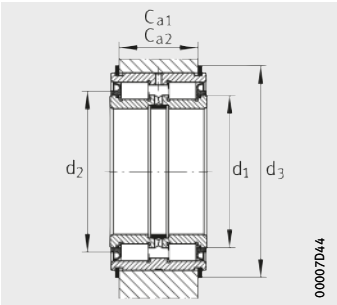

Mounting dimensions

Dimension table · Dimensions in mm

Designation	Mass	Dimensions									
	m	d	D	B	C	C_1	D_1	m	r	t	x
	≈kg					+0,2			min.		
SL045044-PP	52,5	**220**	340	160	159	138,2	334	6,3	1	2	132
SL045048-PP	56	**240**	360	160	159	138,2	354	6,3	1	2	132
SL04240-PP	21	**240**	320	95	94	83,2	314	6,3	1	2	72
SL045052-PP	84,5	**260**	400	190	189	162,2	394	6,3	1,1	3	150
SL04260-PP	22,5	**260**	340	95	94	83,2	334	6,3	1	3	75
SL045056-PP	90	**280**	420	190	189	163,2	413	7,3	1,1	3	150
SL045060-PP	126	**300**	460	218	216	185,2	453	7,3	1,1	3	170
SL04300-PP	25,5	**300**	380	95	94	83,2	374	6,3	1	3	75

1) For snap rings WRE.

2) For retaining ring to DIN 471.

Mounting dimensions					Basic load ratings		Fatigue limit load	Limiting speed	Snap ring WRE	Retaining ring to DIN 471
C_{a1} [1] −0,2	C_{a2} [2] −0,2	d_1	d_2	d_3 [1]	dyn. C_r kN	stat. C_{0r} kN	C_{ur} kN	n_G grease min^{-1}		
130	126	259,85	286	366	1 570	3 050	350	480	WRE340	340X6
130	126	279,25	305	386	1 630	3 300	370	440	WRE360	360X6
75	71	271,7	287	346	740	1 700	186	480	WRE320	320X6
154	150	304,95	336	426	2 380	4 700	520	400	WRE400	400X6
75	71	292,7	310	366	840	1 990	215	440	WRE340	340X6
154	149	320,95	354	453	2 600	5 200	570	380	WRE420	420X7
176	171	346,85	375	493	3 000	5 800	620	340	WRE460	460X7
75	71	328	346	406	900	2 250	234	380	WRE380	380X6

FAG

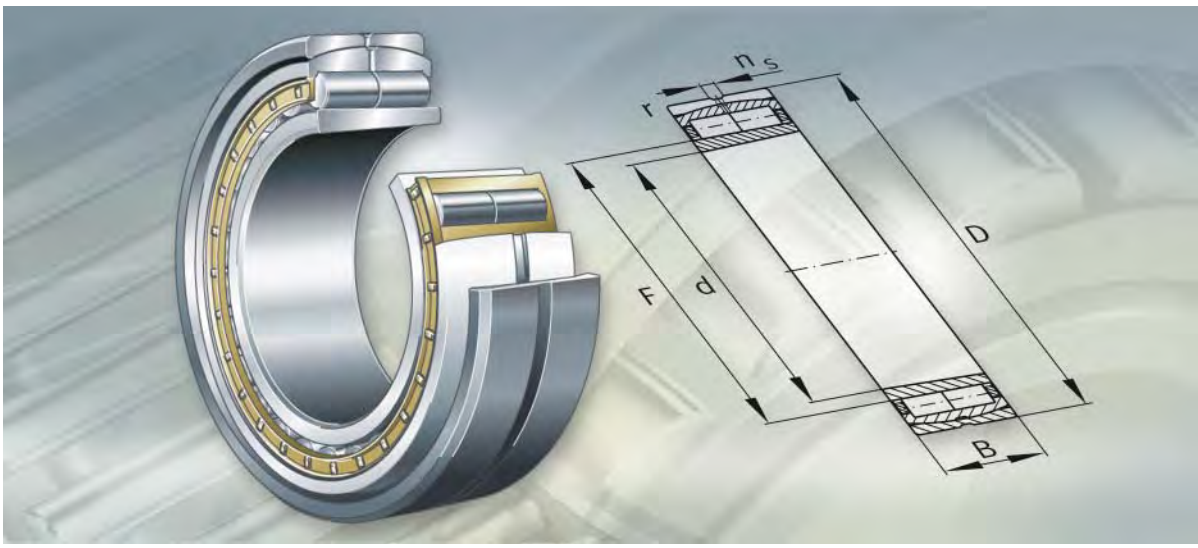

Self-aligning cylindrical roller bearings

Self-aligning cylindrical roller bearings

		Page
Product overview	Self-aligning cylindrical roller bearings	466
Features	Bearings with tapered bore	467
	Non-locating bearings	467
	Axial displacement	467
	Sealing	467
	Lubrication	467
	Operating temperature and material	468
	Cages	468
	Suffixes	468
Design and safety guidelines	Permissible skewing	469
	Equivalent dynamic bearing load	469
	Equivalent static bearing load	469
	Minimum radial load	469
	Design of bearing arrangements	469
Accuracy	Radial internal clearance	470
Dimension tables	Cylindrical roller bearings, self-aligning, double row, with tapered bore	472



Non-locating bearings

With tapered bore

Z-5..ZL2-02, F-8..ZL2-02

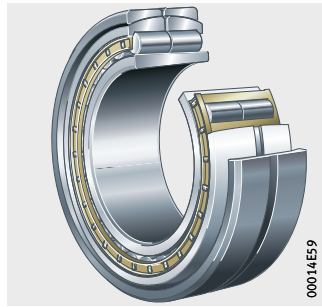

Self-aligning cylindrical roller bearings

Features

These double row cylindrical roller bearings comprise solid bearing rings and cylindrical roller and cage assemblies with solid cages. The bearings have outer rings with two rigid ribs and ribless inner rings. The spherical outer ring is seated in a plain bearing pivot ring and can compensate misalignment of the bearing seats as well as deflections. The ribless inner ring allows constraint-free axial displacement in the bearing. The very high radial load carrying capacity of the cylindrical roller bearing is maintained in full even under large displacements.

The external dimensions of the complete bearing with the pivot ring correspond to the main dimensions of dimension series 30, 22 and 31 to DIN 616.
These bearings are used as non-locating bearings on the tending side of the dryer roll in paper machinery. They are mounted in normal paper machinery housings.

The same design is used in cylindrical roller bearings with main dimensions of dimension series 22, 23 and 32 that are intended for guide rolls.

Bearings with tapered bore

Self-aligning double row cylindrical roller bearings with a tapered bore (taper 1:12) are directly located on tapered journals.
The radial internal clearance can thus be set to an optimum value.

Non-locating bearings

All self-aligning double row cylindrical roller bearings are non-locating bearings and can support radial forces only.
The changes in length of the heated dryer roll are made possible without constraint in the cylindrical roller bearing between the raceway of the inner ring and the rolling elements.
Axial forces are supported on the drive side of the dryer roll by spherical roller bearings.

Axial displacement

The outer and inner ring can be axially displaced relative to each other from the central position by the values “s” stated in the dimension tables.



Sealing

The bearings are supplied without seals.

Lubrication

The plain bearing pivot ring and the bearing outer ring each have a lubrication groove and lubrication holes for the best possible supply of lubricant directly into the interior of the bearing.
Due to the central position of the feed, oil outlet of a high quality oil corresponding to ISO-VG 220 or 320 is possible on both sides of the bearing.

Operating temperature and material

The ambient temperature for bearings in the dry section of paper machinery may be more than +100 °C on a continuous basis. By means of bainitic hardening, the rings of the double row cylindrical roller bearings are dimensionally stabilised up to +200 °C. Connection to a central recirculating oil lubrication system allows heat to be continuously dissipated from the bearing. For dryer rolls and M.G. cylinders with steam heating, case hardened inner rings are recommended and these are indicated by the suffix W209B.

Cages

Self-aligning double row cylindrical roller bearings have a solid brass cage that encloses both rows of rollers.

Suffixes

Suffixes for available designs: see table.

Available designs

Suffix	Description	Design
C3	Radial internal clearance larger than normal	Standard
C5	Radial internal clearance larger than C4	
K	Tapered bore (taper 1:12)	

Design and safety guidelines

Permissible skewing

The permissible misalignment between the plain bearing pivot ring and the bearing is 2°.
The pivot ring has a Durotect®-Z (zinc phosphate) coating and the concave surface has a molybdenum disulphide coating.
The alignment movement in operation is additionally supported by the steady feed of lubricant.

Equivalent dynamic bearing load

For bearings under dynamic loading, the following applies:

$$P = F_r$$

P kN
Equivalent dynamic bearing load
F_r kN
Radial dynamic bearing load.

Equivalent static bearing load

For bearings under static loading, the following applies:

$$P_0 = F_{0r}$$

P_0 kN
Equivalent static bearing load
F_{0r} kN
Radial static bearing load.

Minimum radial load

In continuous operation, a minimum radial load of the order of $F_{r\,min} = C_{0r}/60$ is necessary.

If $F_{r\,min} < C_{0r}/60$, please contact us.

Design of bearing arrangements

Mounting dimensions

The dimension tables give the maximum dimension of the radius r_a and the diameters of the abutment shoulders D_a, d_a.



Accuracy

The dimensional and running tolerances of the bearings correspond to tolerance class PN to DIN 620.

Radial internal clearance

Due to the high operating temperatures and the associated large temperature differential between the inner and outer ring, the bearings for dryer rolls and M.G. cylinders are supplied with the increased radial internal clearance C5. Bearings for guide rolls have the increased radial internal clearance C3.

Radial internal clearance of cylindrical roller bearings with tapered bore

Bore d mm		Radial internal clearance							
		CN µm		C3 µm		C4 µm		C5 µm	
over	incl.	min.	max.	min.	max.	min.	max.	min.	max.
180	200	140	195	180	235	220	275	275	330
200	225	155	215	200	260	245	305	305	365
225	250	170	235	220	285	270	335	335	400
250	280	185	255	240	310	295	365	365	435
280	315	205	280	265	340	325	400	400	475
315	355	225	305	290	370	355	435	435	515
355	400	255	345	330	420	405	495	495	585
400	450	285	385	370	470	455	555	555	655
450	500	315	425	410	520	505	615	615	725
500	560	350	470	455	575	560	680	680	800
560	630	380	500	500	620	620	740	740	860
630	710	435	575	565	705	695	835	835	975



Self-aligning cylindrical roller bearings

Double row,
with tapered bore (taper 1:12)

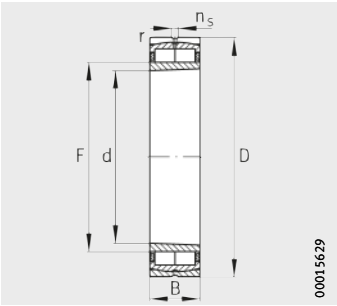

Dimension table · Dimensions in mm

Designation	Mass	Dimensions						
	m	d	D	B	r	s[1)]	F	n_s
	≈kg				min.			
F-804272.ZL-K-C3	44,3	**150**	320	108	3	13	184	17,7
Z-548428.ZL-K-C3	53,9	**160**	340	114	4	13	196	17,7
Z-567601.ZL-K-C3	31,7	**180**	320	86	4	7,5	211	17,7
Z-567601.ZL-K-C5	31,7	**180**	320	86	4	7,5	211	17,7
F-803792.ZL-K-C3	40,5	**180**	320	112	4	12,5	211	15
Z-580454.ZL-K-C5	36	**190**	320	104	3	10,5	222	15
Z-566170.ZL-K-C3	38,5	**190**	340	92	4	8,5	223	17,7
Z-566170.ZL-K-C5	38,5	**190**	340	92	4	8,5	223	17,7
Z-566487.ZL-K-C5	44,6	**200**	340	112	3	9,5	233	17,7
F-804462.ZL-K-C3	60	**200**	360	128	4	12,5	234	17,7
Z-565531.ZL-K-C5	31,5	**220**	340	90	3	7,5	246	15
Z-565688.ZL-K-C5	55,5	**220**	370	120	4	8,5	256	17,7
Z-567498.ZL-K-C3	63,5	**220**	400	108	4	10,5	258	17,7
Z-567498.ZL-K-C5	63,5	**220**	400	108	4	10,5	258	17,7
F-804463.ZL-K-C3	86,7	**220**	400	144	4	10,5	260	17,7
Z-565668.ZL-K-C5	34,6	**240**	360	92	3	8	269	15
Z-566484.ZL-K-C5	68	**240**	400	128	4	12	278	17,7
F-804464.ZL-K-C3	115	**240**	440	160	4	13	285	23,5
Z-565499.ZL-K-C5	49,7	**260**	400	104	4	10	292	17,7
Z-566488.ZL-K-C5	93,6	**260**	440	144	4	16	301	17,7
Z-565669.ZL-K-C5	58,8	**280**	420	106	4	11	313	17,7
Z-566489.ZL-K-C5	102	**280**	460	146	5	16	324	17,7
Z-565670.ZL-K-C5	75,2	**300**	460	118	4	9,5	330	17,7
Z-566490.ZL-K-C5	133	**300**	500	160	5	17,5	348	17,7
Z-565671.ZL-K-C5	81,5	**320**	480	121	4	11	357	17,7
Z-566491.ZL-K-C5	174	**320**	540	176	5	20,5	369	23,5
Z-565672.ZL-K-C5	109	**340**	520	133	5	14	381	23,5
Z-566492.ZL-K-C5	221	**340**	580	190	5	17,5	390	23,5

Bearings with case hardened inner rings have the suffix W209B.

Ordering example: Z-566490.ZL-K-W209B-C5.

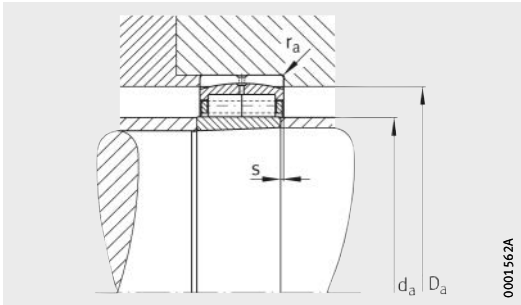

1) Axial displacement “s”

Mounting dimensions			Basic load ratings		Fatigue limit load	Limiting speed
d_a	D_a	r_a	dyn. C_r	stat. C_{0r}	C_{ur}	n_G
max.	max.	max.	kN	kN	kN	min^{-1}
182,5	303	2,5	1 110	1 600	177	2 800
194,4	323	3	1 240	1 870	206	2 600
209,2	303	3	910	1 530	167	2 600
209,2	303	3	910	1 530	167	2 600
209,2	303	3	1 040	1 830	204	2 600
213,1	306	2,5	950	1 860	212	2 400
221,1	323	3	1 020	1 740	187	2 400
221,1	323	3	1 020	1 740	187	2 400
231	326	2,5	1 150	2 250	247	2 200
232	343	3	1 380	2 600	285	2 200
243,8	327,6	2,5	920	1 900	206	2 200
253,8	353	3	1 320	2 750	295	2 000
255,8	383	3	1 440	2 350	242	1 900
255,8	383	3	1 440	2 350	242	1 900
257,8	383	3	1 860	3 500	370	1 900
266,6	347,6	2,5	950	2 100	222	1 900
275,6	383	3	1 490	3 000	315	1 800
282,6	423	3	2 160	4 200	440	1 800
289,4	385,4	3	1 200	2 550	260	1 800
298,4	423	3	1 790	3 600	370	1 700
310,2	405,4	3	1 170	2 650	270	1 700
321,2	440	4	1 830	3 950	405	1 600
327	445,4	3	1 580	3 450	345	1 600
345	480	4	2 170	4 650	460	1 600
353,8	465,4	3	1 640	3 700	360	1 500
365,8	520	4	2 650	5 400	520	1 500
377,6	502	4	1 940	4 150	395	1 500
386,6	560	4	3 250	6 700	640	1 400

Self-aligning cylindrical roller bearings

Double row,
with tapered bore (taper 1:12)

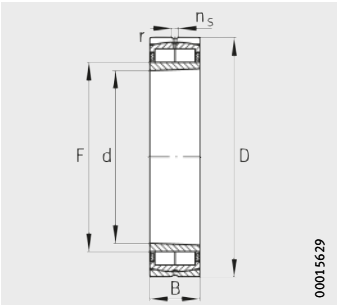

Dimension table (continued) · Dimensions in mm

Designation	Mass	Dimensions						
	m	d	D	B	r	$s^{1)}$	F	n_s
	≈kg				min.			
Z-565673.ZL-K-C5	114	**360**	540	134	5	10,5	403	23,5
F-800479.ZL-K-C5	219	**360**	600	192	5	19	425	23,5
Z-565674.ZL-K-C5	121	**380**	560	135	5	10	419	23,5
F-800480.ZL-K-C5	241	**380**	620	194	5	20,5	440	23,5
Z-565675.ZL-K-C5	159	**400**	600	148	5	11,5	449	23,5
Z-565874.ZL-K-C5	140	**400**	650	200	6	17,5	450	23,5
Z-565676.ZL-K-C5	164	**420**	620	150	5	12	469	23,5
Z-572777.ZL-K-C5	363	**420**	700	224	6	19	475	23,5
Z-565677.ZL-K-C5	188	**440**	650	157	6	15,5	488	23,5
F-800481.ZL-K-C5	378	**440**	720	226	6	25	492	23,5
Z-565678.ZL-K-C5	214	**460**	680	163	6	13,5	514	23,5
F-800482.ZL-K-C5	472	**460**	760	240	7,5	22	528	23,5
Z-565679.ZL-K-C5	225	**480**	700	165	6	13,5	532	23,5
F-800483.ZL-K-C5	507	**480**	790	248	7,5	27	544	23,5
Z-565680.ZL-K-C5	234	**500**	720	167	6	14,5	553	23,5
F-800484.ZL-K-C5	621	**500**	830	264	7,5	28	568	23,5
Z-565681.ZL-K-C5	322	**530**	780	185	6	14,5	592	23,5
Z-574099.ZL-K-C5	671	**530**	870	272	7,5	22	609	23,5
Z-565682.ZL-K-C5	365	**560**	820	195	6	15,5	618	23,5
F-800485.ZL-K-C5	771	**560**	920	280	7,5	28	630	23,5
Z-572367.ZL-K-C5	422	**600**	870	200	6	16	665	23,5
Z-573929.ZL-K-C5	962	**600**	980	300	7,5	26	678	23,5
Z-565684.ZL-K-C5	499	**630**	920	212	7,5	17	700	23,5
F-800592.ZL-K-C5	1 110	**630**	1 030	315	7,5	33,5	716	23,5
Z-565685.ZL-K-C5	627	**670**	980	230	7,5	21	738	23,5
F-800593.ZL-K-C5	1 280	**670**	1 090	336	7,5	34	755	23,5
Z-565686.ZL-K-C5	695	**710**	1 030	236	7,5	21	778	23,5
F-800594.ZL-K-C5	1 430	**710**	1 150	345	7,5	38,5	795	23,5

Bearings with case hardened inner rings have the suffix W209B.

Ordering example: F-800484.ZL-K-W209B-C5.

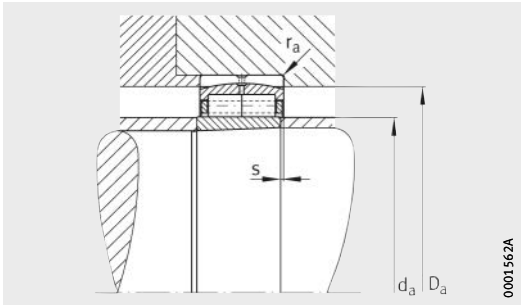

[1] Axial displacement “s”

Mounting dimensions			Basic load ratings		Fatigue limit load	Limiting speed
d_a	D_a	r_a	dyn. C_r	stat. C_{0r}	C_{ur}	n_G
max.	max.	max.	kN	kN	kN	min^{-1}
399,4	522	4	2 070	4 750	450	1 400
421,4	580	4	3 200	6 700	630	1 300
415,2	542	4	2 080	5 000	480	1 300
436,2	600	4	3 300	7 300	670	1 200
445	582	4	2 600	6 100	560	1 200
446	624	5	3 550	7 800	730	1 200
464,8	602	4	2 550	6 300	580	1 200
470,8	674	5	4 500	9 600	870	1 000
483,6	627	5	2 750	6 600	590	1 100
487,6	694	5	4 450	9 400	850	1 000
509,4	657	5	3 050	7 600	680	1 000
523,4	728	6	5 300	11 500	1 000	950
527,2	677	5	3 100	7 800	700	950
539,2	758	6	5 300	11 200	970	900
548	697	5	3 150	8 100	710	950
563	798	6	6 000	12 800	1 090	850
586,7	757	5	3 900	9 900	850	850
603,7	838	6	6 800	15 500	1 300	800
612,4	797	5	4 350	10 900	930	850
624,4	888	6	7 100	15 400	1 260	750
659	847	5	4 400	12 100	1 010	750
672	948	6	8 200	18 800	1 520	700
693,7	892	6	5 200	13 600	1 130	700
709,7	998	6	9 000	20 000	1 600	670
731,3	952	6	5 700	15 000	1 220	670
748,3	1 058	6	10 200	23 000	1 810	630
770,9	1 002	6	6 500	16 500	1 290	630
787,9	1 110	6	10 800	24 200	1 850	600

FAG

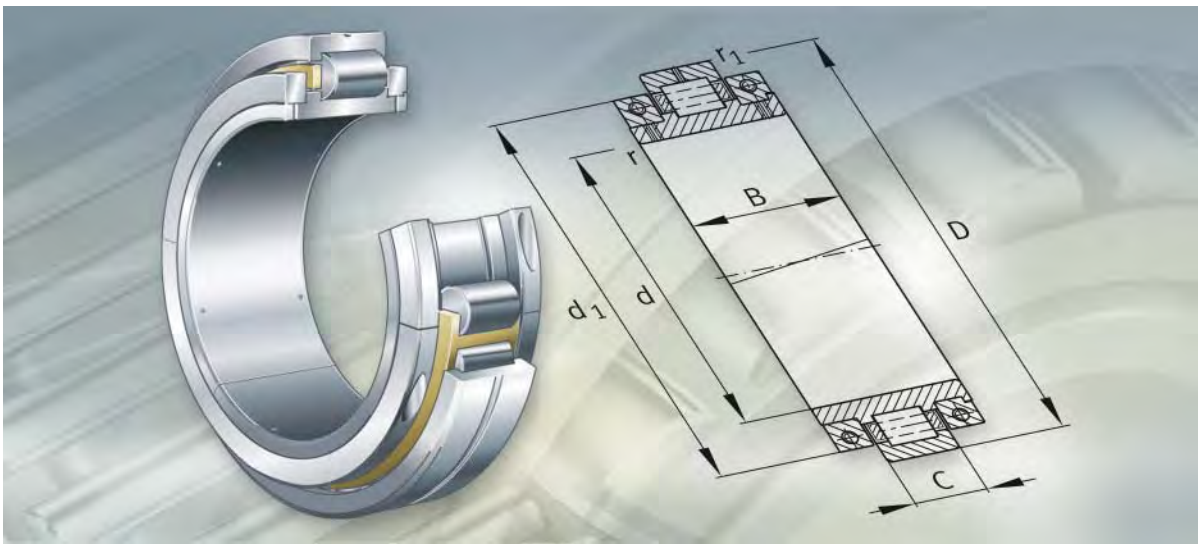

Split cylindrical roller bearings

Split cylindrical roller bearings

		Page
Product overview	Split cylindrical roller bearings	478
Features	Sealing	479
	Lubrication	479
	Non-locating bearings	479
	Semi-locating bearings	480
	Locating bearings	481
	Operating temperature	482
	Cages	482
	Suffixes	482
Design and safety guidelines	Load limit	483
	Axial load carrying capacity	483
	Equivalent dynamic bearing load	483
	Equivalent static bearing load	483
	Minimum radial load	483
	Design of bearing arrangements	483
Accuracy	Radial internal clearance	484
Dimension tables	Cylindrical roller bearings, split, single and double row, semi-locating, locating and non-locating bearings	486



Non-locating bearings

Single row

Z-5..ZL1-05, F-8..ZL1-05

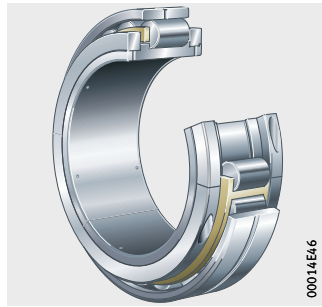

Semi-locating bearings

Single row

Z-5..ZL1-06

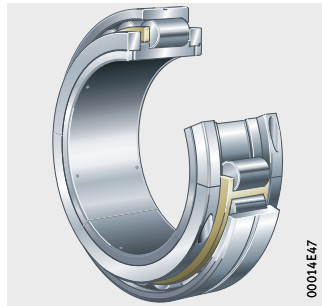

Locating bearings

Single row

Z-5..ZL1-07, F-8..ZL1-07

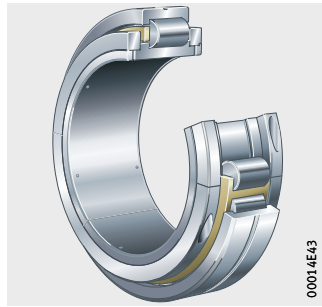

Double row

Z-5..ZL2-03, F-8..ZL2-03

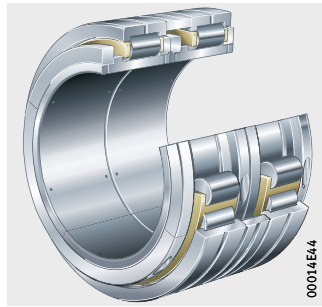

Split cylindrical roller bearings

Features

Split cylindrical roller bearings are generally single row bearings with a cylindrical bore. These bearings comprise two inner ring and two outer ring halves and a split cage with cylindrical rollers.

The outer rings have no rigid ribs, *Figure 1*,
one rigid rib, *Figure 2*, page 480,
or two rigid ribs, *Figure 3*, page 481.

Only the locating bearings of Design 8 have two rows of rollers, *Figure 4*, page 481.

The inner rings are located on the shaft by means of loose, split locking collars. The rings are split obliquely to the bearing axis in order to ensure that the rolling elements pass over the joints without shocks. The bearing dimensions and designations are not standardised.

Sealing

The split cylindrical roller bearings are supplied without seals.

Lubrication

Most bearings can be lubricated via the outer ring or the outer intermediate ring. We recommend grease lubrication due to the simple sealing arrangement and ease of relubrication.

Non-locating bearings

Non-locating bearings support radial forces only.

Design 1

- Ribless outer ring, inner ring with two rigid ribs, solid cage, relubrication facility via the outer ring
- Application:
  – for example in air prewarmers, converter drives, drive spindles in rolling mills, bucket wheel excavators.

Design 2

- Ribless outer ring, inner ring with two rigid ribs, pin cage, relubrication facility via the outer ring
- Application:
  – for example in converter drives, bucket wheel excavators.

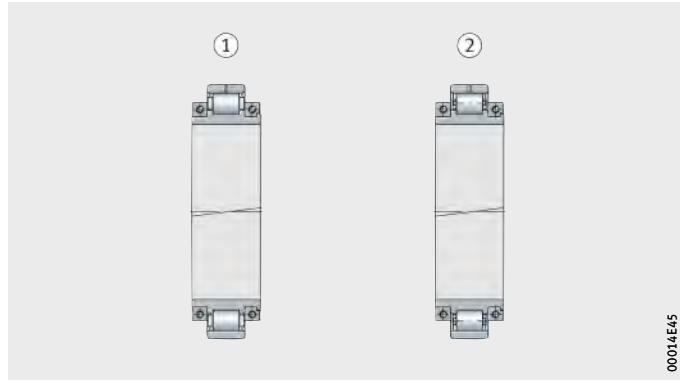

① Design 1
② Design 2

Figure 1
Split cylindrical roller bearings, single row non-locating bearings

Semi-locating bearings

In addition to high radial forces, these bearings can also support axial forces in one direction.
They act as non-locating bearings in the opposite direction.

Design 3

- Outer ring with one rigid rib, inner ring with two rigid ribs, solid cage
- Application:
  - for example in air prewarmers, converter drives, drive spindles in rolling mills, bucket wheel excavators.

Design 4

- Outer ring with one rigid rib, inner ring with one rigid rib, solid cage, relubrication facility via the outer ring
- Application:
  - for example in air prewarmers, converter drives, drive spindles in rolling mills, bucket wheel excavators.

Design 5

- Outer ring with one rigid rib, inner ring with one rigid rib, pin cage
- Application:
  - for example in converter drives, bucket wheel excavators.

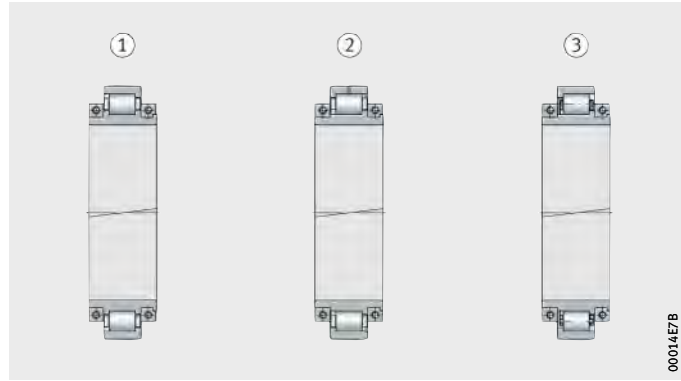

① Design 3
② Design 4
③ Design 5

Figure 2
Split cylindrical roller bearings, single row semi-locating bearings

Locating bearings

In addition to high radial forces, locating bearings can also support axial forces in both directions.

Single row locating bearings

Design 6

- Outer ring with two rigid ribs, inner ring with two rigid ribs, solid cage
- Application:
  – for example in air prewarmers, converter drives, drive spindles in rolling mills, bucket wheel excavators.

Design 7

- Outer ring with two rigid ribs, inner ring with two rigid ribs, pin cage, relubrication facility via the outer ring
- Application:
  – for example in converter drives, bucket wheel excavators.

Double row locating bearings

Design 8

- Double row bearing (two matched single row bearings), specially for drive spindles in rolling mills
- Relubrication facility via the outer intermediate ring.

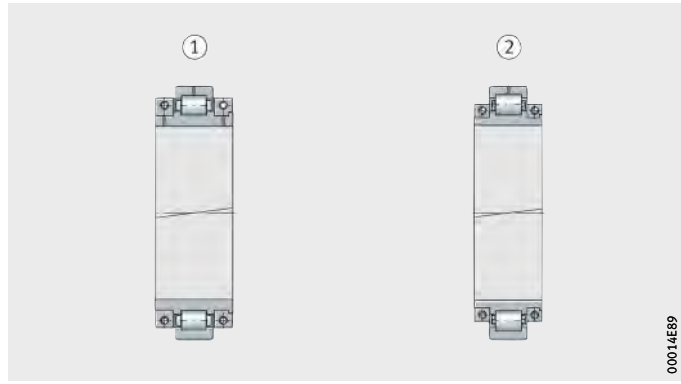

① Design 6
② Design 7

Figure 3
Split cylindrical roller bearings, single row locating bearings

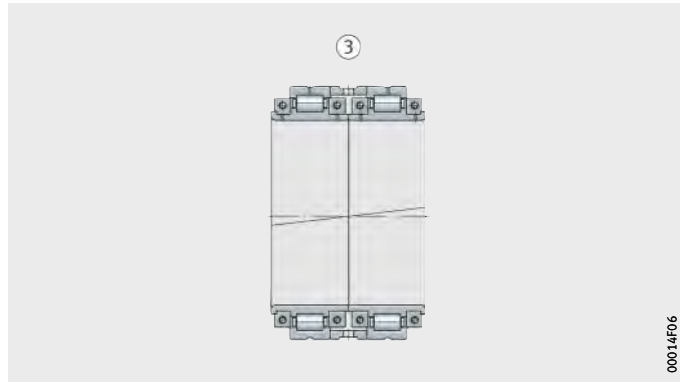

① Design 8

Figure 4
Split cylindrical roller bearings, double row locating bearings

Split cylindrical roller bearings

Operating temperature

Split cylindrical roller bearings can be used at operating temperatures from –30 °C to +150 °C.

Cages

The bearings of most designs are fitted with a split solid cage made from brass or steel.

Bearings of Designs 2, 5 and 7 have a split pin cage made from steel. This offers very high load carrying capacity and is also suitable for strong accelerations and decelerations.

Suffixes

The design of the split cylindrical roller bearings (for example radial internal clearance, accuracy, cage) is specified in the designation (Z-5..ZL or F-8..ZL).

Please contact us for further information on the bearing design.

Design and safety guidelines

Load limit

The loading of split bearings must be restricted.

The load limit $P/C_r \leqq 0{,}2$ must be observed.

P kN
Equivalent dynamic bearing load

C_r kN
Basic dynamic load rating.

Axial load carrying capacity

Based on experience, the permissible axial force F_a of semi-locating and locating bearings is 10% to 20% of the radial force F_r.
If higher axial forces are expected, our advisory service should be contacted for assistance.

Equivalent dynamic bearing load

For bearings under dynamic loading, the following applies:

$$P = f_s \cdot F_r$$

P kN
Equivalent dynamic bearing load

$f_s = 1{,}1$ –
Shock factor

F_r kN
Radial dynamic bearing load.

Semi-locating and locating bearings

If an axial force F_a is present in addition to the radial force F_r, the effect on the rating life must be calculated using our calculation program BEARINX®.

Equivalent static bearing load

For bearings under static loading, the following applies:

$$P_0 = F_{0r}$$

P_0 kN
Equivalent static bearing load

F_{0r} kN
Radial static bearing load.

Minimum radial load

In continuous operation, a minimum radial load of the order of $F_{r\,min} = C_{0r}/60$ is necessary.

If $F_{r\,min} < C_{0r}/60$, please contact us.

Design of bearing arrangements

The shaft diameter and the bearing bore should match as precisely as possible. It is recommended that the shaft is machined to g6 or h6. Once the screws in the locking collars have been tightened, there is a gap at the parting lines of 0,3 mm to 0,4 mm. This gives a tight fit of the bearing inner ring.

The housing bore should be machined to H6 or H7.

Split cylindrical roller bearings

Accuracy

The dimensional and running accuracy of the split cylindrical roller bearings of the basic design correspond to tolerance class PN to DIN 620.

Radial internal clearance

In most cases, split cylindrical roller bearings have a radial internal clearance to internal clearance group CN.
Please contact us for further information on the radial internal clearance.



Split cylindrical roller bearings

Single and double row
Non-locating, semi-locating and locating bearings

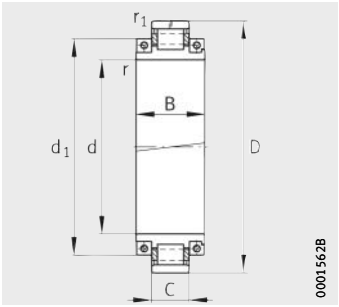

Design 1
Non-locating bearing

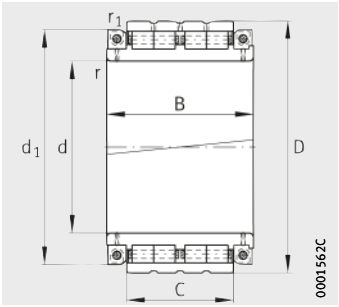

Design 1
Non-locating bearing, four-row

Dimension table · Dimensions in mm

Designation	Design	Mass	Dimensions			
		m	d	D	B	C
		≈kg				
Z-533705.ZL	6	111	**279,4**	430	203,35	110
F-804807.ZL	6[1]	131	**300**	558,8	220	139,7
Z-521220.ZL	1	50,9	**304,8**	438,15	142,875	74,613
Z-541234.ZL	8	111	**350**	470	240	170
Z-528438.ZL	1	73,5	**355,6**	488,95	146,05	74,613
Z-549659.ZL	6	18,7	**360**	440	80	38
Z-577892.ZL	8	89,5	**360**	460	225	164
Z-561001.ZL	1	115	**400**	600	160	90
Z-577677.ZL	8	289	**400**	600	328	244
Z-581006.ZL	8	334	**400**	600	420	200
Z-572885.ZL	1	190	**400**	615,95	200	115,9
Z-572886.ZL	1	194	**400**	615,95	200	115,9
Z-543717.ZL	1	73,3	**406,4**	546,1	161	76,2
Z-579574.ZL	6	224	**440**	666,75	200	115,9
Z-538563.ZL	1[2]	213	**450**	600	275	200
F-807475.ZL	6	88,6	**480**	600	160	75
F-804678.ZL	6	109	**500**	635	155	73
Z-577893.ZL	8	234	**500**	635	310	228
Z-545148.ZL	8	337	**500**	680	332	220
Z-546551.ZL	6	760	**500**	850,9	360	210
Z-543852.ZL	1	117	**533,4**	692,15	187	81
Z-548795.ZL	8	239	**553**	700	260	184
Z-563458.ZL	8	255	**553**	710	260	184
Z-580869.ZL	6	95,8	**560**	680	142	72
F-807125.ZL	8	456	**560**	730	460	350
F-804627.ZL	6	218	**580**	750	257,5	85
F-801807.ZL	8	490	**580**	750	515	305
F-804300.ZL	8	307	**600**	735	380	278
Z-577936.ZL	8	432	**600**	775	380	278
Z-567618.ZL	6	200	**610**	775	190	88
Z-572298.ZL	1	202	**610**	775	190	100

[1] Outer ring split (in vee-shape).

[2] Four-row.

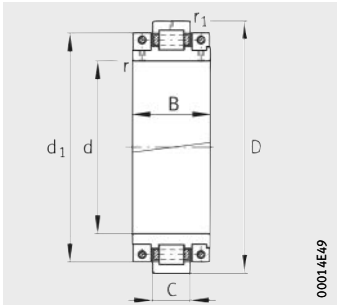

Design 6
Locating bearing

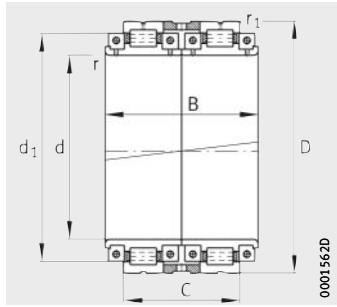

Design 8
Locating bearing

			Basic load ratings		Fatigue limit load
d_1	r	r_1	dyn. C_r	stat. C_{0r}	C_{ur}
	min.	min.	kN	kN	kN
378	6	6	1 460	2 600	270
440	12	4	2 400	3 400	325
–	2,4	3,2	815	1 530	134
433	5	5	1 900	4 750	470
443	2	2	915	1 900	182
–	3	3	415	880	71
433	4	4	1 160	2 900	280
–	5	5	1 630	2 500	198
–	5	5	2 240	4 300	335
549	7,5	3	3 100	7 800	730
508	5	5	2 080	3 750	350
508	5	5	2 080	3 750	350
–	2	2	1 160	2 320	186
580	3	3	2 200	4 150	380
–	5	5	2 850	7 650	640
565	3	3	1 060	2 500	223
600	8	5	1 290	2 900	260
600	8	5	2 240	5 850	520
622	12	5	3 200	8 150	730
–	12	5	5 300	9 300	780
–	2	2	1 120	2 280	178
668	3	3	2 750	8 150	710
668	3	3	2 750	8 150	710
645	3	3	1 250	3 200	280
678	8	5	3 750	10 000	850
–	5	5	1 730	3 900	330
–	18	5	3 000	7 800	660
690	6	6	3 000	8 800	750
720	15	6	3 250	9 000	750
720	5	5	1 900	4 500	380
730	5	5	1 900	4 500	380

Split cylindrical roller bearings

Single and double row
Non-locating, semi-locating and locating bearings

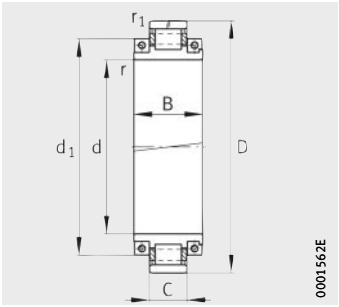

Design 1
Non-locating bearing

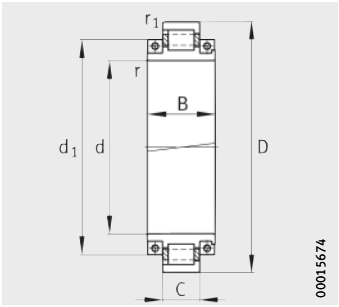

Design 3
Semi-locating bearing

Dimension table (continued) · Dimensions in mm

Designation	Design	Mass	Dimensions			
		m	d	D	B	C
		≈kg				
Z-526783.01.ZL	1	190	**630**	794	190	88
Z-526783.02.ZL	1	200	**630**	794	190	88
Z-526783.03.ZL	6	193	**630**	794	190	88
Z-549642.ZL	6	191	**630**	794	190	88
Z-548937.ZL	1	231	**630**	850	172	100
Z-548907.ZL	1	277	**630**	850	230	128
Z-568614.ZL	6	209	**640**	805	190	88
Z-574879.ZL	8	425	**640**	805	380	290
Z-579611.ZL	8	350	**650**	785	310	228
Z-573047.ZL	6	694	**650**	940	320	200
Z-573048.ZL	1	669	**650**	940	320	200
F-809831.ZL	6	720	**650**	980	320	200
F-809832.ZL	1	706	**650**	980	320	200
Z-525120.ZL	1	115	**670**	820	120	69
Z-556785.ZL	3	117	**670**	820	120	69
Z-526784.01.ZL	1	203	**690**	864	196	94
Z-577902.ZL	8	531	**690**	865	390	284
Z-514893.ZL	1	158	**710**	870	140	76
F-809613.ZL	8	447	**710**	880	380	290
Z-522468.ZL	7	260	**750**	920	185	106
Z-578276.ZL	8	550	**750**	920	400	300
Z-514128.ZL	1	541	**750**	940	210	128
Z-523125.ZL	7	325	**750**	940	210	128
F-801623.01.ZL	6	220	**775**	945	165	80
F-809722.ZL	8	470	**775**	945	330	245
Z-529031.01.ZL	7	470	**799,8**	1 080	210	128
F-801572.ZL	8	552	**820**	990	380	290

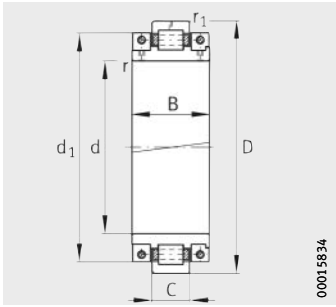

Design 6
Locating bearing

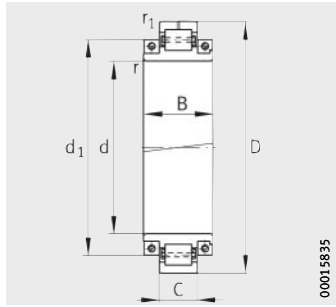

Design 7
With pin cage
Locating bearing

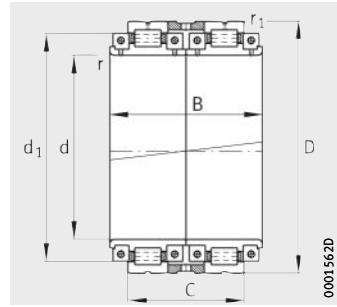

Design 8
Locating bearing

			Basic load ratings		Fatigue limit load
d_1	r	r_1	dyn. C_r	stat. C_{0r}	C_{ur}
	min.	min.	kN	kN	kN
740	5	2	1 900	4 650	390
740	16	3	1 900	4 650	390
740	5	2	1 900	4 650	390
740	5	5	1 900	4 650	390
738	6	6	2 280	4 650	390
–	6	6	2 800	6 100	455
750	5	5	1 960	4 650	390
750	5	5	3 750	11 000	920
–	5	5	2 500	7 350	530
810	6	6	5 600	11 800	960
810	6	6	5 600	11 800	960
835	6	6	5 600	10 400	830
835	6	9,5	5 600	10 400	830
760	4	4	1 290	2 900	232
760	4	4	1 290	2 900	232
805	6	2	2 240	5 400	440
815	12	6	3 550	10 200	840
–	5	5	1 370	3 150	248
822	12	6	3 900	11 400	910
–	7,5	7,5	2 600	7 350	540
870	5	5	3 900	12 000	970
–	7,5	7,5	2 600	7 500	540
880	9,5	7,5	2 900	8 650	560
895	10	5	1 830	4 550	360
895	10	5	3 100	9 150	720
–	9,5	9,5	4 050	9 000	600
–	5	5	4 300	14 000	970

Split cylindrical roller bearings

Single and double row
Non-locating, semi-locating and locating bearings

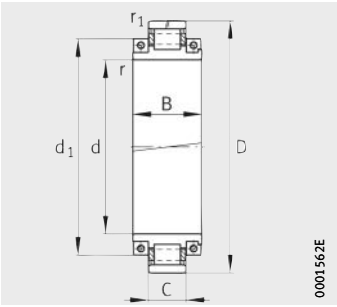

Design 1
Non-locating bearing

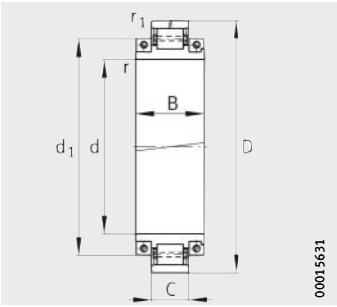

Design 2
With pin cage
Non-locating bearing

Dimension table (continued) · Dimensions in mm

Designation	Design	Mass	Dimensions			
		m	d	D	B	C
		≈kg				
Z-540908.ZL	4	205	**900**	1 090	150	85
Z-522292.ZL	1	213	**900**	1 090	150	85
Z-537876.ZL	4	189	**950**	1 150	160	90
Z-527210.ZL	7	596	**950**	1 220	220	128
Z-525667.ZL	7	591	**1 000**	1 255	222,5	115
Z-513201.ZL	2	667	**1 000**	1 255	240	150
Z-533265.ZL	2	1 190	**1 150**	1 490	305	175
Z-533266.ZL	7	1 210	**1 150**	1 490	305	175
Z-526112.ZL	6[1)]	603	**1 250**	1 500	192	112
Z-531338.01.ZL	5	909	**1 400**	1 700	225	132
Z-537179.ZL	1	1 680	**1 700**	2 060	300	160

1) Without lubrication groove and lubrication hole.

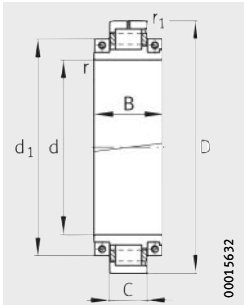

Design 4
Semi-locating bearing

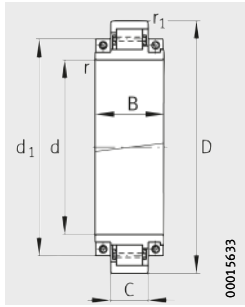

Design 5
With pin cage
Semi-locating bearing

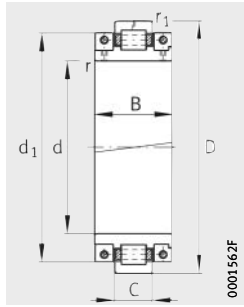

Design 6
Locating bearing

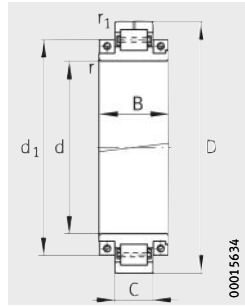

Design 7
With pin cage
Locating bearing

			Basic load ratings		Fatigue limit load
d_1	r min.	r_1 min.	dyn. C_r kN	stat. C_{0r} kN	C_{ur} kN
–	6	6	1 900	4 650	290
–	5	5	1 930	4 750	290
–	6	6	2 000	4 900	310
–	9,5	9,5	4 400	10 400	810
–	9,5	7,5	3 800	10 000	830
1 168	6	6	4 550	12 700	940
1 355	12	7,5	6 800	17 300	1 210
1 355	12	7,5	6 800	17 300	1 210
1 413	6	6	3 350	8 800	520
1 570	6	6	5 400	15 000	1 020
1 900	7,5	7,5	6 800	18 000	1 120

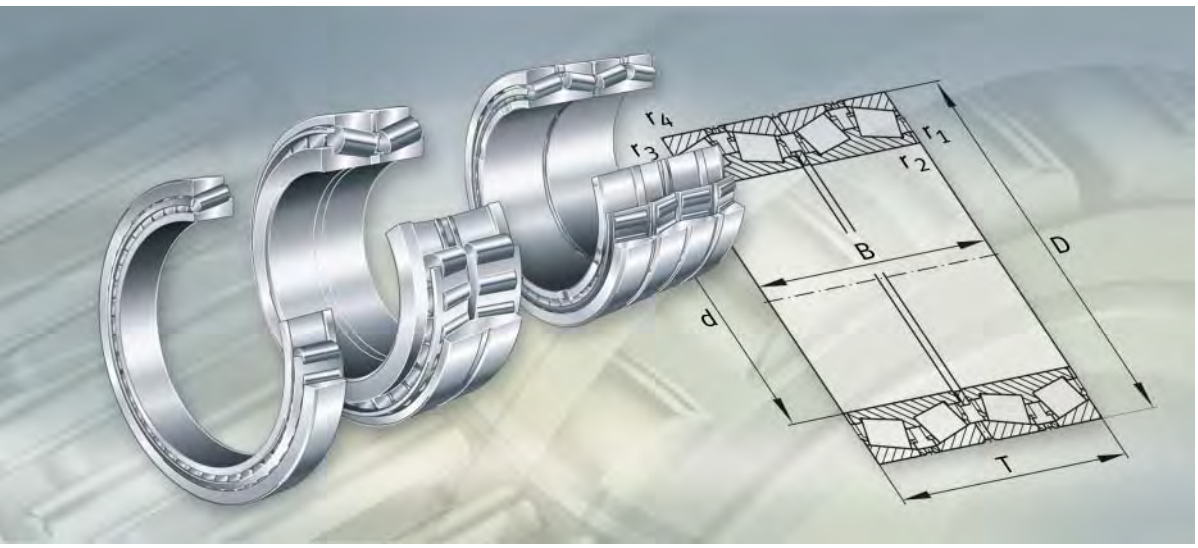

Tapered roller bearings

Single row
Double row
Four-row



Tapered roller bearings

Single row tapered roller bearings

..... 496

In some single row tapered roller bearings, the outer ring can be removed. As a result, the rings can be mounted separately. Tapered roller bearings can support high radial loads and can support axial forces in one direction. They must normally be axially adjusted against a second bearing mounted in a mirror image arrangement. Single row tapered roller bearings matched in an X arrangement can support high axial forces from both directions. In addition to bearings with standardised main dimensions (DIN 720), bearings in metric and inch sizes with non-standardised designations (Z-5..TR1 or F-8..TR1) are also available.
A typical application for single row tapered roller bearings is in gearboxes.

Double row tapered roller bearings

..... 520

The bearings can support high radial and axial loads.
The main dimensions and designations are not standardised in DIN and ISO.

Bearings with two outer rings and an outer intermediate ring are designed for a loose fit on the roll journal. A similar design with extended inner rings achieves a tight fit when used in conjunction with a tapered bore.

Bearings with one outer ring have two inner rings and are used, for example, as cable sheave bearings in drilling towers.
Bearings with one inner intermediate ring are used, for example, in rolling mills. Double row tapered roller bearings with two outer rings, without an intermediate ring and with a particularly large contact angle are suitable for supporting very high axial forces.
They are used as axial bearings, for example for work rolls or oil film bearings.

Four-row tapered roller bearings

..... 556

Four-row tapered roller bearings are special bearings for rolling mills. They can support axial forces in both directions as well as very high radial forces. The bearings are separable but must be mounted as complete units in the chock before this is slid onto the roll journal. Four-row bearings with a cylindrical bore are therefore designed for a loose fit on the roll journal. Lubrication of the journal is improved in many cases by a helical groove in the bore of the inner ring. For high speeds and loads, a tight fit on the journal is necessary. In this case, we can by agreement supply four-row bearings with a tapered bore. Four-row tapered roller bearings with integral seals can achieve longer life than open bearings as a result of better lubrication and cleanliness. The main dimensions and designations are not standardised in DIN and ISO.

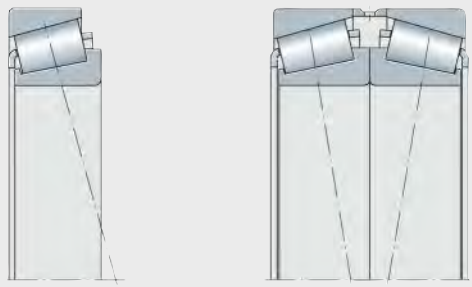

000152FE

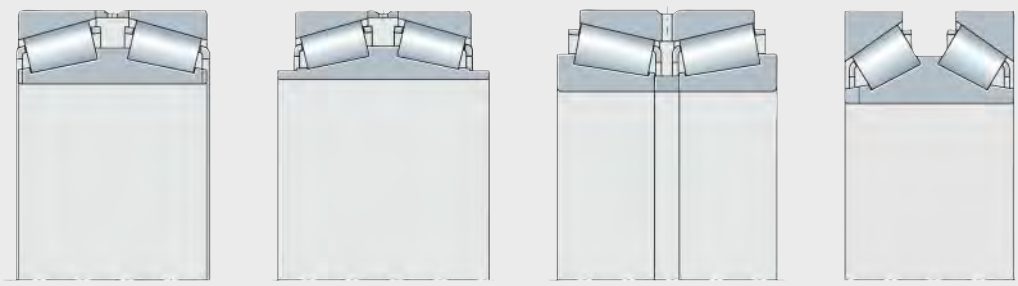

00015305

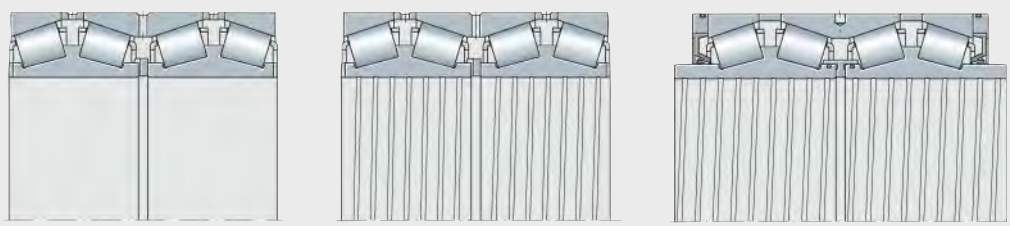

00015313

FAG

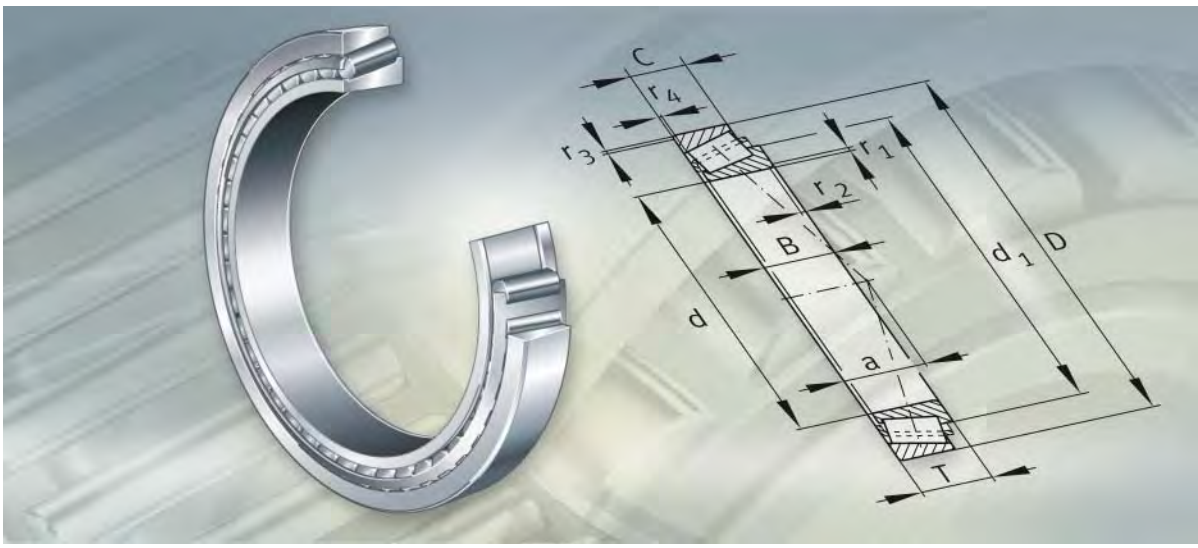

Single row tapered roller bearings

Single row tapered roller bearings

		Page
Product overview	Single row tapered roller bearings	498
Features	Radial and axial load capacity	499
	Compensation of angular misalignments	499
	Matched bearings	500
	Sealing	500
	Lubrication	500
	Operating temperature	500
	Cages	500
	Suffixes	500
Design and safety guidelines	Calculation of axial force	501
	Equivalent dynamic bearing load	503
	Equivalent static bearing load	504
	Basic load ratings and fatigue limit load for bearing pairs	505
	Minimum radial load	505
	Speeds	505
	Design of bearing arrangements	505
Accuracy	Bearings in metric sizes	506
	Bearings in inch sizes	508
	Axial internal clearance	510
Dimension tables	Tapered roller bearings, single row	512
	Tapered roller bearings, matched, in X arrangement	516



Single row

302, 303, 313, 320, 322, 323..-A, 329, Z-5..TR1, F-8..TR1



Matched
In X arrangement

302..-N11CA, 303..-N11CA, 313..-N11CA, 320..-N11CA, 322..-N11CA, 323..-N11CA, 329..-N11CA

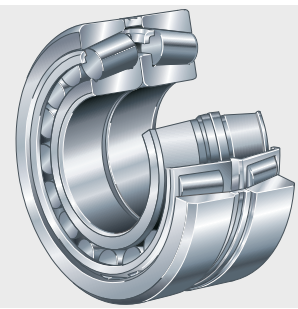

Single row tapered roller bearings

Features

Single row tapered roller bearings comprise solid inner and outer rings with tapered raceways and tapered rollers with cages made from pressed sheet steel.

The bearings are not self-retaining. As a result, the inner ring with the rollers and the cage can be mounted separately from the outer ring.

In addition to bearings with standardised main dimensions and standardised designations, special bearings in metric and inch sizes with non-standardised designations (Z-5..TR1 or F-8..TR1) are also available.

For new designs, bearings in metric sizes should always be used in preference.

Radial and axial load capacity

Single row tapered roller bearings can support axial forces in one direction and high radial forces.
They must normally be axially adjusted against a second bearing mounted in a mirror image arrangement. This bearing combination is mounted in an O or X arrangement, *Figure 1* and *Figure 2*, page 501.

Contact angle

The axial load carrying capacity is dependent on the contact angle; i.e. the larger the angle, the higher the axial load to which the bearing can be subjected.

The size of the contact angle and thus the load carrying capacity is indicated by the bearing-specific value e in the dimension tables. Bearings of series 313 have a very high axial load carrying capacity due to their particularly large contact angle.

Compensation of angular misalignments

The modified line contact between the tapered rollers and the raceways ensures optimum stress distribution at the contact points, prevents edge stresses and allows the bearings to undergo angular adjustment.

At a load ratio $P/C_r \leqq 0{,}2$, the tilting of the bearing rings relative to each other must not exceed a maximum of 4 angular minutes. For higher loads or tilting angles, please contact us.



Matched bearings

Tapered roller bearings with the suffix N11CA are matched in pairs in an X arrangement and can therefore support high axial forces in both directions and moment loads.

The axial internal clearance of the bearing pair is defined by a ring between the two outer rings and is indicated in the suffix, see section Axial internal clearance, page 510.

We can also supply bearing pairs by agreement matched in an O arrangement (N11BA).

When ordering, the number of bearings must be stated, not the number of bearing pairs.

Sealing

Tapered roller bearings in either standard design or in matched pairs are not sealed.

Lubrication

They can be lubricated using oil or grease.

Operating temperature

Single row tapered roller bearings can be used at operating temperatures from –30 °C to +120 °C.
For continuous operating temperatures > +120 °C, please contact us.

Bearings with outside diameters of more than 240 mm are dimensionally stable up to +200 °C.

Cages

Single row tapered roller bearings have pressed cages made from sheet steel.

Since these project laterally to a certain extent, the mounting dimensions in the dimension tables and the cage projection, page 505, must be observed.

Suffixes

Suffixes for available designs: see table.

Available designs

Suffix	Description	Design
A	Modified internal construction	Standard
N11CA-A..	Two tapered roller bearings matched in an X arrangement, with an intermediate ring between the outer rings. Axial internal clearance in µm	
W209C	Rings and rollers made from case hardening steel	
X	External dimensions matched to international standards	
P5	Increased accuracy	Special design, available by agreement and in certain series only

Design and safety guidelines
Calculation of axial force

Under radial load, an internal axial force is induced in the bearing that must be supported by a second bearing and taken into consideration when calculating the equivalent bearing load.

Depending on the bearing arrangement (O or X arrangement), the axial force must first be determined for bearings adjusted clearance-free without preload, *Figure 1* and *Figure 2* as well as the table, page 502.

The following preconditions apply:

- The radial forces act at the central pressure points and are positive.
- Bearing A is subjected to a radial load F_{rA}, bearing B to a load F_{rB}.
- F is an external axial force acting on bearing A.

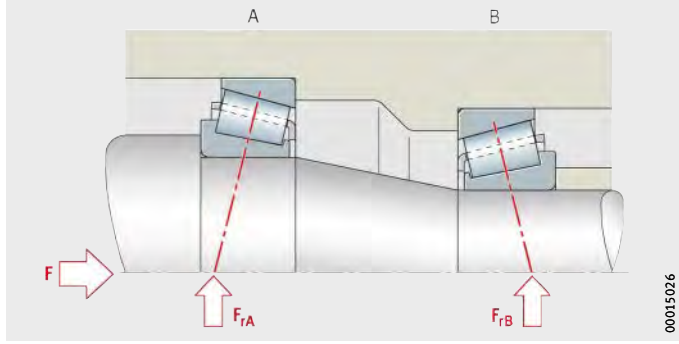

Figure 1
Bearings in O arrangement

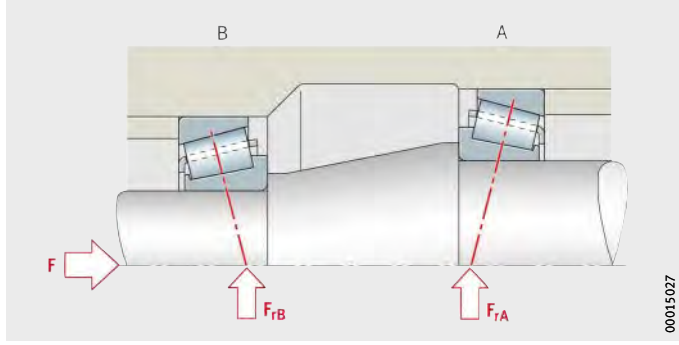

Figure 2
Bearings in X arrangement

Load ratio and axial bearing load

Load ratio		Axial force F_a [1]	
Radial bearing load	External axial force	Bearing A	Bearing B
$\frac{F_{rA}}{Y_A} \leqq \frac{F_{rB}}{Y_B}$	$F \geqq 0$	$F_a = F + 0,5 \cdot \frac{F_{rB}}{Y_B}$	[2]
$\frac{F_{rA}}{Y_A} > \frac{F_{rB}}{Y_B}$	$F > 0,5 \cdot \left(\frac{F_{rA}}{Y_A} - \frac{F_{rB}}{Y_B} \right)$	$F_a = F + 0,5 \cdot \frac{F_{rB}}{Y_B}$	[2]
	$F \leqq 0,5 \cdot \left(\frac{F_{rA}}{Y_A} - \frac{F_{rB}}{Y_B} \right)$	[2]	$F_a = 0,5 \cdot \frac{F_{rA}}{Y_A} - F$

[1] Axial force F_a, to be used in calculation of the equivalent dynamic bearing load.

[2] If no equation is given, the axial force is not taken into consideration.

Equivalent dynamic bearing load

The equivalent dynamic load P is valid for bearings that are subjected to radial and axial dynamic loads. It gives the same rating life as the combined bearing load occurring in practice.

For bearings under dynamic loading, the following applies:

Single bearings under dynamic load

Load ratio	Equivalent dynamic load
$\frac{F_a}{F_r} \leqq e$	$P = F_r$
$\frac{F_a}{F_r} > e$	$P = 0{,}4 \cdot F_r + Y \cdot F_a$

P kN
Equivalent dynamic bearing load for combined load
F_a kN
Axial dynamic bearing load
F_r kN
Radial dynamic bearing load
e, Y –
Factors, see dimension tables.

For bearing pairs under dynamic load in an X or O arrangement, the following applies:

Bearing pairs under dynamic load

Load ratio	Equivalent dynamic load
$\frac{F_a}{F_r} \leqq e$	$P = F_r + 1{,}12 \cdot Y \cdot F_a$
$\frac{F_a}{F_r} > e$	$P = 0{,}67 \cdot F_r + 1{,}68 \cdot Y \cdot F_a$

P kN
Equivalent dynamic bearing load for combined load
F_a kN
Axial dynamic bearing load of bearing pair
F_r kN
Radial dynamic bearing load of bearing pair
e, Y –
Factors for single bearing, see dimension tables.

For matched bearing pairs under dynamic load (suffix N11CA), the following applies:

Matched bearing pairs under dynamic load

Load ratio	Equivalent dynamic load
$\frac{F_a}{F_r} \leqq e$	$P = F_r + Y_1 \cdot F_a$
$\frac{F_a}{F_r} > e$	$P = 0{,}67 \cdot F_r + Y_2 \cdot F_a$



P kN
Equivalent dynamic bearing load for combined load
F_a kN
Axial dynamic bearing load of bearing pair
F_r kN
Radial dynamic bearing load of bearing pair
e, Y_1, Y_2 –
Factors for bearing pair, see dimension tables.

Equivalent static bearing load

The equivalent static load P_0 is valid for bearings that are subjected to radial and axial static loads. It induces the same load at the centre point of the most heavily loaded contact point between the rolling element and raceway as the combined bearing load occurring in practice.

Single bearings under static load

For single bearings under static load, the following applies:

Load ratio	Equivalent static load
$\frac{F_{0a}}{F_{0r}} \leqq \frac{1}{2 \cdot Y_0}$	$P_0 = F_{0r}$
$\frac{F_{0a}}{F_{0r}} > \frac{1}{2 \cdot Y_0}$	$P_0 = 0{,}5 \cdot F_{0r} + Y_0 \cdot F_{0a}$

P_0 kN
Equivalent static bearing load for combined load

F_{0a} kN
Axial static bearing load

F_{0r} kN
Radial static bearing load

Y_0 –
Factor, see dimension tables.

Bearing pairs under static load

For bearing pairs under static load in an X or O arrangement, the following applies:

$$P_0 = F_{0r} + 2 \cdot Y_0 \cdot F_{0a}$$

P_0 kN
Equivalent static bearing load for combined load

F_{0a} kN
Axial static bearing load of bearing pair

F_{0r} kN
Radial static bearing load of bearing pair

Y_0 –
Factor for single bearing, see dimension tables.

Matched bearing pairs under static load

For matched bearing pairs under static load (suffix N11CA), the following applies:

$$P_0 = F_{0r} + Y_0 \cdot F_{0a}$$

P_0 kN
Equivalent static bearing load for combined load

F_{0a} kN
Axial static bearing load of bearing pair

F_{0r} kN
Radial static bearing load of bearing pair

Y_0 –
Factor for bearing pair, see dimension tables.

Basic load ratings and fatigue limit load for bearing pairs

If two bearings of the same size and design are mounted immediately adjacent to each other in an O or X arrangement, the basic dynamic load rating C_r, the basic static load rating C_{0r} and the fatigue limit load C_{ur} of the bearing pair are as follows:

- $C_r = 1{,}715 \cdot C_{r\ single\ bearing}$
- $C_{0r} = 2 \cdot C_{0r\ single\ bearing}$
- $C_{ur} = 2 \cdot C_{ur\ single\ bearing}$.

Matched bearings

For matched bearing pairs (suffix N11CA), the basic load ratings are given in the dimension tables.

Minimum radial load

In order to ensure operation without slippage, the bearings must be subjected to a minimum load $F_{r\ min}$ in a radial direction. This applies particularly in the case of high speeds and high accelerations. For continuous operation, roller bearings with cage must therefore be subjected to a minimum radial load of the order of $P/C_r \geqq 0{,}02$.

Speeds

The limiting speeds n_G in the dimension tables must not be exceeded.

Matched bearings

The limiting speed n_G is possible if the less favourable thermal balance of the bearing pair is taken into consideration in the operating conditions.

Design of bearing arrangements

Shaft and housing tolerances

Recommended shaft tolerances for radial bearings with cylindrical bore, see table, page 130.

Recommended housing tolerances for radial bearings, see table, page 131.

Mounting dimensions

The dimension tables give the maximum dimensions of the radii r_a and r_b and the diameters of the abutment shoulders.

Cage projection

The cages project laterally to a certain extent. In order to prevent grazing, the lateral minimum distances C_a and C_b in the dimension tables must be taken into consideration in the design of the adjacent construction.



Accuracy

Bearings in metric sizes

The main dimensions of the standardised bearings conform to DIN ISO 355 and DIN 720, the dimensional and running tolerances conform to DIN 620-2.

Width tolerance to PN

Single row tapered roller bearings 303, 313, 322 and 323..-A correspond to tolerance class PN.

Bearings 320 and 329 for shaft diameters of more than 200 mm have width tolerances to tolerance class PN.

Inner ring tolerances, Part 1

Bore		Bore deviation		Variation		Radial runout
d mm		Δ_{dmp} µm		V_{dp} µm	V_{dmp} µm	K_{ia} µm
over	incl.	max.	min.	max.	max.	max.
120	180	0	−25	25	19	35
180	250	0	−30	30	23	50
250	315	0	−35	35	26	60
315	400	0	−40	40	30	70
400	500	0	−45	45	–	70
500	630	0	−50	50	–	85
630	800	0	−75	75	–	100

Inner ring tolerances, Part 2

Bore		Width deviation		Width deviation					
d mm		Δ_{Bs} µm		Δ_{Ts} µm		Δ_{T1s} µm		Δ_{T2s} µm	
over	incl.	max.	min.	max.	min.	max.	min.	max.	min.
120	180	0	−250	+350	−250	+150	−150	+200	−100
180	250	0	−300	+350	−250	+150	−150	+200	−100
250	315	0	−350	+350	−250	+150	−150	+200	−100
315	400	0	−400	+400	−400	+200	−200	+200	−200
400	500	0	−450	+450	−450	–	–	–	–
500	630	0	−500	+500	−500	–	–	–	–
630	800	0	−750	+600	−600	–	–	–	–

Outer ring tolerances

Outside diameter		Outside diameter deviation		Variation		Radial runout
D mm		Δ_{Dmp} µm		V_{Dp} µm	V_{Dmp} µm	K_{ea} µm
over	incl.	max.	min.	max.	max.	max.
315	400	0	−40	40	30	70
400	500	0	−45	45	34	80
500	630	0	−50	50	38	100
630	800	0	−75	75	–	120
800	1000	0	−100	100	–	120

The width tolerance Δ_{Cs} is identical to Δ_{Bs} for the inner ring of the same bearing.

Restricted tolerance P5

We can by agreement supply tapered roller bearings with restricted tolerances to tolerance class P5 to DIN 620-2.

Inner ring tolerances, Part 1

Bore d mm		Bore deviation Δ_{dmp} µm		Variation V_{dp} µm	V_{dmp} µm	Radial runout K_{ia} µm
over	incl.	max.	min.	max.	max.	max.
120	180	0	–18	14	9	11
180	250	0	–22	17	11	13
250	315	0	–25	–	–	–
315	400	0	–30	–	–	–
400	500	0	–35	–	–	–
500	630	0	–40	–	–	–
630	800	0	–75	–	–	–

Inner ring tolerances, Part 2

Bore d mm		Width deviation Δ_{Bs} µm		Width deviation Δ_{Ts} µm	
over	incl.	max.	min.	max.	min.
120	180	0	–500	+350	–250
180	250	0	–600	+350	–250
250	315	0	–	+350	–250
315	400	0	–	+400	–400
400	500	0	–	+400	–400
500	630	0	–	+500	–500
630	800	0	–	+600	–600

Outer ring tolerances

Outside diameter D mm		Outside diameter deviation Δ_{Dmp} µm		Variation V_{Dp} µm	V_{Dmp} µm	Radial runout K_{ea} µm
over	incl.	max.	min.	max.	max.	max.
315	400	0	–28	22	14	20
400	500	0	–33	–	–	23
500	630	0	–38	–	–	25
630	800	0	–45	–	–	30
800	1000	0	–60	–	–	35



Total width tolerance of matched bearings

The total width tolerance of bearing pairs with the suffix N11CA is determined from the axial internal clearance and the deviations of the width Δ_{Ts} of the single bearings, see table Inner ring tolerances, Part 2, page 506.

Bearings in inch sizes

Tapered roller bearings in inch sizes are manufactured as standard with normal tolerances to ANSI/ABMA.
The deviation of the width Δ_{Bs} and radial runout correspond to tolerance class PN to DIN 620-2.

In contrast to the metric bearings, bearings in inch sizes have plus tolerances on the bore and outside diameter.

Inner ring tolerances, Part 1

Bore d mm		Bore deviation Δ_{dmp} µm		Width deviation Δ_{Ts} µm	
over	incl.	max.	min.	max.	min.
127	305	+25	0	+350	−250
305	508	+50	0	+375	−375
508	610	+50	0	+375	−375
610	915	+75	0	+375	−375
915	1220	+100	0	+375	−375
1220	–	+125	0	+375	−375

Inner ring tolerances, Part 2

Bore d mm		Width deviation (in relation to bore) Δ_{Bs} µm		Radial runout K_{ia} µm
over	incl.	max.	min.	max.
180	250	0	−300	50
250	315	0	−350	60
315	400	0	−400	70
400	500	0	−450	70
500	630	0	−500	85
630	800	0	−750	100
800	1000	0	−1000	120

Outer ring tolerances, Part 1

Outside diameter D mm		Outside diameter deviation Δ_{Dmp} µm	
over	incl.	max.	min.
–	305	+25	0
305	610	+50	0
610	915	+75	0
915	1220	+100	0

Outer ring tolerances, Part 2

Outside diameter D mm		Radial runout K_{ea} µm
over	incl.	max.
315	400	70
400	500	80
500	630	100
630	800	120
800	1000	120
1000	1250	120

Chamfer dimensions for bearings in inch sizes

The values for the chamfer dimensions r apply to tapered roller bearings in inch sizes. Values for metric tapered roller bearings, see section Technical principles, table, page 118.

Limit values for chamfer dimensions r_{max} for the inner ring

Nominal bearing bore diameter d mm		Chamfer dimension[1)]	
		r_1 mm	r_2 mm
over	incl.		
101,6	254	+0,65	+1,8

[1)] $\overline{r_{min}}$: see dimension table.

Limit values for chamfer dimensions r_{max} for the outer ring

Nominal outside diameter D mm		Chamfer dimension[1)]	
		r_3 mm	r_4 mm
over	incl.		
266,7	355,6	+1,7	+1,7

[1)] $\overline{r_{min}}$: see dimension table.



Axial internal clearance

In tapered roller bearings, the axial internal clearance is the result of mounting against a second bearing during installation.

Matched bearings

The axial internal clearance is defined by an intermediate ring and is indicated in the suffix.

Example:

- A400-450 indicates that the axial internal clearance of the bearing pair before mounting is between 400 μm and 450 μm.

Once bearing pairs are mounted, the preset axial internal clearance is reduced by the fit conditions and the axial clamping forces.



Tapered roller bearings

Single row

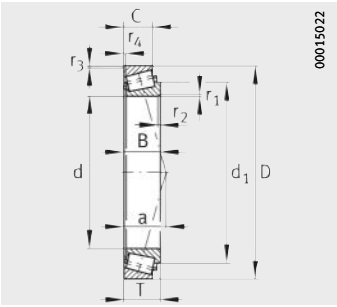

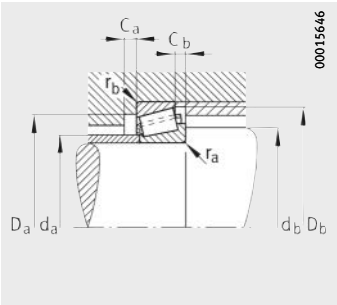

Mounting dimensions

Dimension table · Dimensions in mm

Designation	Mass	Dimensions									Mounting dimensions	
	m	d	D	T	B	C	r_1, r_2	r_3, r_4	a	d_1	d_a	d_b
	≈kg						min.	min.	≈	≈	max.	min.
31330-X	28	**150**	320	82	75	50	5	4	100	231	181	168
32330-A	46,1	**150**	320	114	108	90	5	4	79	230	184	167
30332-A	29,9	**160**	340	75	68	58	5	4	63	237	201	178
Z-536739.TR1	34	**160**	340	87	79	54	5	4	107	253	189	206
32332	49,5	**160**	340	121	114	95	5	4	86	245	190	177
Z-536748.01.TR1	29,6	**170**	330	85	79	54	5	4	103	253	191	218
30334-A	35,3	**170**	360	80	72	62	5	4	67	252	213	188
Z-529416.TR1	39,2	**170**	360	92	84	56	5	4	113	260	194	210
32334	61,3	**170**	360	127	120	100	5	4	89	256	208	187
30236-A	17,9	**180**	320	57	52	43	5	4	62	242	211	198
32236-A	30,1	**180**	320	91	86	71	5	4	77	249,5	204	198
30336	40,9	**180**	380	83	75	64	5	4	69	–	230	197
Z-534422.TR1	45,9	**180**	380	97	88	60	5	4	119	274	210	197
Z-534215.TR1	30,1	**190**	340	80	80	55	5	4	103	269,9	210	230
32238-A	39,1	**190**	340	97	92	75	5	4	81	263	216	207
Z-538034.TR1	54,1	**190**	400	100	90	65	5	4	115	292,9	224	242
32338	83,2	**190**	400	140	132	109	6	5	97	281	230	210
30240-A	25,2	**200**	360	64	58	48	5	4	69	272	237	217
32240-A	43,2	**200**	360	104	98	82	5	4	83	274,5	226	217
30340	52,3	**200**	420	89	80	67	6	5	76	294	250	220
Z-538035.TR1	65,1	**200**	420	110	100	70	5	4	130	308,6	229	250
Z-514561.TR1	33,4	**206,375**	336,55	98,425	100,012	77,788	3,3	3,3	74	271,7	227	231
Z-514561.TR1-W209C	33,3	**206,375**	336,55	98,425	100,012	77,788	3,3	3,3	74	271,7	227	231
32044-X	24,3	**220**	340	76	76	57	4	3	73	280	243	234
Z-534216.TR1	44,8	**220**	400	90	90	62	5	4	118	313	249	266
32244-A	59,5	**220**	400	114	108	90	5	4	95	310,5	258	237
Z-531856.TR1	47	**230**	425	85	78	50	6	6	133	330,5	53	54
Z-536377.TR1	22,8	**234,95**	355,6	68,263	66,675	47,625	7	3,3	86	295,9	249	265
32948	11,1	**240**	320	51	51	39	3	2,5	65	281	254	252
32048-X	25,9	**240**	360	76	76	57	4	3	79	300	261	254
30248	48	**240**	440	79	72	60	5	4	76	325	285	257
32248-A	80,5	**240**	440	127	120	100	5	4	105	332	286	257
30348	88,6	**240**	500	105	95	80	6	5	90	347,5	296	260
Z-501927.TR1	21,3	**254**	358,775	71,438	71,438	53,975	3,6	3,3	65	302	270	274
Z-521849.TR1	14,5	**257,175**	342,9	57,15	57,15	44,45	6,4	3,3	72	301,5	269	281

							Basic load ratings		Calculation factors			Fatigue limit load	Limiting speed	Reference speed	Interchange designation to ISO 355
D_a		D_b	C_a	C_b	r_a	r_b	dyn. C_r	stat. C_{0r}	e	Y	Y_0	C_{ur}	n_G	n_B	
min.	max.	min.	min.	min.	max.	max.	kN	kN				kN	min^{-1}	min^{-1}	
251	302	300	9	32	5	4	790	1 040	0,83	0,73	0,4	115	2 240	1 530	T7GB150
264	302	299	12	24	5	4	1 330	1 950	0,35	1,74	0,96	221	2 240	1 320	–
290	322	310	9	17	5	4	890	1 140	0,35	1,74	0,96	123	2 240	1 510	T2GB160
268	–	321	9	33	5	4	890	1 190	0,83	0,73	0,4	128	2 200	–	–
280	–	320	12	26	5	4	1 170	1 740	0,38	1,58	0,87	194	2 100	1 390	–
260	–	311	9	31	5	4	810	1 150	0,8	0,75	0,41	126	2 100	–	–
307	342	329	9	18	5	4	1 040	1 360	0,35	1,74	0,96	146	2 100	1 350	–
304	–	336	9	30	5	4	1 010	1 360	0,83	0,73	0,4	145	2 000	–	–
295	–	335	12	27	5	4	1 640	2 550	0,36	1,67	0,92	280	1 960	1 090	–
278	302	297	9	14	5	4	610	850	0,45	1,33	0,73	93	2 240	1 500	T4GB180
267	302	303	10	20	5	4	1 010	1 640	0,45	1,33	0,73	187	2 100	1 230	T4GD180
327	–	350	10	19	5	4	1 120	1 470	0,35	1,74	0,96	155	1 960	1 260	–
297	–	356	10	37	5	4	1 100	1 500	0,83	0,73	0,4	158	1 800	–	–
269	–	320	12	25	5	4	810	1 310	0,78	0,77	0,42	144	2 000	–	–
286	322	323	10	22	5	4	1 140	1 820	0,44	1,38	0,76	203	1 960	1 260	T4GD190
314	–	370	11	35	5	4	1 170	1 620	0,73	0,82	0,45	169	1 700	–	–
330	–	373	14	31	6	5	1 960	2 950	0,35	1,73	0,95	315	1 680	970	–
315	342	336	9	16	5	4	760	1 060	0,44	1,38	0,76	113	1 960	1 300	T4GB200
302	342	340	11	22	5	4	1 320	2 080	0,41	1,48	0,81	225	1 960	1 060	T3GD200
360	–	385	10	22	6	5	1 300	1 720	0,35	1,74	0,96	174	1 680	1 110	–
328	–	395	12	40	5	4	1 390	1 890	0,79	0,76	0,42	192	1 500	–	–
306	–	318	8,5	14,5	3,3	3,3	1 120	2 000	0,34	1,78	0,98	223	2 000	–	–
306	–	317,7	10	16,5	3,3	3,3	1 120	2 000	0,34	1,78	0,98	223	2 000	–	–
300	326	326	12	19	4	3	890	1 630	0,43	1,39	0,77	179	1 820	1 130	T4FD220
321	–	376	10	28	5	4	1 020	1 570	0,75	0,8	0,44	164	1 500	–	–
336	382	380	12	24	5	4	1 540	2 550	0,44	1,38	0,76	270	1 540	910	–
68,4	–	78,6	9	35	6	6	950	1 440	0,88	0,68	0,37	146	1 400	–	–
318	–	333	7	21	7	3,3	660	1 310	0,59	1,02	0,56	144	1 800	–	–
294	308	311	9	12	3	2,5	510	1 050	0,46	1,31	0,72	116	1 960	1 160	T4EC240
318	346	346	12	19	4	3	900	1 680	0,46	1,31	0,72	181	1 680	1 060	T4FD240
383	–	410	10	19	5	4	870	1 260	0,36	1,68	0,92	126	1 540	1 120	–
372	422	415	14	27	5	4	1 850	3 100	0,44	1,38	0,76	320	1 400	800	–
425	–	454	12	25	6	5	1 780	2 410	0,35	1,74	0,96	232	1 330	870	–
335	–	343	8	17	3,6	3,3	800	1 560	0,34	1,76	0,97	168	1 700	–	–
322	–	333	6	12	6,4	3,3	500	1 150	0,46	1,29	0,71	126	1 800	–	–



Tapered roller bearings

Single row

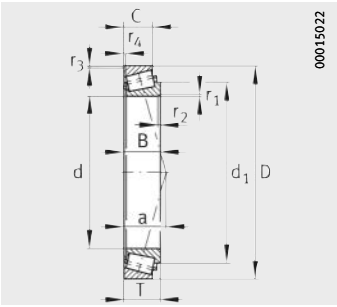

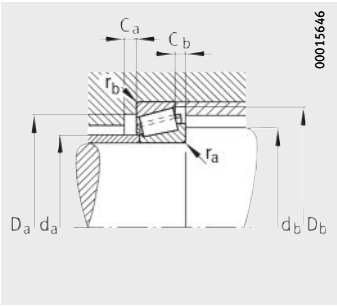

Mounting dimensions

Dimension table (continued) · Dimensions in mm

Designation	Mass	Dimensions									Mounting dimensions	
	m	d	D	T	B	C	r_1, r_2	r_3, r_4	a	d_1	d_a	d_b
	≈kg						min.	min.	≈	≈	max.	min.
32952	18,7	**260**	360	63,5	63,5	48	3	2,5	70	309	279	272
32052-X	41,1	**260**	400	87	87	65	5	4	86	331,5	287	278
30252-A	62,2	**260**	480	89	80	67	6	5	89	357	310	280
Z-507531.TR1	29,6	**260,35**	400,05	69,85	67,47	46,038	9,7	6,4	76	320,7	280	296
F-807586.TR1	15,7	**262**	355,6	57,15	57,15	44,45	3,6	3,3	61	312,5	281	285
Z-534990.TR1	5,72	**263,525**	325,438	28,575	28,575	25,4	1,5	1,5	48	295	277	277
32956	19,9	**280**	380	63,5	63,5	48	3	2,5	75	330	298	292
32056-X	40,5	**280**	420	87	87	65	5	4	91	349	305	298
32256	112	**280**	500	137	130	106	6	5	117	390	322	300
32960	31,4	**300**	420	76	76	57	4	3	80	362	324	314
32260	139	**300**	540	149	140	115	6	5	127	409,5	346	320
32964	33,5	**320**	440	76	76	57	4	3	86	382	343	334
32064-X	60,5	**320**	480	100	100	74	5	4	104	397,5	350	338
32264	170	**320**	580	159	150	125	6	5	136	439	372	340
32968	35,5	**340**	460	76	76	57	4	3	91	404	361	354
32972	37,1	**360**	480	76	76	57	4	3	97	423	380	374
Z-538300.TR1	19,1	**381**	479,425	49,212	47,625	34,925	6,4	3,3	75	429	395	406
Z-531341.01.TR1	76,6	**384,175**	546,1	104,775	104,775	82,55	6,4	6,4	98	459,5	407	417
Z-580755.TR1	6,68	**403,225**	460,375	28,575	28,575	20,638	3,5	3,3	70	431,1	414	418
Z-511041.TR1	27,2	**406,4**	508	61,912	61,912	47,625	3,3	3,3	83	455	423	426
Z-507170.TR1	43,3	**406,4**	546,1	76,2	61,12	55,562	6,4	6,4	113	469	425	435
Z-532528.TR1	93,4	**415,925**	590,55	114,3	114,3	88,9	6,4	6,4	105	492	441	451
Z-526434.TR1	115	**447,675**	635	120,65	120,65	95,25	6,4	6,4	111	534,9	474	484
Z-531546.TR1	68,1	**482,6**	634,873	80,962	80,962	63,5	6,4	3,3	116	564	510	516
Z-535194.TR1	56,7	**498,475**	634,873	80,962	80,962	63,5	6,4	3,3	116	564	524	529
Z-533416.TR1	115	**558,8**	736,6	104,775	104,775	80,962	6,4	6,4	121	645	585	594
Z-521901.TR1	110	**609,6**	787,4	93,662	93,662	69,85	6,4	6,4	156	699,5	633	642
F-808306.TR1	99,2	**620**	800	85	78	54	6	5	244	723	654	676
Z-507596.TR1	90,6	**670**	820	88	80	68	6	4	182	745	696	720
Z-510362.TR1	118	**723,9**	914,4	84,138	80,962	60,325	5,6	6,4	138	809	750	756
Z-534835.TR1	67	**760**	889	69,85	69,85	51,18	3,3	3,3	147	822,3	779	783
F-808307.TR1	235	**850**	1 090	115	106	77	7,5	7,5	218	963	900	918
F-808305.TR1	319	**1 000**	1 250	115	115	85	9,5	9,5	180	1 110	1 058	1 070

							Basic load ratings		Calculation factors			Fatigue limit load	Limiting speed	Reference speed	Interchange designation to ISO 355
D_a		D_b	C_a	C_b	r_a	r_b	dyn. C_r	stat. C_{0r}	e	Y	Y_0	C_{ur}	n_G	n_B	
min.	max.	min.	min.	min.	max.	max.	kN	kN				kN	min^{-1}	min^{-1}	
328	348	347	11	15,5	3	2,5	750	1 500	0,41	1,48	0,81	161	1 680	990	T3EC260
352	382	383	14	22	5	4	1 150	2 140	0,43	1,38	0,76	225	1 540	920	T4FC260
419	–	447	10	22	6	5	1 460	2 090	0,4	1,48	0,81	202	1 330	860	–
366	–	371,5	7	18	9,7	6,4	710	1 260	0,44	1,36	0,75	132	1 500	–	–
335	–	346	6	11	3,6	3,3	590	1 200	0,36	1,69	0,93	129	1 700	–	–
312	–	315	5	3	1,5	1,5	226	530	0,37	1,64	0,9	36	1 800	–	–
348	368	368	11	15,5	3	2,5	740	1 520	0,43	1,39	0,76	162	1 540	940	T4EC280
370	402	402	14	22	5	4	1 200	2 300	0,46	1,31	0,72	238	1 400	840	T4FC280
418	–	475	14	31	6	5	2 290	3 950	0,45	1,34	0,73	395	1 190	660	–
383	406	405	12	19	4	3	990	2 030	0,39	1,52	0,84	208	1 330	820	T3FD300
453	–	510	16	34	6	5	2 650	4 550	0,43	1,38	0,76	445	1 120	590	–
402	426	426	13	19	4	3	1 060	2 270	0,42	1,44	0,79	229	1 260	740	–
424	462	461	15	26	5	4	1 560	3 050	0,46	1,31	0,72	305	1 190	690	T4GD320
486	–	555	16	34	6	5	3 000	5 200	0,44	1,38	0,76	490	1 050	530	–
421	446	446	12	19	4	3	1 080	2 370	0,44	1,37	0,75	236	1 190	690	–
439	466	466	14	19	4	3	1 060	2 370	0,46	1,31	0,72	233	1 120	660	–
455	–	465	5	12	6,4	3,3	455	1 140	0,38	1,57	0,86	110	1 100	–	–
507	–	519	10	17,5	6,4	6,4	1 780	3 950	0,33	1,8	0,99	375	1 100	–	–
445	–	452	5	6	3,5	3,3	233	670	0,4	1,49	0,82	41	1 100	–	–
483	–	492	7	14	3,3	3,3	810	1 980	0,36	1,65	0,9	191	1 100	–	–
504	–	516	–	16,5	6,4	6,4	1 030	2 120	0,47	1,27	0,7	195	1 100	–	–
549	–	562,4	12	25	6,4	6,4	1 970	4 150	0,34	1,76	0,97	385	950	–	–
591	–	610	10	20	6,4	6,4	2 460	5 200	0,33	1,84	1,01	470	900	–	–
603	–	609	5	13,5	6,4	3,3	1 170	2 800	0,43	1,4	0,77	250	850	–	–
603	–	610	9	13	6,4	3,3	1 170	2 800	0,43	1,4	0,77	250	850	–	–
696	–	708	11	19	6,4	6,4	2 270	5 500	0,35	1,73	0,95	470	700	–	–
747	–	756	10	19	6,4	6,4	1 800	4 500	0,5	1,2	0,66	380	670	–	–
723	–	776	13	31	6	5	1 450	3 550	0,88	0,68	0,38	295	670	–	–
770	–	804	10	15	6	4	1 400	3 650	0,57	1,05	0,58	305	630	–	–
873	–	876	9	19	5,6	6,4	1 980	4 750	0,38	1,57	0,87	375	560	–	–
857	–	860	7	19	3,3	3,3	1 120	3 700	0,43	1,38	0,76	300	560	–	–
1 006	–	1 047	13	38	7,5	7,5	2 750	6 800	0,53	1,14	0,63	520	500	–	–
1 175	–	1 201	15	30	9,5	9,5	3 650	9 900	0,35	1,72	0,95	720	450	–	–



Tapered roller bearings

Matched pairs
in X arrangement

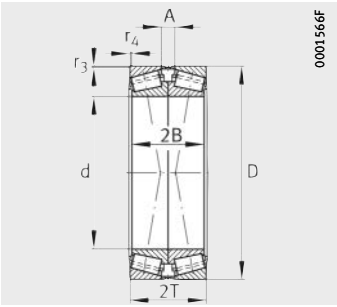

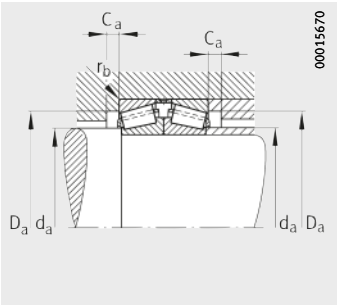

Mounting dimensions

Dimension table · Dimensions in mm

Designation	Mass for bearing pair	Dimensions						Mounting dimensions				
	m	d	D	2B	2T	r_3, r_4	A	d_a	D_a		C_a	r_b
	≈kg					min.		max.	min.	max.	min.	max.
30330-A-N11CA-A380-430	51,6	**150**	320	130	144	4	34	189	273	302	9	4
31330-X-N11CA	57,7	**150**	320	150	164	4	64	181	251	302	9	4
32330-A-N11CA	87,9	**150**	320	216	228	4	48	184	264	302	12	4
30332-A-N11CA	60,7	**160**	340	136	150	4	34	201	290	322	9	4
32332-N11CA	92,9	**160**	340	228	242	4	52	190	280	322	12	4
30334-A-N11CA	73,3	**170**	360	144	160	4	36	213	307	342	9	4
32334-N11CA	125	**170**	360	240	254	4	54	208	295	342	12	4
30236-A-N11CA	36	**180**	320	104	114	4	28	211	278	302	9	4
32236-A-N11CA	61,3	**180**	320	172	182	4	40	204	267	302	10	4
32236-A-N11CA-A430-480	61,3	**180**	320	172	182	4	40	204	267	302	10	4
30336-N11CA	83,7	**180**	380	150	166	4	38	230	327	362	10	4
32336-N11CA	128	**180**	380	252	268	4	56	215	310	362	14	4
30238-N11CA	41,9	**190**	340	110	120	4	28	224	298	322	9	4
32338-N11CA	164	**190**	400	264	280	5	62	230	330	377	14	5
30240-A-N11CA	52,9	**200**	360	116	128	4	32	237	315	342	9	4
30240-A-N11CA-A550-600	52,9	**200**	360	116	128	4	32	237	315	342	9	4
32240-A-N11CA	88,2	**200**	360	196	208	4	44	226	302	342	11	4
32240-A-N11CA-A400-450	88,2	**200**	360	196	208	4	44	226	302	342	11	4
30340-N11CA	107	**200**	420	160	178	5	44	250	360	397	10	5
32340-N11CA	168	**200**	420	276	292	5	62	240	345	397	14	5
32044-X-N11CA	49,4	**220**	340	152	152	3	38	243	300	326	12	3
32044-X-N11CA-A300-350	49,4	**220**	340	152	152	3	38	243	300	326	12	3
32244-A-N11CA	123	**220**	400	216	228	4	48	258	336	382	12	4
32244-A-N11CA-A400-450	123	**220**	400	216	228	4	48	258	336	382	12	4
30344-N11CA	136	**220**	460	176	194	5	48	274	392	437	10	5
32048-X-N11CA	58,3	**240**	360	152	152	3	38	261	318	346	12	3
32048-X-N11CA-A450-500	58,3	**240**	360	152	152	3	38	261	318	346	12	3
30248-N11CA	87,6	**240**	440	144	158	4	38	285	383	417	10	4
32248-A-N11CA	166	**240**	440	240	254	4	54	286	372	422	14	4
32248-A-N11CA-A450-500	166	**240**	440	240	254	4	54	286	372	422	14	4
30348-N11CA	177	**240**	500	190	210	5	50	296	425	477	12	5
32052-X-N11CA	77,5	**260**	400	174	174	4	44	287	352	382	14	4
32052-X-N11CA-A500-550	77,5	**260**	400	174	174	4	44	287	352	382	14	4

Basic load ratings		Calculation factors				Fatigue limit load	Limiting speed Bearing pair	Reference speed Bearing pair
dyn. C_r kN	stat. C_{0r} kN	e	Y_1	Y_2	Y_0	C_{ur} kN	n_G min^{-1}	n_B min^{-1}
1 380	2 050	0,35	1,96	2,91	1,91	225	2 240	1 310
1 360	2 090	0,83	0,82	1,22	0,8	230	2 240	1 220
2 270	3 900	0,35	1,96	2,91	1,91	445	2 240	1 060
1 520	2 280	0,35	1,96	2,91	1,91	246	2 240	1 210
2 010	3 450	0,38	1,78	2,65	1,74	385	2 100	1 120
1 780	2 700	0,35	1,96	2,91	1,91	290	2 100	1 090
2 800	5 100	0,36	1,87	2,79	1,83	560	1 960	870
1 040	1 700	0,45	1,5	2,23	1,47	185	2 240	1 200
1 730	3 300	0,45	1,5	2,23	1,47	375	2 100	990
1 730	3 300	0,45	1,5	2,23	1,47	375	2 100	990
1 930	2 950	0,35	1,96	2,91	1,91	310	1 960	1 010
2 460	4 350	0,38	1,78	2,65	1,74	470	1 820	950
910	1 560	0,39	1,75	2,61	1,71	169	2 120	1 210
3 350	5 900	0,35	1,95	2,9	1,91	630	1 680	780
1 300	2 120	0,44	1,55	2,31	1,52	225	1 960	1 040
1 300	2 120	0,44	1,55	2,31	1,52	225	1 960	1 040
2 270	4 150	0,41	1,66	2,47	1,62	450	1 960	850
2 270	4 150	0,41	1,66	2,47	1,62	450	1 960	850
2 230	3 450	0,35	1,96	2,91	1,91	350	1 680	880
3 000	5 300	0,37	1,8	2,69	1,76	560	1 680	820
1 530	3 250	0,43	1,57	2,34	1,53	355	1 820	910
1 530	3 250	0,43	1,57	2,34	1,53	355	1 820	910
2 650	5 100	0,44	1,55	2,31	1,52	540	1 540	730
2 650	5 100	0,44	1,55	2,31	1,52	540	1 540	730
2 470	3 750	0,35	1,96	2,91	1,91	370	1 400	820
1 540	3 350	0,46	1,47	2,19	1,44	360	1 680	850
1 540	3 350	0,46	1,47	2,19	1,44	360	1 680	850
1 490	2 550	0,36	1,89	2,81	1,85	255	1 540	890
3 150	6 200	0,44	1,55	2,31	1,52	660	1 400	640
3 150	6 200	0,44	1,55	2,31	1,52	660	1 400	640
3 050	4 800	0,35	1,96	2,91	1,91	465	1 330	700
1 980	4 300	0,43	1,55	2,31	1,52	450	1 540	730
1 980	4 300	0,43	1,55	2,31	1,52	450	1 540	730



Tapered roller bearings

Matched pairs
In X arrangement

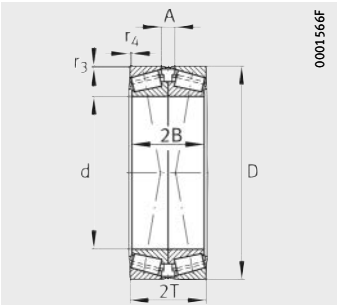

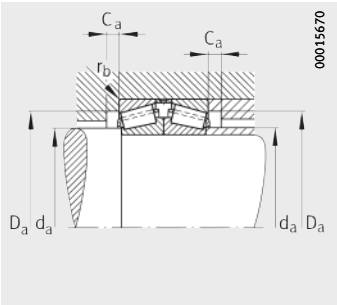

Mounting dimensions

Dimension table (continued) · Dimensions in mm

Designation	Mass for bearing pair	Dimensions						Mounting dimensions				
	m	d	D	2B	2T	r_3, r_4	A	d_a	D_a		C_a	r_b
	≈kg					min.		max.	min.	max.	min.	max.
32056-X-N11CA	82	**280**	420	174	174	4	44	305	370	402	14	4
32056-X-N11CA-A550-600	82	**280**	420	174	174	4	44	305	370	402	14	4
32256-N11CA	227	**280**	500	260	274	5	62	322	418	477	14	5
32960-N11CA	63,6	**300**	420	152	152	3	38	324	383	406	12	3
32960-N11CA-A650-700	63,6	**300**	420	152	152	3	38	324	383	406	12	3
32060-X-N11CA	117	**300**	460	200	200	4	52	329	404	442	15	4
32060-X-N11CA-A450-500	117	**300**	460	200	200	4	52	329	404	442	15	4
32964-N11CA	67,2	**320**	440	152	152	3	38	343	402	426	13	3
32964-N11CA-A600-650	67,2	**320**	440	152	152	3	38	343	402	426	13	3
32064-X-N11CA	125	**320**	480	200	200	4	52	350	424	462	15	4
32064-X-N11CA-A650-700	125	**320**	480	200	200	4	52	350	424	462	15	4
32968-N11CA	73,1	**340**	460	152	152	3	38	361	421	446	12	3
32968-N11CA-A550-600	73,1	**340**	460	152	152	3	38	361	421	446	12	3

Basic load ratings		Calculation factors				Fatigue limit load	Limiting speed Bearing pair	Reference speed Bearing pair
dyn. C_r kN	stat. C_{0r} kN	e	Y_1	Y_2	Y_0	C_{ur} kN	n_G min^{-1}	n_B min^{-1}
2 050	4 600	0,46	1,47	2,19	1,44	475	1 400	670
2 050	4 600	0,46	1,47	2,19	1,44	475	1 400	670
3 950	7 900	0,45	1,5	2,24	1,47	790	1 190	520
1 760	4 300	0,39	1,71	2,54	1,67	440	1 330	630
1 760	4 300	0,39	1,71	2,54	1,67	440	1 330	630
2 600	5 700	0,43	1,55	2,31	1,52	580	1 260	600
2 600	5 700	0,43	1,55	2,31	1,52	580	1 260	600
1 810	4 550	0,42	1,62	2,42	1,59	460	1 260	590
1 810	4 550	0,42	1,62	2,42	1,59	460	1 260	590
2 700	6 100	0,46	1,47	2,19	1,44	610	1 190	580
2 700	6 100	0,46	1,47	2,19	1,44	610	1 190	580
1 850	4 750	0,44	1,54	2,3	1,51	475	1 190	550
1 850	4 750	0,44	1,54	2,3	1,51	475	1 190	550



FAG

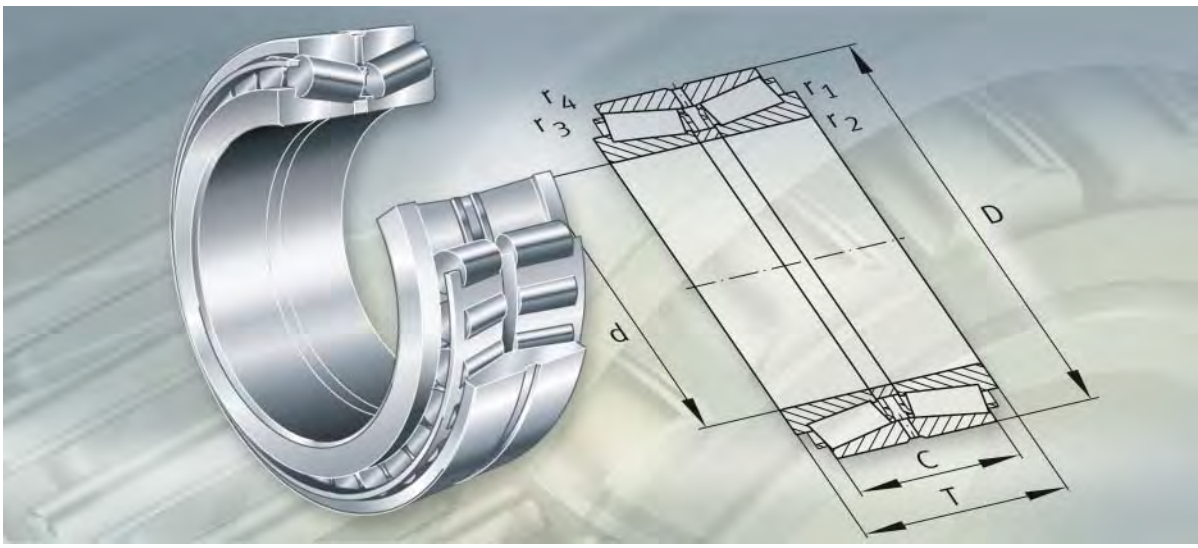

Double row tapered roller bearings

Double row tapered roller bearings

		Page
Product overview	Double row tapered roller bearings	522
Features	Bearings with two outer rings (X arrangement) for loose fit on the roll journal	523
	Bearings with two outer rings (X arrangement) and extended inner ring	524
	Bearings with two inner rings (O arrangement)	524
	Bearings with large contact angle (axial bearings)	526
	Sealing	528
	Lubrication	528
	Operating temperature	528
	Cages	528
Design and safety guidelines	Equivalent dynamic bearing load	529
	Equivalent static bearing load	530
	Minimum radial load	530
	Comparative load ratings	530
	Design of bearing arrangements	531
Accuracy	Axial internal clearance	532
Dimension tables	Tapered roller bearings, double row, in X arrangement, for loose fit on the roll journal	534
	Tapered roller bearings, double row, in X arrangement, with two outer rings and extended inner ring	538
	Tapered roller bearings, double row, in O arrangement	540
	Tapered roller bearings, double row, in O arrangement, inch sizes	546
	Tapered roller bearings, double row, in X arrangement, with large contact angle, axial bearings for work rolls	552
	Tapered roller bearings, double row, in X arrangement, with large contact angle, axial bearings for oil film bearings	554



With two outer rings (X arrangement)

For loose fit on the journal

With extended inner ring

Z-5..TR2-06, F-8..TR2-06

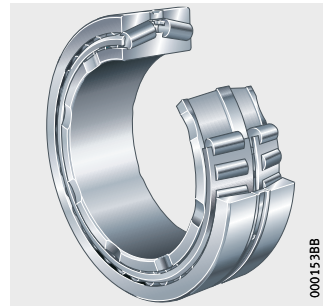

Z-5..TR2-03, F-8..TR2-03

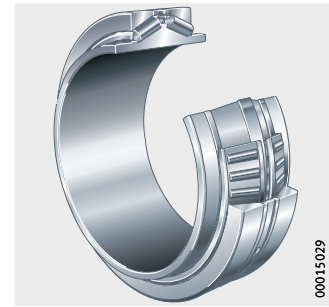

With two inner rings (O arrangement)

With intermediate ring

Without intermediate ring

Z-5..TR2-05, F-8..TR2-05

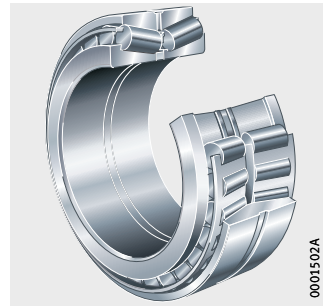

Z-5..TR2-04, F-8..TR2-04

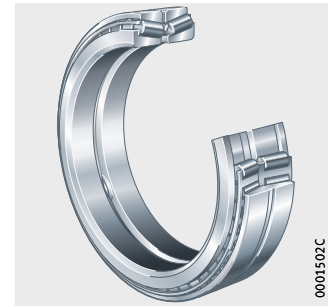

With large contact angle (X arrangement)

Axial bearings for work rolls

Axial bearings for oil film bearings

Z-5..TR2-01, F-8..TR2-01

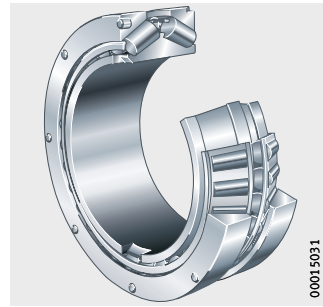

Z-5..TR2-02, F-8..TR2-02

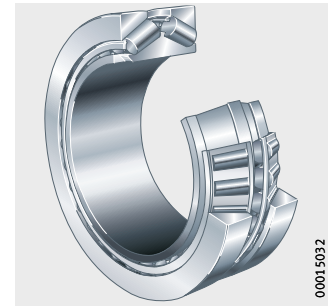

Double row tapered roller bearings

Features

Double row tapered roller bearings of various designs are special bearings with the designation Z-5..TR2 or F-8..TR2. They comprise solid bearing rings and tapered roller and cage assemblies.
The bearings are suitable for axial loads in both directions and high radial loads. Most of the bearings are separable and give a loose fit on the journal. The complete bearing is then mounted in the chock, after which the chock together with the bearing is slid onto the journal. The exception is bearings with an extended inner ring and tapered bore. These give a tight fit on the journal.

Bearings with two outer rings (X arrangement) for a loose fit on the journal

In bearings with two outer rings and one inner ring, the rows of rollers are in an X arrangement. The outer intermediate ring with a lubrication groove and lubrication holes defines the axial internal clearance suitable for the specific application.
Application: for example in roll stands, *Figure 1*.

Design 1
- Bearings with cylindrical bore for loose fit on the journal.
- Cages made from sheet steel
- Main dimensions and tolerances in inches.

Design 2
- Bearings with cylindrical bore for loose fit on the journal.
- Cages made from sheet steel
- Main dimensions and tolerances in inches.
- Helical groove in the inner ring for improved journal lubrication.

Design 3
- Bearings with cylindrical bore for loose fit on the journal.
- Through-drilled rollers and pin cages for very high loads.
- Main dimensions and tolerances in inches.

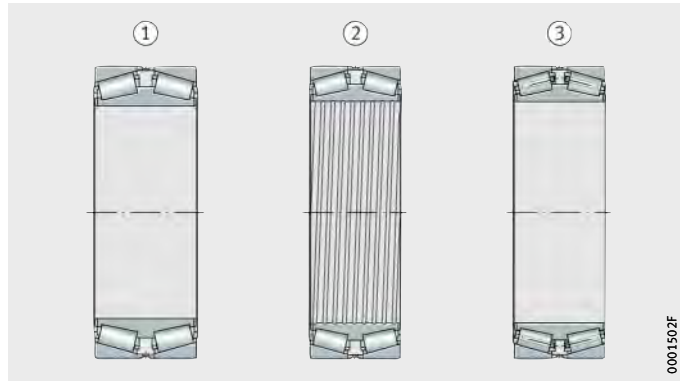

① Design 1
② Design 2
③ Design 3

Figure 1
Double row tapered roller bearings with two outer rings for loose fit on the journal

Bearings with two outer rings (X arrangement) and extended inner ring

These double row tapered roller bearings also have two outer rings. The lateral extended sections of the inner ring are ground on the outside and serve as running surfaces for rotary shaft seals. Application: for example in roll stands, *Figure 2*.

Design 4

- Bearings with cylindrical bore for loose fit on the roll journal.
- Cages made from sheet steel
- Metric or inch sizes and tolerances.

Design 5

- Bearings with tapered bore (taper 1:12 or 1:30) for tight fit on the roll journal.
- Cages made from sheet steel
- Metric or inch sizes and tolerances.

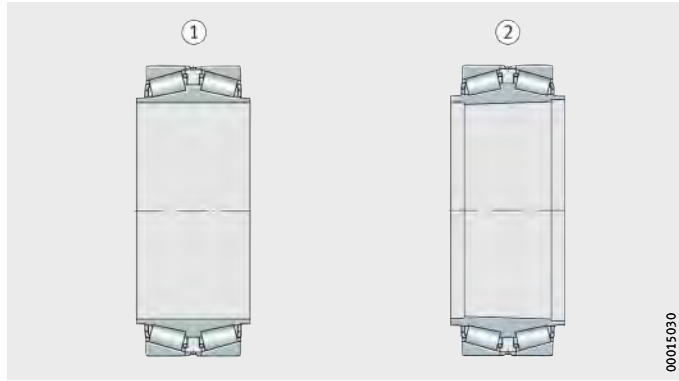

① Design 4
② Design 5

Figure 2
Double row tapered roller bearings with two outer rings and extended inner ring

Bearings with two inner rings (O arrangement)

In tapered roller bearings with two inner rings and one outer ring, the two rows of rollers are in an O arrangement.
As a result, these bearings are also suitable for tilting moments. If the bearings are used as non-locating bearings, the outer ring must have a loose fit. Normally, an inner intermediate ring defines the axial internal clearance suitable for the specific application.
The main dimensions and tolerances are metric or in inches.
Application: for example in roll stands, *Figure 3*, page 525.

Design 6

- Bearings with sheet steel cages and inner intermediate ring.
- Lubrication groove and lubrication holes in the outer ring.

Design 7

- Bearings with sheet steel cages and inner intermediate ring.
- Lubrication groove and lubrication holes as well as retaining hole in the outer ring.

Design 8
- Bearings with pin cages and inner intermediate ring.
- Lubrication groove and lubrication holes in the outer ring.

Design 9
- Bearings with pin cages and inner intermediate ring.
- Lubrication groove and lubrication holes as well as retaining hole in the outer ring.

Design 10
- Bearings without intermediate ring, with lubrication hole at the joint between the two inner rings.
- Cages made from sheet steel
- Application:
  – for example cable sheaves in drilling towers (additional lubrication groove and lubrication holes in the outer ring), vertical roll stands (preloaded bearings with rings and rollers made from case hardening steel).

Design 11
- Bearings with lubrication groove and lubrication holes in the intermediate ring.
- Cages made from sheet steel
- Preloaded special bearings for vertical rolls in universal roll stands with rings and rollers made from case hardening steel.

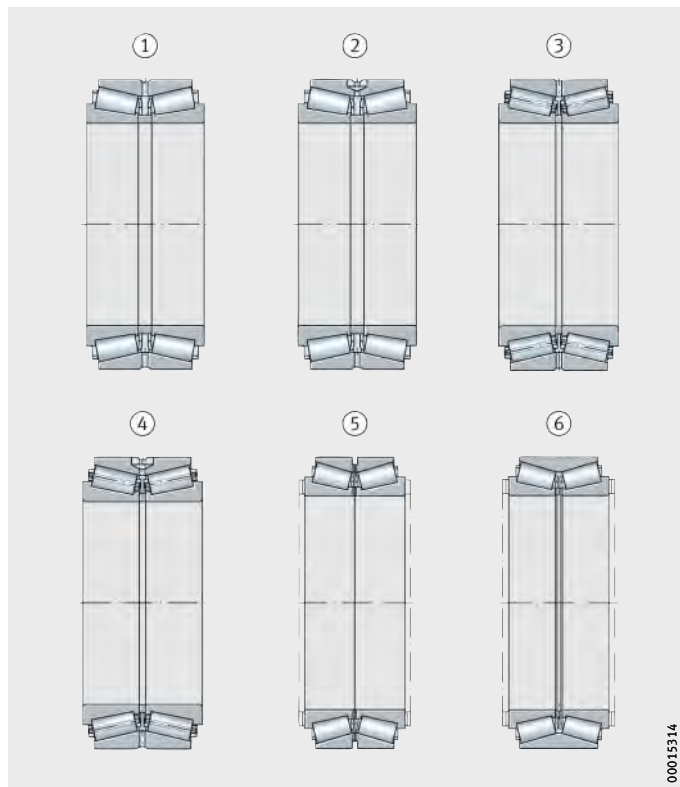

① Design 6
② Design 7
③ Design 8
④ Design 9
⑤ Design 10
⑥ Design 11

Figure 3
Double row tapered roller bearings with two inner rings

Bearings with large contact angle

Axial bearings for work rolls

Tapered roller bearings with two outer rings and a large contact angle are suitable for particularly high axial loads.
They are therefore used as axial bearings.

Designs 12 to 14 in metric or inch sizes are intended for work rolls, *Figure 4*.

Integrated springs or a retaining sleeve are used to give acceptable rolling behaviour.

Design 12
- Bearings with sheet steel cages.
- Spring assemblies integrated in the outer rings.
- Retaining slot on one side of the inner ring.

Design 13
- Bearings with sheet steel cages.
- Self-retaining design with outer retaining sleeve.
- Retaining slot on one side of the inner ring.

Design 14
- Bearings with sheet steel cages.
- Seal carrier with springs and rotary shaft seal on both sides.
- Retaining slot on one side of the inner ring.

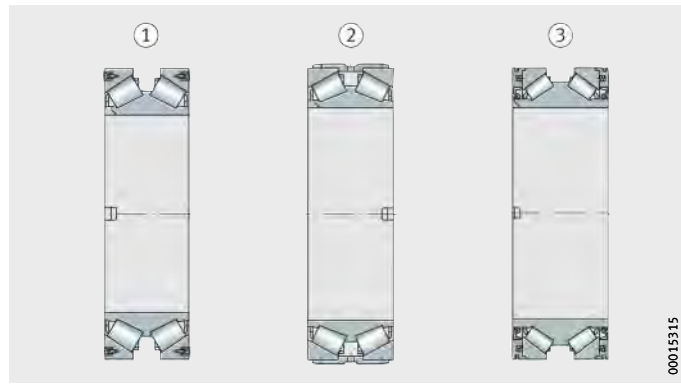

① Design 12
② Design 13
③ Design 14

Figure 4
Double row tapered roller bearings with large contact angle (axial bearings for work rolls)

Axial bearings for oil film bearings

In axial bearings for oil film bearings (Designs 15 to 19), the outer rings are axially adjusted by means of external springs to give acceptable rolling behaviour. Since the bearings are seated on the roll journal with a loose fit, the inner ring has various retaining slots depending on the bearing design to act as anti-rotation devices.
Bearings are available in metric and inch sizes, *Figure 5*.

Design 15
- Bearings with sheet steel cages
- Retaining slot on one side of the inner ring.

Design 16
- Bearings with pin cages.
- Retaining slots on both sides of the inner ring.

Design 17
- Bearings with sheet steel cages
- Retaining slot on one side of the inner ring.

Design 18
- Bearings with pin cages.
- Retaining slot on one side of the inner ring.

Design 19
- Bearings with sheet steel cages
- Axial retaining slot in the inner ring.

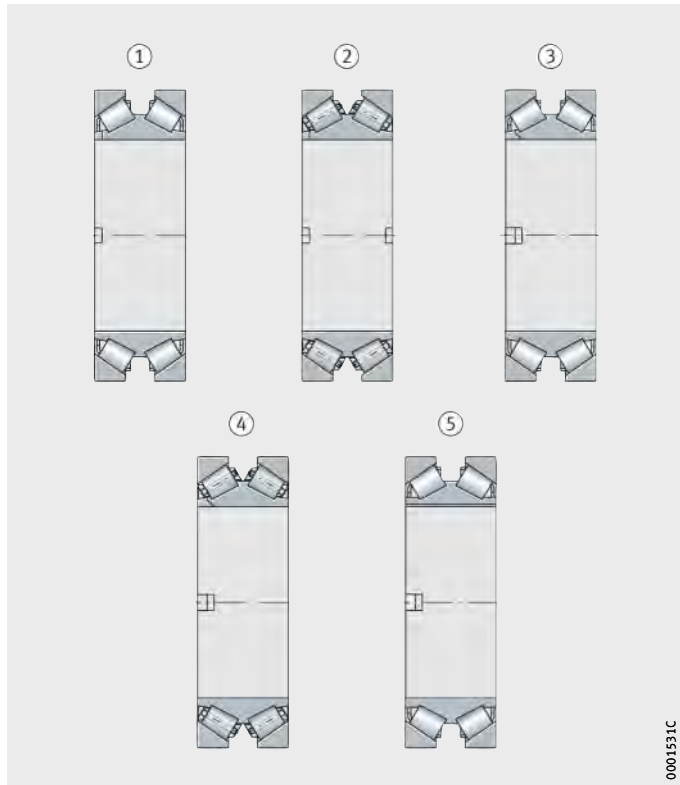

① Design 15
② Design 16
③ Design 17
④ Design 18
⑤ Design 19

Figure 5
Double row tapered roller bearings with large contact angle (axial bearings for oil film bearings)

Double row tapered roller bearings

Sealing

With the exception of Design 14 (axial bearings for work rolls), all the bearings described here are supplied without seals.

Lubrication

These open double row tapered roller bearings can be lubricated with grease or oil. The sealed bearings are supplied filled with high quality rolling bearing grease.

Operating temperature

Double row tapered roller bearings can be used at operating temperatures from –30 °C to +150 °C, depending on the lubricant.

Sealed bearings are suitable for temperatures from –30 °C to +110 °C, restricted by the lubricant and seal material.

Cages

Most double row tapered roller bearings have pressed cages made from sheet steel.

Bearings with a pin cage and through-drilled rollers are specifically identified in the dimension tables.
These bearings are designed for very high load carrying capacity and strong acceleration or deceleration.

Design and safety guidelines

Equivalent dynamic bearing load

The equivalent dynamic load P is valid for bearings that are subjected to radial and axial dynamic loads. It gives the same rating life as the combined bearing load occurring in practice.

For bearings under dynamic loading, the following applies:

Load ratio and equivalent dynamic load

Load ratio	Equivalent dynamic bearing load
$\frac{F_a}{F_r} \leqq e$	$P = F_r + Y_1 \cdot F_a$
$\frac{F_a}{F_r} > e$	$P = 0{,}67 \cdot F_r + Y_2 \cdot F_a$

P kN
Equivalent dynamic bearing load for combined load

F_a kN
Axial dynamic bearing load

F_r kN
Radial dynamic bearing load

e, Y_1, Y_2 –
Factors, see dimension tables.

Bearings under axial load with large contact angle

For bearings under purely axial load with a large contact angle, the following applies:

$$P = Y \cdot F_a$$

Y –
Factor, see dimension tables

F_a kN
Axial dynamic bearing load.



Equivalent static bearing load

The equivalent static load P_0 is valid for bearings that are subjected to radial and axial static loads. It induces the same load at the centre point of the most heavily loaded contact point between the rolling element and raceway as the combined bearing load occurring in practice.

For bearings under static loading, the following applies:

$$P_0 = F_{0r} + Y_0 \cdot F_{0a}$$

P_0 kN
Equivalent static bearing load for combined load
F_{0r} kN
Radial static bearing load
Y_0 –
Factor, see dimension tables
F_{0a} kN
Axial static bearing load.

Bearings under axial load with large contact angle

For bearings under purely axial load with a large contact angle, the following applies:

$$P_0 = Y_0 \cdot F_{0a}$$

P_0 kN
Equivalent static bearing load for combined load
Y_0 –
Factor, see dimension tables
F_{0a} kN
Axial static bearing load.

Minimum radial load

In order to ensure slippage-free operation, the bearings must be subjected to a minimum radial load. This applies particularly in the case of high speeds and high accelerations. In continuous operation, a minimum radial load of the order of $C_r/P > 0{,}02$ is therefore necessary.

Comparative load ratings

The basic dynamic load ratings C_r to DIN ISO 281 are based on a basic rating life of 1 million revolutions. Competitors sometimes give different load ratings that are based on 90 million revolutions (3 000 h at 500 min^{-1}).
Since it is not possible to compare these values with the basic load ratings calculated according to ISO, please contact us regarding the comparative load ratings C_{r90} and C_{a90}.

Shaft tolerances

Double row tapered roller bearings	Nominal dimension d mm	Tolerance[1] mm
Metric tolerances, with loose fit	< 315	–0,180...–0,230
	315 ...630	–0,240...–0,300
	> 630 ...800	–0,325...–0,410
	> 800	–0,350...–0,450
Inch tolerances, with loose fit	> 152,4...203,2	–0,150...–0,175
	> 203,2...304,8	–0,180...–0,205
	> 304,8...609,6	–0,200...–0,249
	> 609,6...914,4	–0,250...–0,334
	> 914,4	–0,300...–0,400
Axial bearings	d	e7

[1] In the case of high speeds and bearings with a tapered bore, please contact us to discuss the tolerances for the adjacent parts.

Housing tolerances

Double row tapered roller bearings	Nominal dimension D mm	Tolerance[1] mm
Metric tolerances	≦ 800	H6
	> 800	H7
Inch tolerances	> 304,8... 609,6	+0,101...+0,150
	> 609,6... 914,4	+0,156...+0,230
	> 914,4... 1219,2	+0,202...+0,300
	> 1219,6	+0,257...+0,380
Axial bearings	≦ 500	+0,6 ...+0,8
	> 500 ... 800	+0,8 ...+1,1
	> 800	+1,2 ...+1,5

[1] In the case of high axial forces and bearings with a tapered bore, please contact us to discuss the tolerances for the adjacent parts.



Accuracy

The dimensional and running tolerances of double row tapered roller bearings are generally defined for individual cases.
Please contact us regarding the values.
Normal tolerances for bearings in metric and inch sizes should be taken from the following tables.

Normal tolerances for bearings in metric sizes

Nominal dimension mm		Bore deviation Δ_{dmp} µm		Outside diameter deviation Δ_{Dmp} µm		Width deviation $\Delta_{Bs} = \Delta_{Cs}$ µm	
over	incl.	max.	min.	max.	min.	max.	min.
180	250	0	−30	0	−30	0	−300
250	315	0	−35	0	−35	0	−350
315	400	0	−40	0	−40	0	−400
400	500	0	−45	0	−45	0	−450
500	630	0	−50	0	−50	0	−500
630	800	0	−75	0	−75	0	−750
800	1000	0	−100	0	−100	0	−1000
1000	1250	0	−125	0	−125	0	−1250
1250	1600	0	−160	0	−160	0	−1600
1600	2000	0	−200	0	−200	0	−2000

Normal tolerances for bearings in inch sizes

Nominal dimension mm		Bore deviation Δ_{dmp} µm		Outside diameter deviation Δ_{Dmp} µm		Width deviation $\Delta_{Bs} = \Delta_{Cs}$ µm	
over	incl.	max.	min.	max.	min.	max.	min.
304,8	609,6	+51	0	+51	0	±762	0
609,6	914,4	+76	0	+76	0	±762	0
914,4	1219,2	+102	0	+102	0	±762	0
1219,2	–	+127	0	+127	0	±762	0

Axial internal clearance

The axial internal clearance of double row tapered roller bearings differs according to the bearing size and application.
Please contact us for values.



Tapered roller bearings

Double row,
X arrangement
For loose fit
on the roll journal

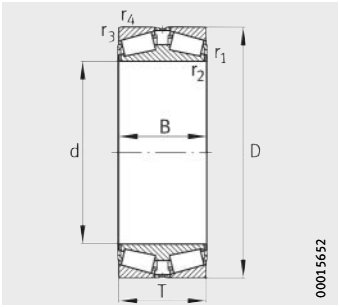

Design 1

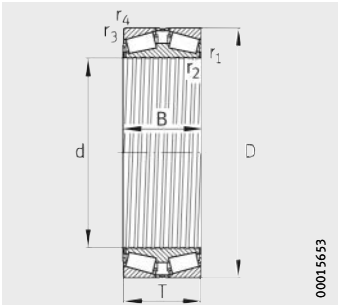

Design 2

Dimension table · Dimensions in mm

Designation	Design	Mass	Dimensions					
		m	d	D	T	B	r_1, r_2	r_3, r_4
		≈kg					min.	min.
Z-541397.TR2	1	77,1	**203,2**	368,3	158,75	152,4	3,3	3,3
F-800579.TR2	1	24,7	**234,95**	327,025	93,662	93,662	3,3	3,3
Z-564290.TR2	1	67,8	**2 44,475**	381	146,05	146,05	3,3	4,8
Z-511577.TR2	1	41,6	**254**	358,775	130,175	130,175	1,5	3,3
Z-547757.TR2	1	104	**254**	438,15	165,1	165,1	3,3	6,4
Z-505684.TR2	1	89,7	**254**	444,5	133,35	133,35	3,3	6,4
Z-517563.01.TR2	1	50,2	**269,875**	381	136,525	136,525	3,3	3,3
Z-564144.TR2	1	129	**279,4**	469,9	169,863	166,688	3,3	6,4
Z-546348.TR2	1	59,5	**288,925**	406,4	144,462	144,462	3,3	3,3
Z-542664.TR2	1	67,8	**300,038**	422,275	150,813	150,812	3,3	3,3
Z-572151.TR2	1	55,2	**304,8**	419,1	130,175	130,175	1,5	6,4
Z-575744.TR2	1	68	**305**	438,048	133,35	134,938	3,3	4,8
Z-510687.01.TR2	1	92	**333,375**	469,9	166,688	166,688	3,3	3,3
Z-515956.TR2	1	112	**342,9**	533,4	139,69	146,05	3,3	3,3
Z-575296.TR2	2	106	**346,075**	488,95	174,625	174,625	3,3	3,3
Z-518240.01.TR2	2	150	**384,175**	546,1	193,675	193,675	3,3	6,4
Z-533805.TR2	3	150	**384,175**	546,1	193,675	193,675	3,3	6,4
F-804701.TR2	2	89	**406,4**	546,1	138,112	138,112	1,5	6,4
Z-531821.TR2	1	145	**406,4**	565,15	184,15	184,15	3,3	6,4
Z-525090.TR2	1	115	**409,575**	546,1	161,925	161,925	1,5	6,4
Z-524903.TR2	1	184	**415,925**	590,55	209,55	209,55	3,3	6,4
Z-528949.TR2	1	474	**431,902**	685,698	330,2	330,2	6,4	6,4
Z-518667.TR2	1	222	**447,675**	635	223,838	223,838	3,3	6,4
Z-515087.01.TR2	1	281	**479,425**	679,45	238,125	238,125	3,3	6,4
Z-503772.TR2	2	320	**501,65**	711,2	250,825	250,825	3,3	6,4
Z-536245.TR2	1	351	**508**	762	219,075	219,075	6,4	6,4
Z-532273.TR2	3	610	**520**	820	300	300	4	6
Z-526165.TR2	2	392	**536,575**	761,873	269,875	269,875	3,3	6,4
Z-544145.TR2	1	228	**558,8**	736,6	196,85	196,85	3,3	6,4
Z-543718.TR2	3	505	**571,5**	812,8	285,75	285,75	3,3	6,4

[1] The comparative designations were taken from documents available to us.
They give information on identical main dimensions and chamfer dimensions only.
The cage and bearing designs are not always identical.
Furthermore, the table makes no claims to completeness.

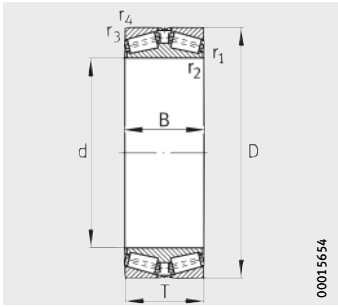

Design 3
With pin cage

Basic load ratings		Calculation factors				Fatigue limit load	Interchange designation[1)]
dyn. C_r kN	stat. C_{0r} kN	e	Y_1	Y_2	Y_0	C_{ur} kN	TDI types
1 690	3 450	0,39	1,71	2,54	1,67	375	EE420800DW.450
830	1 960	0,41	1,66	2,47	1,62	–	85 76D W.8 520
1 600	3 500	0,46	1,46	2,17	1,43	370	EE126096DW.150
1 360	3 150	0,34	1,98	2,95	1,94	335	M249749DW.710
2 170	4 100	0,36	1,87	2,78	1,83	415	EE738101DW.712
1 710	3 050	0,36	1,85	2,76	1,81	305	EE822101DW.175
1 550	3 700	0,33	2,03	3,02	1,99	390	M252349DW.310
2 400	5 100	0,37	1,8	2,69	1,76	–	EE722111DW.185
1 730	4 100	0,35	1,94	2,89	1,9	430	M255449DW.410
1 790	4 350	0,36	1,86	2,77	1,82	450	HM256849DW.810
1 560	3 800	0,32	2,12	3,15	2,07	–	M257149DW.110
1 340	3 200	0,4	1,69	2,52	1,65	–	EE129123DW.172
2 120	5 400	0,38	1,79	2,67	1,75	540	HM261049DW.010
2 120	3 900	0,33	2,03	3,02	1,98	–	EE971355DW.100
2 480	6 300	0,33	2,03	3,02	1,98	620	HM262749DW.710
3 050	7 900	0,33	2,03	3,02	1,98	750	HM266449DW.410
3 050	7 900	0,33	2,03	3,02	1,98	750	HM266449D.410
1 910	4 650	0,43	1,56	2,33	1,53	435	LM767749DW.710
3 000	7 500	0,43	1,57	2,34	1,53	–	M267949DW.910
2 240	6 200	0,45	1,5	2,24	1,47	–	M667947DW.911
3 400	8 300	0,34	1,98	2,94	1,93	770	M268749DW.710
6 700	15 000	0,32	2,12	3,15	2,07	–	EE650171D.270
4 900	10 400	0,33	2,07	3,09	2,03	940	M270749DW.710
4 700	12 200	0,33	2,03	3,02	1,98	1 090	M272749DW.710
4 900	12 800	0,35	1,92	2,86	1,88	1 130	M274149DW.110
4 500	10 200	0,39	1,73	2,58	1,69	870	EE531201DW.300
7 600	17 300	0,4	1,68	2,5	1,64	1 440	–
5 900	15 000	0,3	2,28	3,39	2,23	1 290	M276449DW.410
3 900	10 800	0,35	1,95	2,9	1,91	–	LM377449.410
6 900	18 100	0,33	2,03	3,02	1,98	1 530	M278749DW.710



Tapered roller bearings

Double row,
X arrangement
For loose fit
on the roll journal

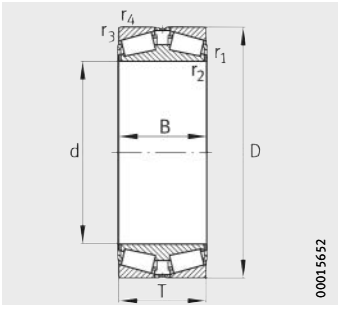

Design 1

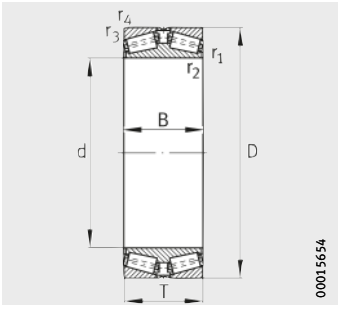

Design 3
With pin cage

Dimension table (continued) · Dimensions in mm

Designation	Design	Mass	Dimensions					
		m	d	D	T	B	r_1, r_2	r_3, r_4
		≈kg					min.	min.
Z-538086.TR2	1	267	**609,6**	820	171,45	171,45	3,3	6,4
F-804575.TR2	1	709	**635**	939,8	304,8	304,8	3,3	6,4
F-800501.TR2	3	746	**635**	939,8	304,8	304,8	3,3	6,4
Z-515897.01.TR2	3	735	**657,225**	933,45	328,613	328,613	3,3	6,4
Z-568023.TR2	3	828	**682,625**	965,2	338,138	338,138	3,3	6,4
Z-532828.TR2	3[1)]	320	**710**	900	197	197	3,3	6,4
Z-518933.TR2	1	253	**711,2**	914,4	149,225	149,225	3,3	6,4
Z-524770.TR2	3	1 440	**825,5**	1 168,4	409,575	409,575	4,8	12,7
Z-539945.TR2	3[2)]	2 000	**901,7**	1 295,4	450,85	438,15	4,8	12,7
Z-521872.TR2	3	2 030	**939,8**	1 333,5	463,55	463,55	4,8	12,7

1) Bearing with helical grooves in the inner ring bore.

2) Bearing with lubrication holes through the central rib of the inner ring.

3) The comparative designations were taken from documents available to us.
They give information on identical main dimensions and chamfer dimensions only.
The cage and bearing designs are not always identical.
Furthermore, the table makes no claims to completeness.

Basic load ratings		Calculation factors				Fatigue limit load	Interchange designation[3)]
dyn. C_r kN	stat. C_{0r} kN	e	Y_1	Y_2	Y_0	C_{ur} kN	TDI types
3 300	9 300	0,48	1,39	2,07	1,36	770	–
6 400	15 300	0,56	1,2	1,79	1,18	–	–
6 800	16 800	0,56	1,2	1,79	1,18	1 350	–
8 900	23 700	0,33	2,03	3,02	1,98	1 920	M281649D.610
9 000	25 500	0,33	2,03	3,02	1,98	2 050	M282249DW.210
4 550	13 500	0,35	1,95	2,9	1,91	1 090	SKF 331581A
3 400	9 500	0,38	1,77	2,63	1,73	750	EE755281D.360
12 800	36 500	0,34	2	2,98	1,96	2 750	M285848D.810
16 000	43 000	0,32	2,12	3,15	2,07	3 150	EE634356D.510
16 000	45 000	0,33	2,03	3,02	1,98	–	LM287849DW.810



Tapered roller bearings

Double row,
X arrangement
With two outer rings and extended inner ring

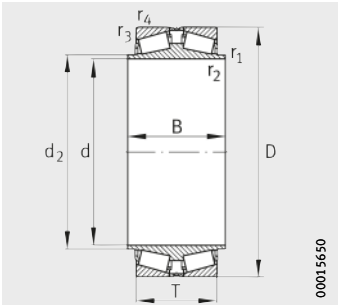

Design 4
Cylindrical bore

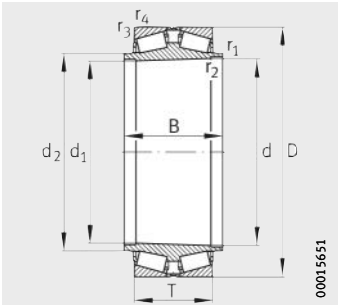

Design 5
Tapered bore taper 1:12

Dimension table · Dimensions in mm

Designation	Design	Mass	Dimensions					
		m	d	d_1	D	T	B	r_1, r_2
		≈kg						min.
Z-535082.TR2	5	70	**208,89**	188,517	336,55	180,975	244,475	1,5
Z-539084.TR2	5	58	**219,605**	206,243	336,55	160,34	223,83	1,5
Z-548244.TR2	4	51,3	**220**	–	340	140	200	1,5
Z-564232.TR2	5[1)]	55	**220**	215,333	340	140	200	1,5
Z-542129.TR2	5	70,4	**220,13**	205,049	336,55	180,975	244,475	1,5
Z-539574.TR2	5	77	**230**	216,658	370	160	223,5	3
Z-535081.TR2	4	52,5	**269,875**	–	381	136,525	196,85	3,3
Z-542146.TR2	5	56	**272,39**	255,985	381	136,525	196,85	1,5
Z-544753.TR2	5	170	**280**	261,666	460	220	280	1
Z-548243.TR2	4	74	**288,925**	–	406,4	165,1	234,95	1,5
Z-564231.TR2	5[1)]	76	**288,925**	283,422	406,4	165,1	234,95	1,5
Z-539576.TR2	5	92	**317,5**	304,271	447,675	159,512	222,25	3,3
F-803981.TR2	4[2)]	117	**325**	–	469,9	182,563	247,65	1,5
Z-548242.TR2	4	100	**333,375**	–	469,9	166,688	231,775	1,5
Z-564230.TR2	5[1)]	102	**333,375**	327,819	469,9	166,688	231,775	1,5
Z-541965.TR2	5	115	**333,375**	318,161	469,9	182,563	247,65	1,5
Z-544754.TR2	5	228	**340**	321,666	520	220	280	1

1) With tapered bore, taper 1:30.

2) With helical grooves in the inner ring bore.

		Basic load ratings		Calculation factors				Fatigue limit load
r_3, r_4	d_2	dyn. C_r	stat. C_{0r}	e	Y_1	Y_2	Y_0	C_{ur}
min.		kN	kN					kN
3,3	228,6	1 920	4 000	0,34	2	2,98	1,96	445
3	241,3	1 680	3 600	0,35	1,95	2,9	1,91	395
4	244,5	1 530	3 250	0,43	1,57	2,34	1,53	355
4	241,3	1 530	3 250	0,43	1,57	2,34	1,53	355
3,3	242	1 860	4 200	0,35	1,95	2,9	1,91	465
3	260,35	1 820	3 700	0,39	1,71	2,55	1,67	395
3,3	292,1	1 550	3 700	0,33	2,03	3,02	1,99	390
3,3	292,1	1 550	3 700	0,33	2,03	3,02	1,99	390
6	311,15	3 150	6 300	0,35	1,93	2,87	1,88	640
3,3	307,975	2 000	4 750	0,33	2,06	3,07	2,02	495
3,3	307,975	2 000	4 750	0,33	2,06	3,07	2,02	495
3,3	342,9	2 070	5 200	0,33	2,03	3,02	1,98	520
3,3	355,6	2 550	6 400	0,32	2,12	3,15	2,07	–
3,3	355,6	2 120	5 400	0,38	1,79	2,67	1,75	540
3,3	355,6	2 120	5 400	0,38	1,79	2,67	1,75	540
3,3	361,9	2 550	6 400	0,32	2,12	3,15	2,07	–
6	371,475	3 350	7 200	0,4	1,67	2,49	1,63	–



Tapered roller bearings

Double row,
O arrangement

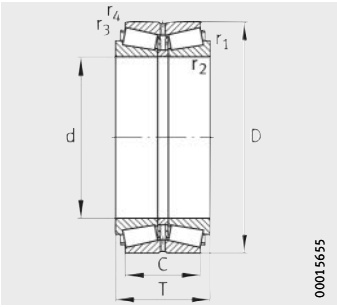

Design 6

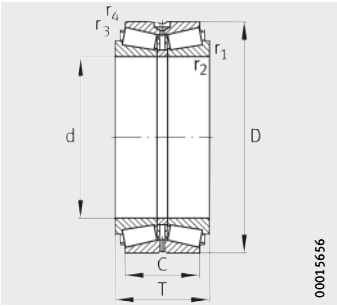

Design 7

Dimension table · Dimensions in mm

Designation	Design	Mass	Dimensions						
		m	d	D	T	B	C	r_1, r_2	r_3, r_4
		≈kg						min.	min.
Z-543034.TR2	10	77	**165,1**	336,55	194,15	–	149,7	3,3	3,3
Z-577350.TR2	6	49,6	**190**	320	172	–	134	4	1,5
Z-511982.TR2	6	61,1	**200**	340	184	–	150	4	1,5
F-800116.TR2	10	63,6	**200**	360	218	–	174	5	1,5
Z-577083.TR2	10	110	**203,2**	393,7	212	–	171,45	3	1,5
Z-567227.TR2	11	72	**206,375**	336,55	211,138	–	169,863	3,3	1,5
Z-566204.TR2	10	48,6	**220**	340	154	–	120	4	1,5
Z-511984.TR2	7	51,7	**220**	340	165	–	130	4	1,5
Z-548864.TR2	10	60	**220**	340	196	–	160	3	1,5
Z-580871.TR2	6	79,7	**220**	370	200	–	166	5	1,5
Z-573103.TR2	10	93,2	**220**	370	225	–	184	3	1,5
Z-541910.TR2	7	48,7	**230**	355	145	–	110	6	2,5
Z-568648.TR2	6	22,3	**240**	320	110	–	87	3	1
Z-511985.TR2	7	58,5	**240**	360	165	–	130	3	1
Z-511983.TR2	6	100	**240**	400	210	–	168	5	1,5
Z-566443.01.TR2	11[1)2)]	174	**240**	440	268	278	200	5	4
F-803101.TR2	11	101	**242**	406	206	–	160	6	1,5
Z-543185.01.TR2	11[1)2)]	102	**242**	406	206	216	150	6	5
Z-543325.01.TR2	11[1)]	102	**242**	406	206	216	160	6	1,5
Z-564234.TR2	10[1)]	102	**242**	406	206	216	162	5	1,5
Z-576107.TR2	10	158	**255**	440	265	–	214	3	1,5
Z-511987.TR2	6	37,8	**260**	360	134	–	108	3	1
Z-514164.TR2	6	60,9	**260**	400	150	–	110	6	2,5
Z-511988.TR2	7	81	**260**	400	186	–	146	5	3
Z-579708.TR2	10[1)]	84	**260**	400	194	204	150	3	1,5
Z-577881.TR2	10	84	**260**	400	196	–	160	3	1,5
Z-539099.TR2	7	93,5	**260**	430	180	–	130	10	2,5
Z-511989.TR2	6	129	**260**	440	225	–	180	4	1
Z-564747.TR2	11[1)2)]	220	**260**	480	282	292	212	6	5
Z-564746.TR2	10[1)]	218	**260**	480	282	292	440	6	1,5
Z-565251.TR2	11[1)]	219	**260**	480	284	294	220	6	1,5
Z-573594.TR2	11[1)]	220	**260**	480,5	284	294	220	6	1,5
Z-538180.TR2	6	85,2	**280**	420	189	–	154	5	2
F-800117.TR2	10	231	**280**	500	284	–	222	6	2

1) Spacer ring on both sides.

2) Two outer rings with intermediate ring.

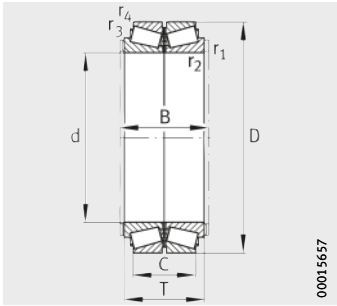

Design 10

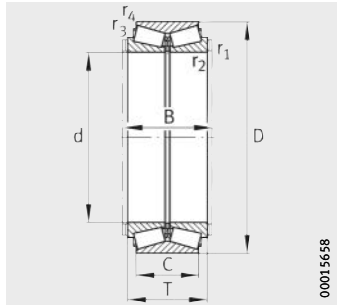

Design 11

Basic load ratings		Calculation factors				Fatigue limit load
dyn. C_r kN	stat. C_{0r} kN	e	Y_1	Y_2	Y_0	C_{ur} kN
1 930	3 100	0,32	2,12	3,15	2,07	–
1 480	2 800	0,36	1,9	2,83	1,86	315
1 710	3 150	0,26	2,55	3,8	2,5	350
2 240	4 150	0,41	1,66	2,47	1,62	–
2 270	3 950	0,35	1,95	2,9	1,91	415
1 920	4 000	0,34	2	2,98	1,96	445
1 460	3 100	0,43	1,57	2,34	1,53	–
1 530	3 250	0,43	1,57	2,34	1,53	355
1 800	3 900	0,35	1,95	2,9	1,91	–
1 930	3 750	0,24	2,84	4,22	2,77	405
2 440	4 900	0,35	1,95	2,9	1,91	530
1 320	2 650	0,33	2,05	3,05	2	285
880	2 030	0,29	2,33	3,47	2,28	223
1 470	3 350	0,31	2,2	3,27	2,15	365
770	1 790	0,37	1,81	2,7	1,77	200
3 300	6 500	0,44	1,55	2,31	1,52	670
2 320	4 700	0,37	1,81	2,7	1,77	495
2 320	4 700	0,37	1,81	2,7	1,77	495
2 320	4 700	0,37	1,81	2,7	1,77	495
2 320	4 650	0,37	1,81	2,7	1,77	–
3 250	6 600	0,35	1,95	2,9	1,91	680
1 280	3 000	0,41	1,66	2,47	1,62	320
1 220	2 500	0,44	1,53	2,28	1,5	265
1 980	4 300	0,43	1,55	2,31	1,52	450
1 920	4 200	0,43	1,55	2,31	1,52	440
2 160	4 650	0,35	1,95	2,9	1,91	485
1 870	3 550	0,33	2,02	3	1,97	360
2 850	5 500	0,28	2,41	3,59	2,36	560
3 800	7 500	0,43	1,57	2,34	1,53	–
3 850	7 600	0,43	1,57	2,34	1,53	760
3 800	7 500	0,43	1,57	2,34	1,53	–
3 800	7 500	0,43	1,57	2,34	1,53	–
2 050	4 600	0,46	1,47	2,19	1,44	475
3 900	7 800	0,45	1,5	2,24	1,47	–



Tapered roller bearings

Double row,
O arrangement

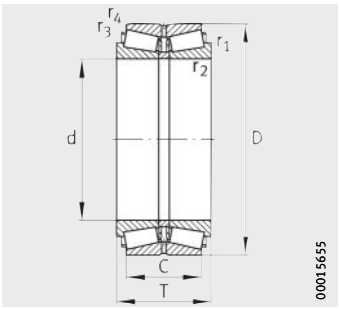

Design 6

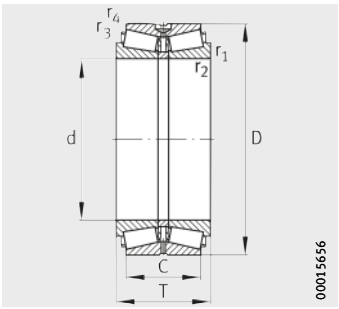

Design 7

Dimension table (continued) · Dimensions in mm

Designation	Design	Mass	Dimensions					
		m	d	D	T	C	r_1, r_2	r_3, r_4
		≈kg					min.	min.
Z-511990.TR2	7	63,8	**300**	420	159	128	4	1
Z-565735.TR2	6	121	**300**	500	180	125	9,5	2,5
Z-511991.TR2	7	145	**300**	500	205	152	6	2,5
Z-532655.TR2	6	72,6	**340**	460	160	128	4	1,5
Z-549929.TR2	6	126	**340**	520	180	135	6	2
Z-511992.TR2	6	228	**340**	580	242	170	6	2
Z-541911.TR2	7	208	**350**	590	200	140	12	2,5
Z-511993.TR2	7	73,3	**360**	480	160	128	4	1,5
Z-525858.TR2	6	135	**360**	540	185	140	5	1,5
Z-566764.TR2	10[1)]	540	**367,5**	647,7	410	336	4,8	3,3
Z-566765.TR2	11[1)]	540	**367,5**	647,7	410	336	4,8	3,2
Z-538179.TR2	7	86,4	**380**	520	149	112	5	2
Z-511994.TR2	6	244	**380**	620	242	170	5	2
F-808453.TR2	7	236	**381**	590,55	245	190	6,4	1,5
Z-565736.TR2	6	146	**400**	590	185	125	6	2,5
Z-511995.TR2	7	183	**400**	600	206	150	6	2
Z-549965.TR2	7	192	**420**	620	206	150	6	5
Z-511996.TR2	7	365	**420**	700	275	200	6	2
Z-511997.TR2	7	219	**440**	650	212	152	8	3
Z-579097.TR2	11[1)]	244	**447,675**	635	257,175	206,375	6,4	1,5
Z-549964.TR2	7	135	**460**	620	170	131	5	4
Z-534866.TR2	7	255	**460**	680	230	175	7,5	3
Z-511998.TR2	7	152	**480**	650	180	130	5	2
Z-573216.TR2	10[1)]	255	**480**	680	238	190	4	3
Z-541912.TR2	7	141	**490**	640	180	144	9,5	3
Z-539031.TR2	7	162	**500**	670	180	130	5	2
Z-544199.TR2	6	281	**500**	720	236	180	7,5	3
Z-539117.TR2	7	225	**520**	740	190	120	3	3
Z-510043.TR2	7	189	**530**	710	190	136	6	2,5
Z-532951.TR2	7	236	**560**	750	213	156	6	2,5
Z-578732.TR2	7	418	**560**	820	260	185	7,5	3
Z-541806.TR2	6	416	**560**	820	270	190	9,5	3

1) With pin cages.

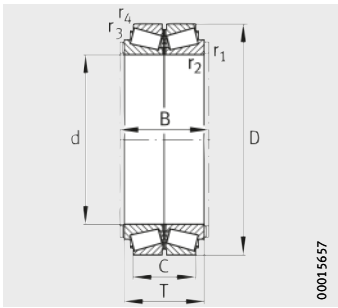

Design 10

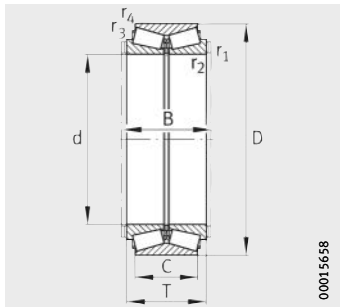

Design 11

Basic load ratings		Calculation factors				Fatigue limit load
dyn. C_r kN	stat. C_{0r} kN	e	Y_1	Y_2	Y_0	C_{ur} kN
1 560	3 850	0,32	2,12	3,15	2,07	395
2 270	4 150	0,26	2,55	3,8	2,5	400
2 700	5 300	0,37	1,8	2,69	1,76	510
1 890	4 850	0,4	1,69	2,52	1,65	485
2 270	4 850	0,31	2,21	3,28	2,16	465
3 350	6 300	0,47	1,44	2,15	1,41	590
2 850	5 400	0,56	1,2	1,79	1,18	495
1 910	4 700	0,32	2,11	3,14	2,06	460
2 550	5 500	0,3	2,25	3,35	2,2	–
7 400	16 000	0,29	2,32	3,45	2,26	1 470
7 400	16 000	0,29	2,32	3,45	2,26	1 470
1 590	3 900	0,36	1,86	2,76	1,81	370
3 650	7 100	0,46	1,47	2,19	1,44	640
3 350	8 300	0,34	1,98	2,94	1,93	–
2 550	5 300	0,33	2,05	3,05	2	480
3 000	6 600	0,46	1,45	2,16	1,42	610
2 900	6 400	0,43	1,58	2,36	1,55	580
4 700	9 200	0,42	1,6	2,38	1,56	800
3 100	6 800	0,48	1,42	2,11	1,39	610
4 300	10 600	0,33	2,07	3,09	2,03	–
2 500	6 100	0,38	1,77	2,63	1,73	550
3 850	8 800	0,31	2,18	3,24	2,13	780
2 600	6 400	0,4	1,69	2,52	1,65	570
4 150	10 600	0,32	2,12	3,15	2,07	–
2 600	6 400	0,4	1,69	2,52	1,65	570
2 600	6 600	0,41	1,63	2,43	1,6	580
4 000	9 400	0,33	2,04	3,04	2	810
2 550	5 700	0,48	1,42	2,11	1,39	480
3 100	7 900	0,41	1,65	2,45	1,61	680
3 050	8 000	0,43	1,56	2,32	1,52	680
4 750	11 400	0,49	1,38	2,05	1,35	950
4 750	11 400	0,49	1,38	2,05	1,35	950

Tapered roller bearings

Double row,
O arrangement

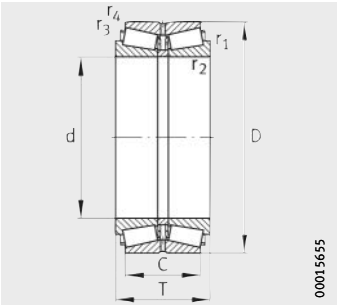

Design 6

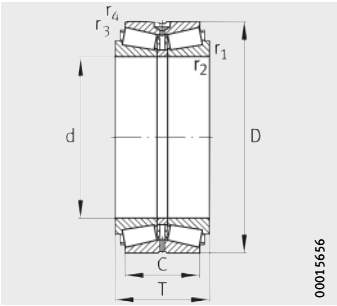

Design 7

Dimension table (continued) · Dimensions in mm

Designation	Design	Mass	Dimensions					
		m	d	D	T	C	r_1, r_2	r_3, r_4
		≈kg					min.	min.
Z-538181.TR2	7	262	**600**	800	208,5	160	6	2,5
Z-538183.TR2	7	473	**600**	870	270	198	7,5	3
Z-538182.TR2	7	293	**630**	850	242	182	7,5	2,5
Z-510041.TR2	7	422	**710**	950	240	175	7,5	3
Z-534867.TR2	6	753	**710**	1 030	315	220	9,5	4
Z-564801.TR2	7	587	**800**	1 060	270	204	6	2,5
Z-538339.TR2	7	638	**850**	1 120	268	190	7,5	3
Z-538341.TR2	7	883	**950**	1 250	298	220	9,5	4
Z-568323.TR2	6[1)]	813	**1 250**	1 500	250	190	6	1,5
Z-572139.TR2	6[1)]	1 390	**1 450**	1 770	290	170	9,5	5

[1)] With pin cages.

Basic load ratings		Calculation factors				Fatigue limit load
dyn. C_r kN	stat. C_{0r} kN	e	Y_1	Y_2	Y_0	C_{ur} kN
3 700	9 100	0,32	2,08	3,1	2,04	750
5 200	12 300	0,41	1,66	2,47	1,62	1 000
4 450	11 500	0,4	1,69	2,52	1,65	940
5 100	13 000	0,46	1,47	2,19	1,44	1 030
7 200	17 000	0,43	1,57	2,34	1,53	1 300
6 100	16 400	0,35	1,95	2,9	1,91	1 250
5 600	15 500	0,46	1,45	2,16	1,42	1 170
7 500	21 300	0,32	2,12	3,15	2,07	1 550
7 100	24 100	0,37	1,8	2,69	1,76	1 650
7 600	26 500	0,87	0,78	1,16	0,76	1 710



Tapered roller bearings

Double row,
O arrangement,
in inch sizes

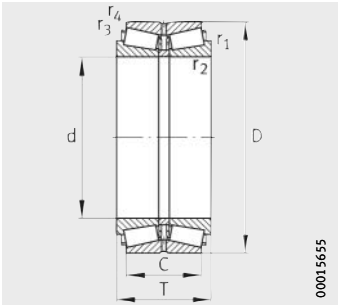

Design 6

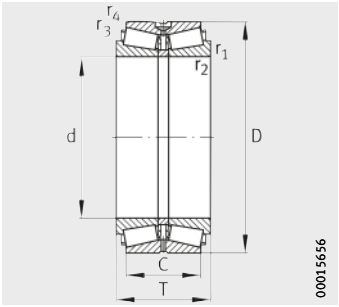

Design 7

Dimension table · Dimensions in mm

Designation	Design	Mass	Dimensions					
		m	d	D	T	C	r_1, r_2	r_3, r_4
		≈kg					min.	min.
Z-523062.TR2	7	69,8	**206,375**	336,55	211,138	169,862	3,3	1,5
Z-503656.TR2	7	50,7	**228,6**	355,6	146,05	111,125	6,8	1,5
Z-514401.TR2	6	52,8	**228,6**	355,6	152,4	114,3	6,4	1,5
Z-518468.TR2	6	53,6	**228,6**	355,6	152,4	111,125	6,9	1,5
Z-515125.TR2	7	205	**228,6**	488,95	254	152,4	6,4	1,5
Z-547139.TR2	6[2]	27,2	**234,95**	327,025	117,475	82,55	6,4	1,6
Z-547957.TR2	6[2]	27,8	**234,95**	328,625	117,475	82,55	6,4	1,5
Z-517152.TR2	6[2]	24,4	**253,975**	347,662	101,6	69,85	3,6	1,5
Z-505612.TR2	7	44,4	**254**	358,775	152,4	117,475	3,6	1,5
F-804367.TR2	8[1]	86,3	**254**	422,275	173,038	128,588	6,9	1,5
Z-515129.TR2	6	259	**254**	533,4	276,225	165,1	6,4	1,5
Z-514599.TR2	6	85,5	**260,35**	422,275	178,592	139,7	6,9	1,5
Z-535605.TR2	6[2]	25,9	**266,7**	352,425	107,95	82,55	6,4	1,5
Z-524440.01.TR2	7	42	**285,75**	380,898	139,7	107,95	3,6	1,5
Z-525830.TR2	6	139	**285,75**	501,65	203,2	120,65	6,4	3,3
Z-505614.01.TR2	7	62,6	**288,925**	406,4	165,1	130,175	6,4	1,5
Z-526864.TR2	6	71,2	**300,038**	422,275	174,625	136,525	6,4	1,5
Z-539192.TR2	6[2]	33,3	**304,8**	393,7	107,95	82,55	6,4	1,5
Z-527128.TR2	7	73,8	**304,8**	438,048	165,1	120,65	6,4	1,5
Z-512601.TR2	6	172	**311,15**	558,8	190,5	111,125	9,7	3,3
Z-521746.TR2	7	59,8	**317,5**	444,5	146,05	98,425	7,9	1,5
Z-510607.01.TR2	7	85	**317,5**	447,675	180,975	146,05	3,6	1,5
Z-515495.TR2	7	96,6	**330,2**	482,6	177,8	127	6,4	1,5
Z-526831.TR2	7	97,8	**333,375**	469,9	190,5	152,4	6,4	1,5
F-807462.TR2	8[1]	113	**346,075**	488,95	200,025	158,75	6,4	1,5
Z-505613.01.TR2	7	113	**346,075**	488,95	200,025	158,75	6,4	1,5
F-804108.TR2	8[1]	43,4	**355,6**	444,5	127	101,6	3,6	1,5
Z-523319.TR2	7	45	**355,6**	444,5	136,525	111,125	3,6	1,5
F-807283.TR2	8[1]	78,2	**355,6**	501,65	154	107,95	6,4	1,6
Z-510608.01.TR2	6	83,9	**355,6**	501,65	155,575	107,95	6,4	1,5
Z-581099.TR2	9	141	**368,249**	523,875	214,312	169,862	6,4	1,5
Z-573335.TR2	7	184	**368,3**	596,9	203,2	133,35	9,7	2,4

1) Without intermediate ring.

2) Without intermediate ring, with lubrication groove in the inner and outer ring.

3) The comparative designations were taken from documents available to us.
They give information on identical main dimensions and chamfer dimensions only.
The cage and bearing designs are not always identical.
Furthermore, the table makes no claims to completeness.

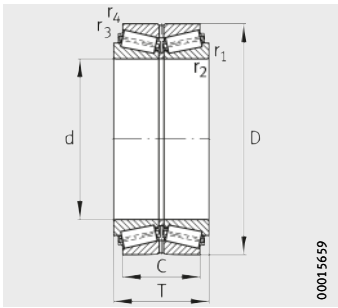

Design 8
With pin cage

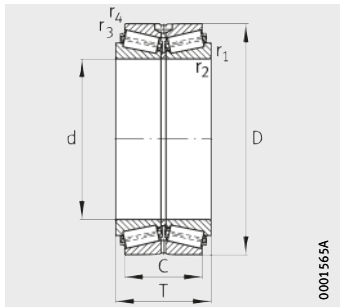

Design 9
With pin cage

Basic load ratings		Calculation factors				Fatigue limit load	Interchange designation[3)]
dyn. C_r kN	stat. C_{0r} kN	e	Y_1	Y_2	Y_0	C_{ur} kN	TDO types
1 920	4 000	0,34	2	2,98	1,96	445	H242649.610CD
1 120	2 600	0,59	1,14	1,7	1,12	285	NA130902.131401D
1 120	2 600	0,59	1,14	1,7	1,12	285	HM746646.610D
1 120	2 600	0,59	1,14	1,7	1,12	285	130902.131401D
2 600	4 500	0,94	0,72	1,07	0,7	440	HH949549.510CD
830	1 960	0,41	1,66	2,47	1,62	–	NA8575SW.8520D
830	1 960	0,41	1,66	2,47	1,62	–	NA8575SW.8522D
820	1 720	0,33	2,03	3,02	1,98	182	LM249747NW.LM249710CD
1 360	3 150	0,34	1,98	2,95	1,94	335	M249749.710CD
1 870	3 550	0,33	2,02	3	1,97	360	HM252344NW.HM252311D
3 450	5 700	0,87	0,78	1,16	0,76	530	HH953749.710D
1 870	3 550	0,33	2,02	3	1,97	360	HM252349.310D
880	2 160	0,32	2,12	3,15	2,07	–	LM251649NW.LM251610D
1 180	3 200	0,43	1,56	2,33	1,53	–	LM654649.610CD
2 220	3 850	0,78	0,87	1,29	0,85	365	EE147112.198D
1 730	4 100	0,35	1,94	2,89	1,9	430	M255449.410CD
1 790	4 350	0,36	1,86	2,77	1,82	450	HM256849.810D
980	2 550	0,36	1,88	2,8	1,84	260	L357049NW.L357010D
1 350	3 200	0,4	1,69	2,52	1,65	325	EE129120X.173CD
2 210	4 000	0,88	0,76	1,14	0,75	370	EE148122.220D
1 250	2 800	0,38	1,79	2,67	1,75	280	EE291250.751CD
2 070	5 200	0,33	2,03	3,02	1,98	520	HM259049.010CD
2 070	4 500	0,47	1,43	2,12	1,4	440	EE526130.191CD
2 120	5 400	0,38	1,79	2,67	1,75	540	HM261049.010CD
2 480	6 300	0,33	2,03	3,02	1,98	620	–
2 480	6 300	0,33	2,03	3,02	1,98	620	HM262749.710CD
1 210	3 600	0,31	2,2	3,27	2,15	–	TIMKENSERIE L163100
1 250	3 750	0,31	2,2	3,27	2,15	–	L163149.110CD
1 620	3 650	0,44	1,53	2,28	1,5	345	–
1 620	3 650	0,44	1,53	2,28	1,5	345	EE231400.231976CD
2 750	6 800	0,35	1,92	2,86	1,88	660	HM265049.010CD
2 850	5 500	0,42	1,62	2,42	1,59	495	EE181453.351CD

Tapered roller bearings

Double row,
O arrangement,
in inch sizes

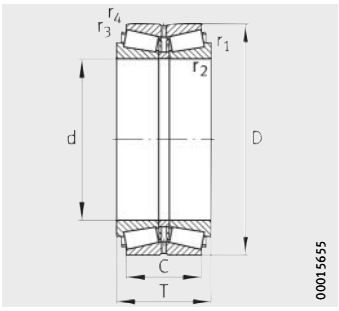

Design 6

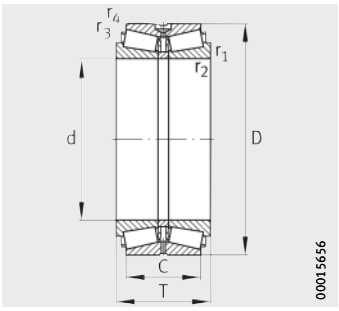

Design 7

Dimension table (continued) · Dimensions in mm

Designation	Design	Mass	Dimensions					
		m	d	D	T	C	r_1, r_2	r_3, r_4
		≈kg					min.	min.
Z-527366.TR2	7	73,7	**371,475**	501,65	155,575	107,95	6,4	1,5
Z-526251.TR2	6	66,8	**381**	508	139,7	88,9	6,4	1,5
Z-547099.TR2	7	238	**381**	590,55	244,475	193,675	6,4	1,5
Z-581097.TR2	9	247	**381**	590,55	244,475	193,675	6,4	1,5
Z-505615.TR2	6	159	**384,175**	546,1	222,25	177,8	6,4	1,5
Z-579745.TR2	9	159	**384,175**	546,1	222,25	177,8	6,4	1,5
Z-505611.02.TR2	6	96,5	**396,875**	546,1	158,75	117,475	6,4	1,5
Z-525845.TR2	7	117	**406,4**	546,1	185,738	147,638	6,4	1,5
Z-507670.TR2	6[1)]	110	**406,4**	574,675	157,162	106,362	6,4	1,5
Z-515494.TR2	7	167	**406,4**	609,524	177,8	133,35	8,1	1,5
Z-578129.TR2	9	207	**415,925**	590,55	244,475	193,675	6,4	1,5
Z-517498.01.TR2	7	200	**415,925**	590,55	244,475	193,675	6,4	1,5
Z-517498.TR2	6	200	**415,925**	590,55	244,475	193,675	6,4	1,5
Z-527127.TR2	7	95,5	**431,8**	571,5	155,575	111,125	3,3	1,5
Z-512346.TR2	6	241	**447,675**	635	257,175	206,375	6,4	1,6
Z-521467.01.TR2	7	241	**447,675**	635	257,175	206,375	6,4	1,5
Z-579097.TR2	8	244	**447,675**	635	257,175	206,375	6,4	1,5
Z-529635.TR2	7	110	**457,2**	596,9	165,1	120,65	9,7	1,5
Z-541705.TR2	7	238	**457,2**	660,4	228,6	171,45	6,4	1,5
Z-578647.TR2	9	304	**479,425**	679,45	276,225	222,25	6,4	1,5
Z-517499.02.TR2	7	299	**479,425**	679,45	276,225	222,25	6,4	1,5
Z-515917.01.TR2	7	135	**488,95**	634,873	180,975	136,525	6,4	1,5
Z-505610.TR2	6	184	**488,95**	660,4	206,375	158,75	6,4	1,5
Z-515127.01.TR2	7	122	**498,475**	634,873	177,8	142,875	6,4	1,5
Z-528996.TR2	7	344	**501,65**	711,2	292,1	231,775	6,4	1,5
Z-578586.TR2	9	354	**501,65**	711,2	292,1	231,775	6,4	1,5
Z-518884.TR2	6	589	**508**	838,2	304,8	222,25	9,7	3,3
Z-528407.TR2	7	210	**520,7**	736,6	186,502	114,3	6,4	1,5
Z-581098.TR2	9	427	**536,575**	761,873	311,15	247,65	6,4	1,5
Z-577417.TR2	9	431	**536,575**	761,873	311,15	247,65	6,4	1,5
Z-536948.01.TR2	7	191	**558,8**	736,6	187,328	138,112	6,4	1,5
Z-521229.02.TR2	7	244	**558,8**	736,6	225,425	177,8	6,4	1,5
Z-541361.TR2	9	255	**558,8**	736,6	225,425	177,8	6,4	1,5

1) Without intermediate ring.

2) The comparative designations were taken from documents available to us.
They give information on identical main dimensions and chamfer dimensions only.
The cage and bearing designs are not always identical.
Furthermore, the table makes no claims to completeness.

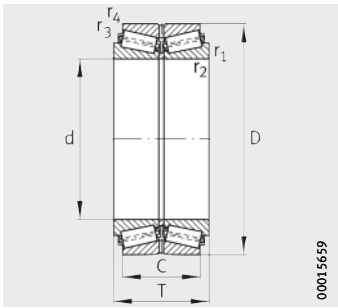

Design 8
With pin cage

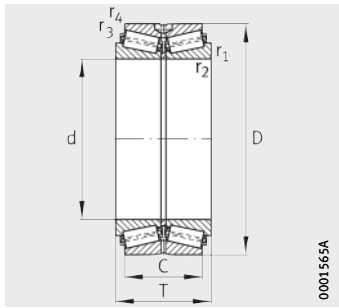

Design 9
With pin cage

Basic load ratings		Calculation factors				Fatigue limit load	Interchange designation[2)]
dyn. C_r kN	stat. C_{0r} kN	e	Y_1	Y_2	Y_0	C_{ur} kN	TDO types
1 600	3 650	0,44	1,53	2,28	1,5	–	EE231462.976CD
1 280	3 200	0,53	1,27	1,89	1,24	305	EE192150.201CD
3 350	8 300	0,34	1,98	2,94	1,93	–	M268730.710CD
3 550	8 900	0,34	1,98	2,94	1,93	820	M268730.710CD
3 050	7 800	0,33	2,03	3,02	1,98	–	HM266449.HM410CD
3 050	7 900	0,33	2,03	3,02	1,98	750	HM266449.410CD
1 770	4 250	0,47	1,43	2,12	1,4	390	EE234156.216D
2 260	6 200	0,45	1,5	2,24	1,47	590	M667944.911CD
1 690	3 650	0,51	1,31	1,96	1,28	325	NA285160.228D
2 470	5 500	0,47	1,44	2,15	1,41	495	EE736160.239CD
3 550	8 900	0,34	1,98	2,94	1,93	820	M268749.710CD
3 600	9 150	0,33	2,03	3,02	1,98	–	M268749.710CD
3 600	9 150	0,33	2,03	3,02	1,98	–	M268749.710CD
2 000	4 800	0,55	1,24	1,84	1,21	445	LM869448.410CD
4 200	10 400	0,33	2,07	3,09	2,03	940	M270749.M270710D
4 200	10 400	0,33	2,07	3,09	2,03	940	M270749.710CD
4 300	10 700	0,33	2,07	3,09	2,03	970	M270749.M270710D
2 040	5 600	0,4	1,68	2,51	1,65	510	EE244180.236CD
3 750	9 000	0,35	1,95	2,9	1,91	800	M271648.610CD
4 600	11 900	0,35	1,92	2,86	1,88	1 060	M272749.710CD
4 650	12 200	0,33	2,03	3,02	1,98	–	M272749.710CD
2 490	6 700	0,47	1,43	2,12	1,4	600	LM772748.710CD
2 550	6 800	0,45	1,5	2,23	1,46	610	EE640192.261D
2 010	5 600	0,43	1,58	2,35	1,54	500	EE243196.251CD
4 900	12 800	0,35	1,92	2,86	1,88	1 130	M274149.110CD
5 000	13 200	0,35	1,92	2,86	1,88	1 160	M274149.110CD
5 500	11 900	0,49	1,38	2,06	1,35	1 000	EE426200.331D
2 550	5 700	0,48	1,42	2,11	1,39	480	EE982051.901CD
6 000	15 300	0,3	2,28	3,39	2,23	–	M276449.410CD
6 100	15 400	0,3	2,28	3,39	2,23	1 330	M276449.410CD
2 950	7 600	0,34	1,98	2,94	1,93	640	EE843220.291CD
3 900	11 000	0,35	1,95	2,9	1,91	940	LM377449.410CD
3 950	11 200	0,35	1,95	2,9	1,91	960	LM377449.410CD

Tapered roller bearings

Double row,
O arrangement,
in inch sizes

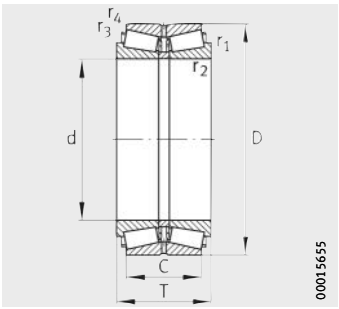

Design 6

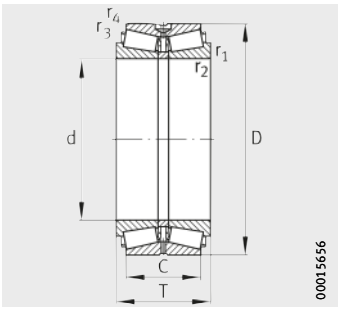

Design 7

Dimension table (continued) · Dimensions in mm

Designation	Design	Mass	Dimensions					
		m	d	D	T	C	r_1, r_2	r_3, r_4
		≈kg					min.	min.
Z-536529.TR2	7	514	**571,5**	812,8	333,375	263,525	6,4	1,5
Z-566721.TR2	9	535	**571,5**	812,8	333,375	263,525	6,4	1,5
Z-524528.TR2	7	248	**602,945**	787,4	206,375	158,75	6,4	1,5
Z-513974.TR2	7	237	**609,6**	787,4	206,375	158,75	6,4	1,5
Z-533433.TR2	6	244	**609,6**	812,8	190,5	146,05	6,4	3,3
Z-574101.TR2	8	920	**635**	990,6	339,725	212,725	6,4	1,5
Z-514502.TR2	7	207	**660,4**	812,8	203,2	158,75	6,4	1,5
Z-512516.TR2	7	275	**685,8**	876,3	200,025	152,4	6,4	1,5
Z-521233.TR2	6	285	**711,2**	914,4	190,5	139,7	6,4	1,5
Z-512878.TR2	6	258	**723,9**	914,4	187,325	139,7	5,6	1,5
Z-514528.TR2	6	293	**762**	965,2	187,325	133,35	6,4	1,5
Z-512407.TR2	6	277	**774,7**	965,2	187,325	133,35	6,4	1,5
Z-576448.TR2	7	269	**774,7**	965,2	187,325	133,35	6,4	1,5
Z-521084.TR2	6	420	**812,8**	1 016	190,5	146,05	6,4	1,5
Z-518817.TR2	6	430	**812,8**	1 066,8	190,5	146,05	6,4	3,3
Z-512406.TR2	6	188	**914,4**	1 066,8	139,7	101,6	6,4	3,3
Z-579565.TR2	8	200	**914,4**	1 066,8	139,7	101,6	6,4	3,3
Z-579534.TR2	8	812	**1 160**	1 430	240	180	9,5	5
Z-563113.TR2	8	2 370	**1 320,8**	1 727,2	412,75	254	31	3

[1] The comparative designations were taken from documents available to us.
They give information on identical main dimensions and chamfer dimensions only.
The cage and bearing designs are not always identical.
Furthermore, the table makes no claims to completeness.

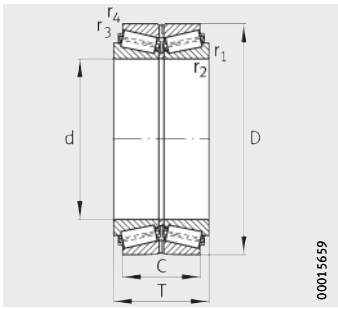

Design 8
With pin cage

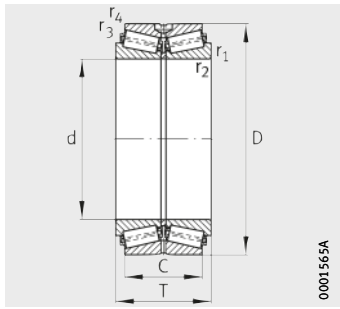

Design 9
With pin cage

Basic load ratings		Calculation factors				Fatigue limit load	Interchange designation[1)]
dyn. C_r kN	stat. C_{0r} kN	e	Y_1	Y_2	Y_0	C_{ur} kN	TDO types
6 600	17 000	0,33	2,03	3,02	1,98	1 440	M278749.710CD
6 900	18 100	0,33	2,03	3,02	1,98	1 530	M278749.M278710CD
3 100	9 000	0,5	1,35	2,01	1,32	760	EE649237.311CD
3 100	9 000	0,5	1,35	2,01	1,32	760	EE649240.311CD
3 150	8 200	0,33	2,03	3,02	1,98	670	EE743240.321D
7 400	16 500	0,87	0,78	1,16	0,76	1 260	SKF BT28 332493
3 550	10 600	0,33	2,03	3,02	1,98	–	L281148.110CD
3 350	9 900	0,41	1,66	2,47	1,62	810	EE655270.346CD
3 400	9 500	0,38	1,77	2,63	1,73	750	EE755280.361D
3 400	9 500	0,38	1,77	2,63	1,73	750	EE755285.361CD
3 500	10 100	0,4	1,67	2,49	1,63	780	EE752300.381D
3 500	10 100	0,4	1,67	2,49	1,63	780	EE752305.381D
3 500	10 100	0,4	1,67	2,49	1,63	780	EE752305.381CD
3 550	11 300	0,48	1,42	2,11	1,38	880	EE762320.401D
3 550	11 300	0,48	1,42	2,11	1,38	880	EE762320.420XD
2 400	7 700	0,41	1,64	2,44	1,6	570	LL686947.910D
2 550	8 300	0,41	1,64	2,44	1,6	620	LL686947.910D
6 700	23 000	0,4	1,68	2,5	1,64	1 600	–
13 500	42 000	0,83	0,81	1,21	0,79	2 750	SKF BT2B 332495

Tapered roller bearings

Double row,
X arrangement
With large contact angle
Axial bearings for work rolls

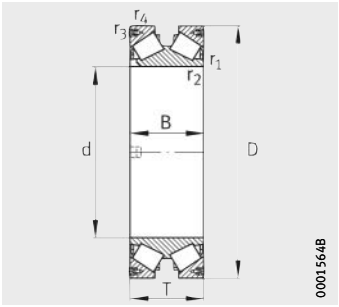

Design 12

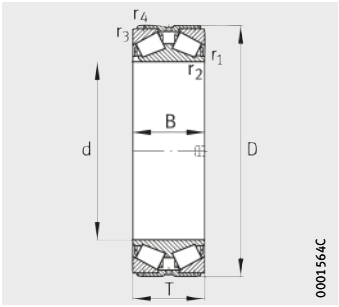

Design 13

Dimension table · Dimensions in mm

Designation	Design	Mass	Dimensions					
		m	d	D	T	B	r_1, r_2	r_3, r_4
		≈kg					min.	min.
F-803422.TR2	12	66	**160**	343	160	160	2	2
F-801948.TR2	12	77,5	**190**	370	170	170	2	2
F-801984.TR2	14	97	**190**	370	210	210	2	2
F-800942.TR2	12	74,3	**230**	404	152	144	2	2
F-803185.TR2	14	78	**230**	404	152	152	2	2
F-803722.TR2	13	62	**300**	460	105	105	4	2
F-801555.TR2	13	126	**300**	480	180	180	3	2
F-801521.TR2	12	112	**300**	480	180	180	2	3
F-801925.TR2	14[1)]	140	**300**	480	220	220	5	4
F-801250.TR2	12	92,3	**320**	480	160	160	2	2
F-801949.TR2	12	86,6	**365,6**	514,35	140	140	2	2
F-804525.TR2	13	163	**380**	568	180	180	2	2
F-801926.TR2	12	154	**380**	570	180	180	2	2
F-801999.TR2	14[1)]	245	**380**	590	260	260	2,5	3
Z-578815.TR2	13	150	**390**	568	180	180	2	2
F-804510.TR2	14	136	**390**	570	180	180	4	7
F-801249.TR2	12	145	**390**	570	180	180	2	2
Z-579673.TR2	13	191	**390**	570	200	200	5	2
F-800967.TR2	12	180	**390**	590	200	200	5	5
F-801950.TR2	12	280	**400**	650	240	240	6	6
F-803312.TR2	14[2)]	80	**406,4**	546,1	138,113	138,113	1,5	3
F-801951.TR2	12	107	**406,4**	566,1	150	150	2	4
Z-578243.TR2	13	64,4	**420**	525	112	112	1,5	2
F-803169.TR2	14	166	**440**	615,95	200	200	3,3	4,8
F-801946.TR2	14[1)]	182	**440**	615,95	220	220	3,3	4,8
F-803717.TR2	12	138	**445**	620	160	160	2	2
Z-578242.TR2	13	140	**445**	620	160	160	2	2
F-801674.TR2	13	248	**450**	680	180	180	2,5	6
Z-578619.TR2	13	243	**460**	702	180	180	2,5	6
Z-580901.TR2	13	127	**482**	620	160	160	2	5
F-801495.TR2	12	140	**482**	640	160	160	2	2
Z-578620.TR2	13	152	**540**	685	146	146	3	4

1) No retaining slots in the inner ring.

2) Outside diameter of seal carriers = 547 mm.

Design 12 Inner ring, outer rings and rollers made from case hardening steel.
Design 13, 14 Inner ring made from case hardening steel.

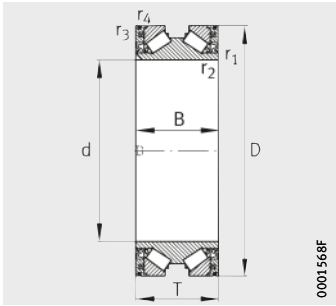

Design 14
Sealed

Basic load ratings		Calculation factors				Fatigue limit load
dyn. C_r kN	stat. C_{0r} kN	e	Y_1	Y_2	Y_0	C_{ur} kN
1 390	2 300	0,8	0,84	1,25	0,82	250
1 440	2 600	0,87	0,78	1,16	0,76	280
1 440	2 600	0,87	0,78	1,16	0,76	280
1 440	2 650	1,05	0,64	0,96	0,63	270
1 040	1 930	0,87	0,78	1,16	0,76	–
910	1 970	0,86	0,79	1,17	0,77	188
1 820	4 000	0,87	0,78	1,16	0,76	400
1 940	4 000	0,87	0,78	1,16	0,76	390
1 990	4 250	0,87	0,78	1,16	0,76	–
1 640	3 650	0,87	0,78	1,16	0,76	360
1 460	3 800	0,87	0,78	1,16	0,76	365
2 060	5 300	0,87	0,78	1,16	0,76	500
2 060	5 300	0,87	0,78	1,16	0,76	500
2 950	6 800	0,87	0,78	1,16	0,76	630
2 060	5 300	0,87	0,78	1,16	0,76	510
1 600	3 550	0,82	0,82	1,22	0,8	335
2 060	5 300	0,87	0,78	1,16	0,76	500
2 440	5 600	0,87	0,78	1,16	0,76	520
2 440	5 600	0,87	0,78	1,16	0,76	520
3 550	7 200	0,87	0,78	1,16	0,76	630
1 160	2 850	0,87	0,78	1,16	0,76	–
1 600	4 300	0,87	0,78	1,16	0,76	–
1 140	3 450	0,7	0,97	1,44	0,94	325
1 880	4 750	0,87	0,78	1,16	0,76	430
2 450	5 800	0,87	0,78	1,16	0,76	510
1 880	4 750	0,87	0,78	1,16	0,76	430
1 880	4 750	0,87	0,78	1,16	0,76	430
2 700	6 000	0,87	0,78	1,16	0,76	520
2 650	6 100	0,97	0,69	1,03	0,68	–
1 760	5 600	0,94	0,72	1,07	0,7	–
2 000	6 000	0,87	0,78	1,16	0,76	–
1 960	6 000	0,87	0,78	1,16	0,76	–

Tapered roller bearings

Double row,
X arrangement
With large contact angle
Axial bearings
for oil film bearings

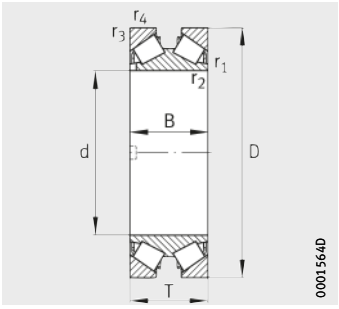

Design 15

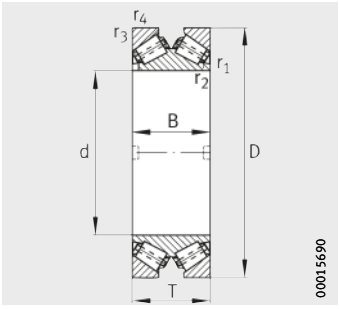

Design 16
With pin cage

Dimension table · Dimensions in mm

Designation	Design	Mass	Dimensions					
		m	d	D	T	B	r_1, r_2	r_3, r_4
		≈kg					min.	min.
Z-564447.TR2	15	19,1	**250**	340	76	76	2,5	2
Z-566446.TR2	15	17,8	**250**	350	67	67	2,5	2
Z-549122.TR2	15	21,5	**250**	350	76	76	2,5	2
Z-567453.TR2	15	57,3	**280**	420	130	130	2,5	2
Z-575386.TR2	15	28,1	**285**	380	92	92	2,5	2
Z-531529.TR2	19	49	**300**	440	105	105	4	4
Z-531296.01.TR2	19	143	**305**	500	200	200	6	6
Z-533062.TR2	18[1)]	150	**305**	500	200	200	5	6
F-801264.TR2	16[1)]	190	**305**	560	200	200	6	12
Z-525154.TR2	16	206	**305**	560	200	200	6	12
Z-575342.TR2	17	207	**380**	590	210	210	2,5	5
Z-535533.TR2	18[1)]	270	**400**	650	200,025	200	2,5	5
Z-531295.01.TR2	19	281	**400**	650	240	240	6	6
F-801317.TR2	17	135	**445**	620	160	160	2	5
Z-525155.TR2	16	280	**483**	734	200	200	6,4	6,4
F-807792.TR2	17	271	**510**	734	200,025	200,025	3,3	4,8
Z-524209.01.TR2	17[2)]	285	**510**	734	200,025	200,025	3,3	4,8
Z-531530.TR2	19	484	**510**	800	285	285	7,5	6
Z-531531.02.TR2	17	684	**635**	940	304,8	304,8	3,3	6,4
Z-524241.TR2	15	761	**635**	940	304,8	304,8	3,3	6,4
Z-524210.TR2	18	475	**686**	940	228,575	235,077	3,3	6,4
Z-535959.TR2	17[2)]	869	**800**	1 100	300	300	1	6

1) With sheet steel cages.

2) With pin cages.

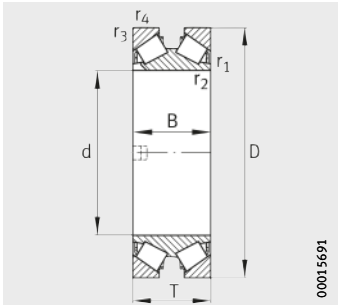

Design 17

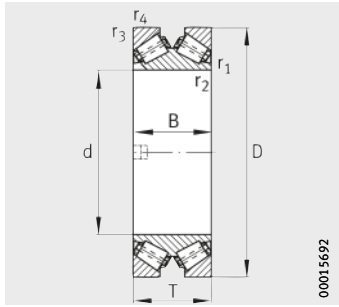

Design 18
With pin cage

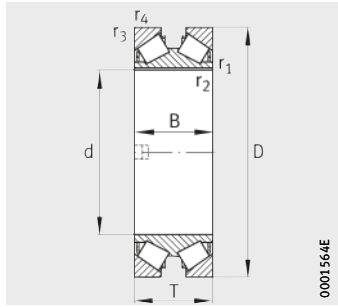

Design 19

Basic load ratings		Calculation factors				Fatigue limit load
dyn. C_r kN	stat. C_{0r} kN	e	Y_1	Y_2	Y_0	C_{ur} kN
550	1 210	0,96	0,7	1,05	0,69	95
425	880	0,94	0,72	1,07	0,7	75
550	1 210	0,96	0,7	1,05	0,69	95
1 240	2 440	0,79	0,85	1,27	0,83	245
710	1 700	0,94	0,72	1,07	0,7	166
910	1 970	0,86	0,79	1,17	0,77	188
2 280	4 700	0,87	0,78	1,16	0,76	450
2 280	4 700	0,87	0,78	1,16	0,76	450
2 410	4 450	0,87	0,78	1,16	0,76	415
2 600	5 000	0,87	0,78	1,16	0,76	470
2 950	6 800	0,87	0,78	1,16	0,76	630
2 900	6 400	0,87	0,78	1,16	0,76	570
3 550	7 200	0,87	0,78	1,16	0,76	630
2 040	5 000	0,87	0,78	1,16	0,76	455
3 100	6 700	0,99	0,68	1,01	0,67	570
3 100	8 200	0,94	0,72	1,07	0,7	710
3 200	8 700	0,94	0,72	1,07	0,7	750
5 100	11 300	0,87	0,78	1,16	0,76	950
5 900	15 600	0,87	0,78	1,16	0,76	1 250
6 200	16 500	0,87	0,78	1,16	0,76	1 320
4 600	14 000	0,8	0,85	1,26	0,83	1 130
6 600	21 000	0,8	0,85	1,26	0,83	1 610



FAG

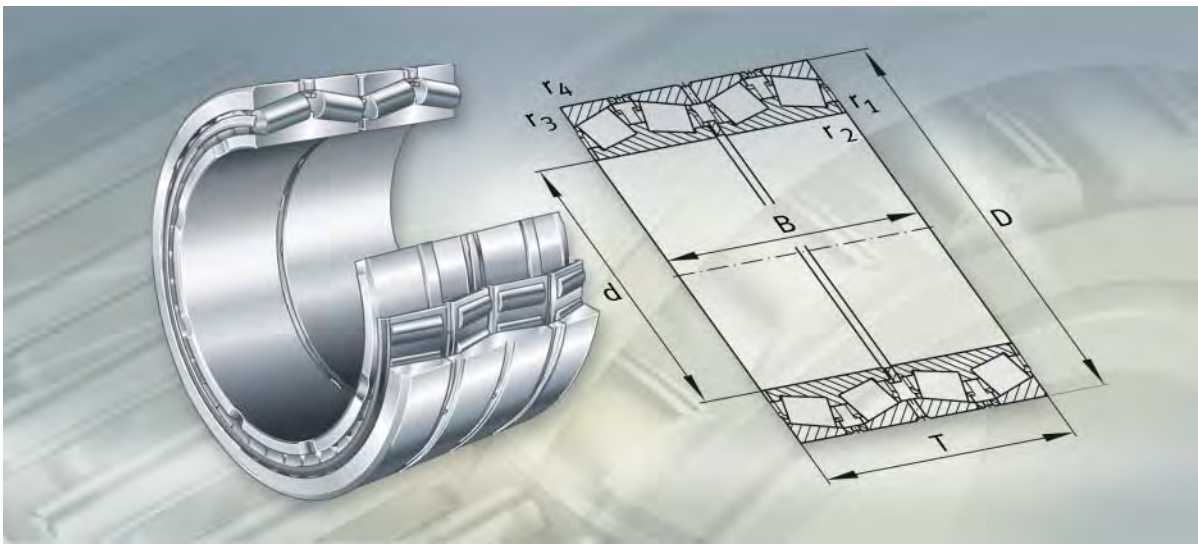

Four-row tapered roller bearings

Four-row tapered roller bearings

		Page
Product overview	Four-row tapered roller bearings	558
Features	Radial and axial load capacity	559
	Open bearings	560
	Sealed bearings	562
	Bearings with extended inner rings	563
	Operating temperature	563
	Cages	563
Design and safety guidelines	Equivalent loads	564
	Equivalent dynamic bearing load	564
	Equivalent static bearing load	564
	Minimum radial load	565
	Comparative load ratings	565
	Design of bearing arrangements	565
Accuracy	Axial internal clearance	566
Dimension tables	Tapered roller bearings, four-row, inch sizes	568
	Tapered roller bearings, four-row, metric sizes	578
	Tapered roller bearings, four-row, sealed on both sides	586
	Tapered roller bearings, four-row, with extended inner rings	592



Metric sizes and inch sizes

Z-5..TR4-01, Z-5..TR4-02,
F-8..TR4-01, F-8..TR4-02

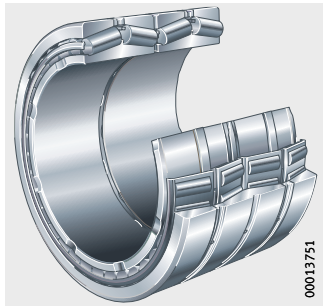

With integral seals

Z-5..TR4-03, F-8..TR4-03

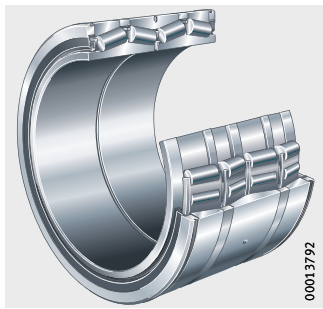

With extended inner rings

Z-5..TR4-04, F-8..TR4-04

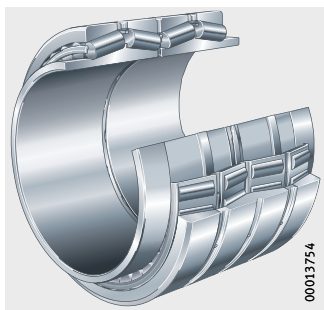

Four-row tapered roller bearings

Features

Four-row tapered roller bearings comprise solid bearing rings and tapered roller and cage assemblies. They are suitable for axial loads in both directions and high radial loads.

The bearings described here are separable. The complete bearing must be mounted in the chock, after which the chock together with the bearing is slid onto the journal. This requires a loose fit for the inner ring on the journal.

For high speeds and loads, however, the inner ring must have a tight fit. This can be achieved by mounting bearings with a tapered bore on tapered roll journals.

Four-row tapered roller bearings are normally supplied with spacer rings between the outer rings while, in a few cases, they do not have intermediate rings.

Four-row tapered roller bearings are used, for example, in bearing arrangements for work rolls (bearings with sheet metal cage) or back-up rolls (bearings with pin cage). In addition to open bearings, sealed designs are also available. They are used to reduce the grease consumption in work roll bearings.

Four-row tapered roller bearings have non-standardised metric or inch dimensions and designations Z-5..TR4 or F-8..TR4.
Design variants are indicated by the Technical Specification H122**. These can requested from Schaeffler.

Radial and axial load capacity

Four-row tapered roller bearings can support axial forces in both directions as well as high radial forces. Where there are particularly high demands on axial guidance, an additional axial bearing is used in some cases.



Four-row tapered roller bearings

Open bearings

Open four-row tapered roller bearings are available in four designs in metric or inch sizes and tolerances, *Figure 1* and *Figure 2*, page 561.

Design 1

- The outer ring comprises a double ring and two single rings.
- The inner ring bore is smooth.
- The bearings have sheet metal cages.
- Design 1 is particularly suitable for smaller bearings in work rolls that are subjected to low loads and exhibit little journal wear.

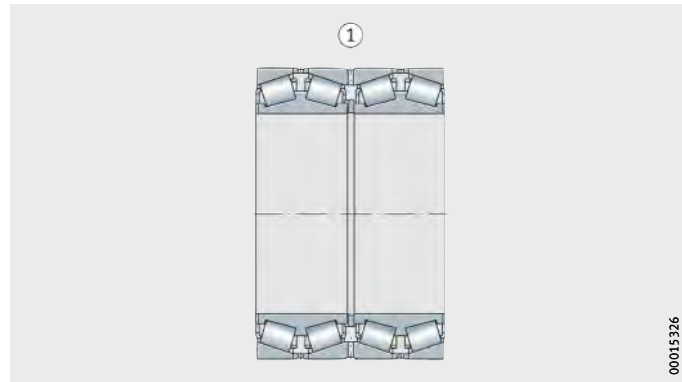

① Design 1

Figure 1
Open four-row tapered roller bearing

Design 2

- The outer ring comprises a double ring and two single rings.
- The helical groove in the inner ring bore is intended to give good lubrication of the fit joint.
- The bearings have sheet metal cages.

Design 3

- The outer ring comprises a double ring and two single rings.
- The inner ring bore is smooth.
- Large bearings have through-drilled rollers and pin cages. This is necessary in reversing type stands due to the high inertia forces.

Design 4

- The outer ring comprises a double ring and two single rings.
- The inner ring bore has a helical groove.
- The bearings have through-drilled rollers and pin cages.

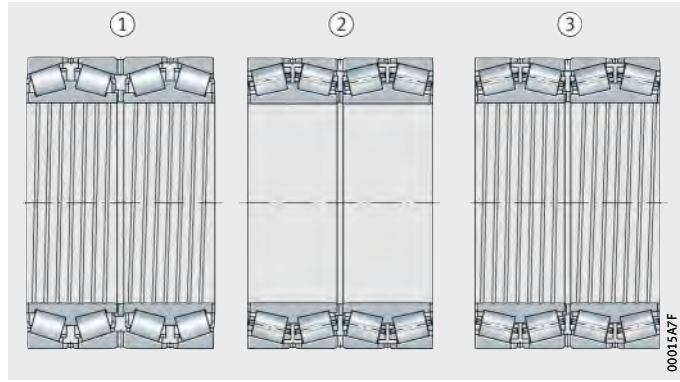

① Design 2
② Design 3
③ Design 4

Figure 2
Open four-row tapered roller bearings

Sealed bearings

Work roll bearing arrangements in hot or cold rolling lines must be effectively sealed against large quantities of water or roll coolant that are mixed with contaminants.
These bearing arrangements are normally lubricated with grease. For cost and environmental reasons, it is desirable to achieve low levels of grease consumption. Four-row tapered roller bearings with integrated seals have therefore been developed, *Figure 3*. These bearings have main dimensions identical to those of the open bearings. Only small quantities of the high quality rolling bearing grease used are required.
Although the basic load ratings of the sealed bearings are lower, they normally have a longer life than the open bearings due to the improved cleanliness in the lubrication gap.

Design 5
- The outer ring comprises a double ring and two single rings.
- The inner ring bore has a helical groove.
- The bearings have sheet metal cages.

Design 6
- The outer ring comprises a double ring and two single rings.
- The inner ring bore has a helical groove.
- The bearings have pin cages.

Design 7
- The outer ring comprises a double ring and two single rings.
- The inner rings are laterally extended.
- The inner ring bore has a helical groove.
- The bearings have sheet metal cages.

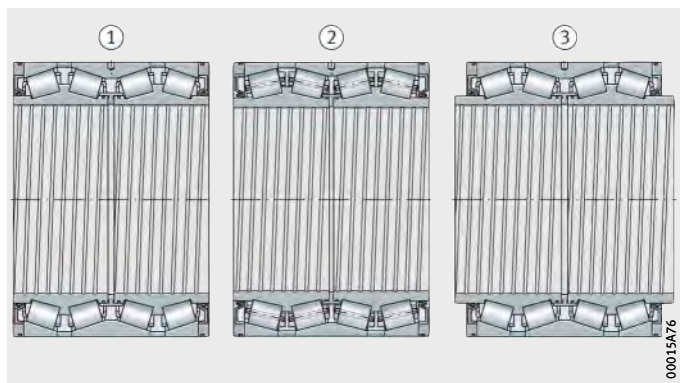

① Design 5
② Design 6
③ Design 7

Figure 3
Sealed four-row tapered roller bearings

Bearings with extended inner rings

Design 8

- The outer ring comprises a double ring and two single rings.
- The inner ring bore is smooth.
- The bearings have sheet metal cages.
- The lateral extended sections of the inner ring are ground and designed as sliding surfaces for rotary shaft seals, *Figure 4*.

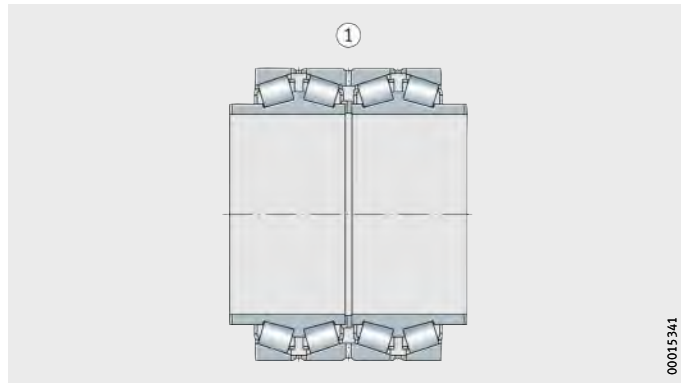

① Design 8

Figure 4
Four-row tapered roller bearing with extended inner rings

Operating temperature

Open and sealed four-row tapered roller bearings can be used at operating temperatures from –30 °C to +150 °C, depending on the lubricant.

The rotary shaft seals on the sealed bearings are made from fluoro elastomer, which can give off gases and vapours harmful to health at approx. +300 °C or higher. This may occur, for example, if a welding torch is used in the dismounting of the bearings. If high temperatures are unavoidable, attention must be paid to the valid safety data sheet for the material.

Cages

Smaller four-row tapered roller bearings, which are used predominantly in work rolls, are subjected to smaller loads. For these bearings, a sheet steel cage is normally suitable.

Large back-up roll bearings must generally support very high loads. These bearings are fitted with through-drilled rollers and pin cages. Pin cages are necessary in reversing type stands due to the high inertia forces.



Design and safety guidelines

Equivalent loads

Four-row tapered roller bearings can support radial and axial loads. When determining the equivalent dynamic and static loads, only one row of rollers is considered, in contrast to DIN ISO 281.

Equivalent dynamic bearing load

The equivalent dynamic load P is valid for bearings that are subjected to radial and axial dynamic loads. It gives the same rating life as the combined bearing load occurring in practice.

For bearings under dynamic loading, the following applies (for one row):

Load ratio and equivalent dynamic load

Load ratio	Equivalent dynamic load
$\frac{F_a}{F_r} \leqq e$	$P = F_r$
$\frac{F_a}{F_r} > e$	$P = 0{,}4 \cdot F_r + Y \cdot F_a$

P kN
Equivalent dynamic bearing load for combined load

F_a kN
Axial dynamic bearing load

F_r kN
Radial dynamic bearing load

e, Y –
Factors, see dimension tables.

Equivalent static bearing load

The equivalent static load P_0 is valid for bearings that are subjected to radial and axial static loads. It induces the same load at the centre point of the most heavily loaded contact point between the rolling element and raceway as the combined bearing load occurring in practice.

For bearings under static loading, the following applies (for one row):

$$P_0 = F_{0r} + Y_0 \cdot F_{0a}$$

P_0 kN
Equivalent static bearing load for combined load

F_{0r} kN
Radial static bearing load

Y_0 –
Factor, see dimension tables

F_{0a} kN
Axial static bearing load.

Minimum radial load

In order to ensure slippage-free operation, the bearings must be subjected to a minimum radial load. This applies particularly in the case of high speeds and high accelerations.
In continuous operation, a minimum radial load of the order of $C_r/P > 0{,}02$ is therefore necessary.

Comparative load ratings

The basic dynamic load ratings C_r to DIN ISO 281 are based on a basic rating life of 1 million revolutions. Competitors sometimes give different load ratings that are based on 90 million revolutions (3 000 h at 500 min^{-1}).
Since it is not possible to compare these values with the basic load ratings calculated according to ISO, please contact us regarding the comparative load ratings C_{r90} and C_{a90}.

Design of bearing arrangements

Shaft tolerances

Four-row tapered roller bearings	Nominal dimension d mm	Tolerance[1] mm
Metric tolerances, with loose fit	< 315	–0,180...–0,230
	315 ...630	–0,240...–0,300
	> 630 ...800	–0,325...–0,410
	> 800	–0,350...–0,450
Inch tolerances, with loose fit	> 152,4...203,2	–0,150...–0,175
	> 203,2...304,8	–0,180...–0,205
	> 304,8...609,6	–0,200...–0,249
	> 609,6...914,4	–0,250...–0,334
	> 914,4	–0,300...–0,400
Axial bearings	d	e7

[1] In the case of high speeds and bearings with a tapered bore, please contact us to discuss the tolerances for the adjacent parts.

Housing tolerances

Four-row tapered roller bearings	Nominal dimension D mm	Tolerance[1] mm
Metric tolerances	≦ 800	H6
	> 800	H7
Inch tolerances	> 304,8... 609,6	+0,101...+0,150
	> 609,6... 914,4	+0,156...+0,230
	> 914,4...1 219,2	+0,202...+0,300
	> 1 219,6	+0,257...+0,380



[1] In the case of high axial forces and bearings with a tapered bore, please contact us to discuss the tolerances for the adjacent parts.

Accuracy

The dimensional and running tolerances of four-row tapered roller bearings are generally defined for individual cases.
Please contact us regarding the values.
Normal tolerances for bearings in metric and inch sizes should be taken from the following tables.

Normal tolerances for bearings in metric sizes

Nominal dimension mm		Bore deviation Δ_{dmp} µm		Outside diameter deviation Δ_{Dmp} µm		Width deviation $\Delta_{Bs} = \Delta_{Cs}$ µm	
over	incl.	max.	min.	max.	min.	max.	min.
180	250	0	−30	0	−30	0	−300
250	315	0	−35	0	−35	0	−350
315	400	0	−40	0	−40	0	−400
400	500	0	−45	0	−45	0	−450
500	630	0	−50	0	−50	0	−500
630	800	0	−75	0	−75	0	−750
800	1000	0	−100	0	−100	0	−1000
1000	1250	0	−125	0	−125	0	−1250
1250	1600	0	−160	0	−160	0	−1600
1600	2000	0	−200	0	−200	0	−2000

Normal tolerances for bearings in inch sizes

Nominal dimension mm		Bore deviation Δ_{dmp} µm		Outside diameter deviation Δ_{Dmp} µm		Width deviation $\Delta_{Bs} = \Delta_{Cs}$ µm	
over	incl.	max.	min.	max.	min.	max.	min.
304,8	609,6	+51	0	+51	0	±1524	0
609,6	914,4	+76	0	+76	0	±1524	0
914,4	1219,2	+102	0	+102	0	±1524	0
1219,2	–	+127	0	+127	0	±1524	0

Axial internal clearance

The axial internal clearance of four-row tapered roller bearings differs according to the bearing size and application.
Please contact us for values.



Tapered roller bearings

Four-row,
in inch sizes

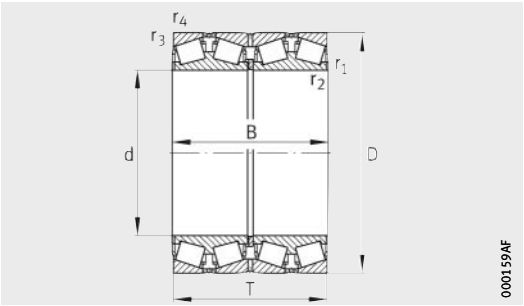

Design 1
With sheet steel cages

Dimension table · Dimensions in mm

Designation	Design	Mass	Dimensions					
		m	d	D	T	B	r_1, r_2	r_3, r_4
		≈kg					min.	min.
Z-507747.TR4	1	104	**215,9**	355,6	254	254	1,6	1,6
F-802100.TR4	1	84,1	**216,103**	330,2	269,875	263,525	1,5	3,3
Z-511115.TR4	1	101	**228,6**	355,6	260,35	266,7	1,5	1,5
Z-524152.TR4	1	164	**228,6**	400,05	296,875	296,875	3,3	3,3
Z-564027.TR4	1	80	**241,224**	355,498	288,6	228,6	1,5	3,3
F-802115.TR4	1	72	**241,478**	349,148	228,6	228,6	1,5	3,3
F-802194.TR4	1	45,5	**244,475**	327,025	193,675	193,675	1,5	3,3
F-802194.TR4-H122AA	2	45,5	**244,475**	327,025	193,675	193,675	1,5	3,3
F-802199.TR4	1	129	**244,475**	381	304,8	304,8	3,3	4,8
F-802252.TR4	1	84,5	**254**	358,775	269,875	269,875	1,5	3,3
Z-510375.TR4	1	115	**260,35**	400,05	253,995	255,585	1,5	6,4
Z-517254.TR4	1	180	**260,35**	422,275	317,5	314,325	6,4	3,3
F-802010.TR4	1	62,6	**266,7**	355,6	228,6	230,188	1,5	3,3
F-802010.TR4-H122AA	2	62,6	**266,7**	355,6	228,6	230,188	1,5	3,3
Z-515700.TR4	1	116	**266,7**	393,7	269,878	269,878	3,3	6,4
F-802099.TR4	1	103	**269,875**	381	282,575	282,575	3,3	3,3
F-802279.TR4	1	101	**276,225**	393,7	269,878	269,878	1,5	6,4
F-802009.TR4	1	100	**279,4**	393,7	269,875	269,875	1,5	6,4
F-802009.TR4-H122AA	2	100	**279,4**	393,7	269,875	269,875	1,5	6,4
F-802051.TR4	1	84	**279,578**	380,898	244,475	244,475	1,5	3,3
F-802051.TR4-H122AA	2	84	**279,578**	380,898	244,475	244,475	1,5	3,3
F-802056.TR4	1	79	**285,75**	380,898	244,475	244,475	1,5	3,3
F-802056.TR4-H122AA	2	79	**285,75**	380,898	244,475	244,475	1,5	3,3
F-802228.TR4	1	121	**288,925**	406,4	298,45	298,45	3,3	3,3
Z-533455.TR4	1	114	**298,45**	438,15	228,6	228,6	3,2	3,2
F-802067.TR4	1	145	**300**	440	279,4	280,988	3,3	4,8
F-802067.TR4-H122AA	2	145	**300**	440	279,4	280,988	3,3	3,3
F-802136.TR4	1	137	**300,038**	422,275	311,15	311,15	3,3	3,3
Z-511861.TR4	1	115	**304,8**	419,1	269,875	269,875	1,5	6,4
Z-575220.TR4	1	271	**304,8**	495,3	349,25	342,9	3,3	6,4
F-802024.TR4	1	103	**304,902**	412,648	266,7	266,7	3,3	3,3
F-802024.TR4-H122AA	2	103	**304,902**	412,648	266,7	266,7	3,3	3,3
Z-518078.TR4	1	131	**305,003**	438,048	279,4	280,99	3,3	4,8

[1] The comparative designations were taken from documents available to us.
They give information on identical main dimensions and chamfer dimensions only.
The cage and bearing designs are not always identical.
Furthermore, the table makes no claims to completeness.

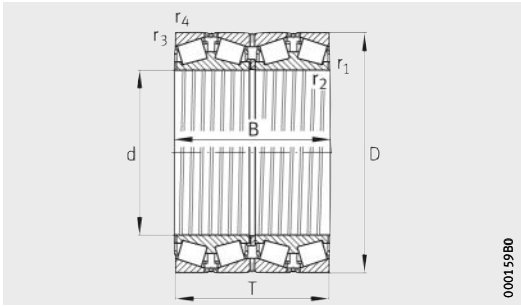

Design 2
With sheet steel cages

Basic load ratings		Calculation factors				Fatigue limit load	Interchange designation[1)]
dyn. C_r kN	stat. C_{0r} kN	e	Y_1	Y_2	Y_0	C_{ur} kN	TQO types
3 050	5 400	0,34	1,96	2,91	1,91	580	130850DW.400.401D
2 750	5 200	0,56	1,21	1,81	1,19	570	9974DW.9920.9920D
2 900	5 000	0,34	1,96	2,91	1,91	540	EE130904DW.400.402D
4 150	6 400	0,31	2,18	3,25	2,13	670	EE529091DW.157.158D
2 400	4 500	0,35	1,92	2,86	1,88	–	EE127094DW.138.139D
2 400	4 500	0,35	1,92	2,86	1,88	490	EE127097DW.135.136D
1 590	3 400	0,48	1,41	2,1	1,38	370	LM247748DW.710.710D
1 590	3 400	0,48	1,41	2,1	1,38	370	LM247748DW.710.710D
3 750	6 950	0,46	1,46	2,17	1,43	–	EE126096DW.150.151D
3 200	6 300	0,34	1,98	2,95	1,94	–	M249749DW.710.710D
2 850	5 000	0,44	1,53	2,28	1,5	530	EE221027DW.575.576D
4 350	7 100	0,33	2,02	3	1,97	720	HM252349DW.310.310D
2 550	5 400	0,36	1,9	2,83	1,86	580	LM451349DW.310.310D
2 550	5 400	0,36	1,9	2,83	1,86	580	LM451349DGW.310.310D
3 200	6 000	0,45	1,49	2,21	1,45	–	EE275106DW.155.156D
3 600	7 400	0,33	2,03	3,02	1,99	780	M252349DW.310.310D
3 200	6 000	0,45	1,49	2,21	1,45	–	EE275109DW.155.156D
3 550	6 800	0,38	1,78	2,65	1,74	700	EE135111DW.155.156D
3 550	6 800	0,38	1,78	2,65	1,74	700	EE135111DGW.155.156D
2 600	6 100	0,42	1,6	2,39	1,57	650	LM654644DW.610.610D
2 600	6 100	0,42	1,6	2,39	1,57	650	LM654644DGW.610.610D
2 600	6 100	0,42	1,6	2,39	1,57	650	LM654648DW.610.610D
2 600	6 100	0,42	1,6	2,39	1,57	650	LM654648DGW.610.610D
4 050	8 200	0,35	1,94	2,89	1,9	860	M255449DW.410.410D
3 000	5 500	0,37	1,81	2,7	1,77	–	–
3 150	6 400	0,4	1,69	2,52	1,65	650	EE129119DW.174.175D
3 150	6 400	0,4	1,69	2,52	1,65	650	EE129119DGW.174.175D
4 150	8 700	0,36	1,86	2,77	1,82	900	HM256849DW.810.810D
3 650	7 650	0,32	2,12	3,15	2,07	–	M257149DW.110.110D
5 500	9 300	0,4	1,69	2,52	1,65	900	EE724121DW.195.196D
3 650	7 700	0,32	2,12	3,15	2,07	790	M257248DW.210.210D
3 650	7 700	0,32	2,12	3,15	2,07	790	M257248DGW.210.210D
3 900	7 200	0,47	1,43	2,12	1,4	720	M757449DW.410.410D

Tapered roller bearings

Four-row,
in inch sizes

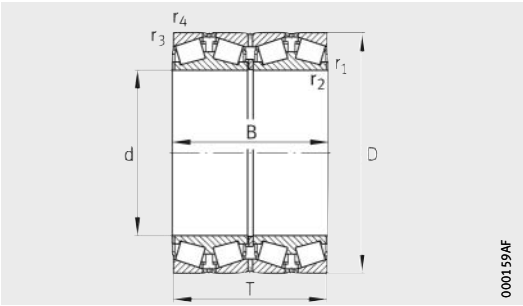

Design 1
With sheet steel cages

Dimension table (continued) · Dimensions in mm

Designation	Design	Mass	Dimensions					
		m	d	D	T	B	r_1, r_2	r_3, r_4
		≈kg					min.	min.
F-802045.TR4	1	103	**317,5**	422,275	269,875	269,875	1,5	3,3
F-802045.TR4-H122AA	2	103	**317,5**	422,275	269,875	269,875	1,5	3,3
Z-531883.TR4	1	136	**330,2**	444,5	301,625	301,625	3,3	3,3
Z-531281.TR4	1	144	**330,2**	482,6	222,25	212,725	1,6	6,4
F-802287.TR4-H122AA	2	100	**330,302**	438,023	254	247,65	1,5	3,3
F-802062.TR4	1	187	**333,375**	469,9	342,9	342,9	3,3	3,3
F-802062.TR4-M	3	193	**333,375**	469,9	342,9	342,9	3,3	3,3
Z-539439.TR4	1	236	**342,9**	533,4	301,625	307,985	3,3	3,3
Z-572452.TR4	3	369	**342,9**	571,5	342,9	342,9	3,3	6,4
F-802002.TR4-A370-400	1	110	**343,052**	457,098	254	254	1,5	3,3
F-802002.TR4-H122AA-A370-400	2	110	**343,052**	457,098	254	254	1,5	3,3
F-802028.TR4	1	215	**346,075**	488,95	358,775	358,775	3,3	3,3
F-802052.TR4	1	140	**347,662**	469,9	292,1	292,1	3,3	3,3
F-802119.TR4	1	104	**355,6**	457,2	252,412	252,412	1,5	3,3
F-802022.TR4	1	143	**355,6**	482,6	269,875	265,112	1,5	3,3
F-802022.TR4-H122AA	2	142	**355,6**	482,6	269,875	265,112	1,5	3,3
F-802137.TR4-H122AA	2	179	**355,6**	488,95	317,5	317,5	1,5	3,3
Z-548757.TR4	1	272	**368,3**	523,875	382,588	382,588	3,3	6,4
F-802177.TR4	1	135	**374,65**	501,65	260,35	250,825	1,5	3,3
F-802251.TR4	1	306	**384,175**	546,1	400,05	400,05	3,3	6,4
F-802014.TR4	1	183	**385,762**	514,35	317,5	317,5	3,3	3,3
F-802014.TR4-H122AA	2	183	**385,762**	514,35	317,5	317,5	3,3	3,3
Z-508328.02.TR4	1	192	**406,4**	546,1	288,925	268,288	1,5	6,4
F-802104.TR4-H122AA	2	183	**406,4**	546,1	288,925	288,925	1,5	6,4
F-802104.TR4	1	183	**406,4**	546,1	288,925	288,925	1,5	6,4
F-802086.TR4	1	290	**406,4**	565,15	381	381	3,3	6,4
F-802086.TR4-H122AA	2	290	**406,4**	565,15	381	381	3,3	6,4
Z-511569.TR4	1	367	**406,4**	590,55	400,05	400,05	3,3	6,4
Z-517944.TR4	3	378	**406,4**	590,55	400,05	400,05	3,3	6,4
F-802047.TR4	1	218	**409,575**	546,1	334,962	334,962	1,5	6,4
F-802047.TR4-H122AA	2	218	**409,575**	546,1	334,962	334,962	1,5	6,4
F-802047.TR4-M	3	225	**409,575**	546,1	334,962	334,962	1,5	6,4

[1] The comparative designations were taken from documents available to us.
They give information on identical main dimensions and chamfer dimensions only.
The cage and bearing designs are not always identical.
Furthermore, the table makes no claims to completeness.

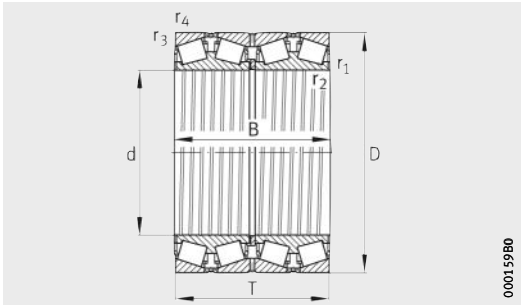

Design 2
With sheet steel cages

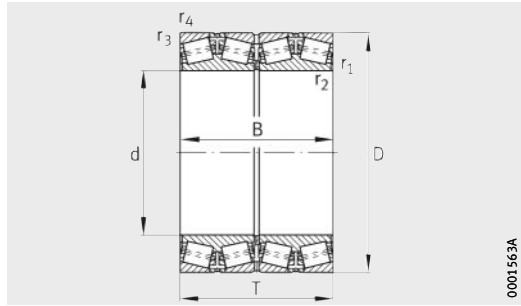

Design 3
With pin cages

Basic load ratings		Calculation factors				Fatigue limit load	Interchange designation[1]
dyn. C_r kN	stat. C_{0r} kN	e	Y_1	Y_2	Y_0	C_{ur} kN	TQO types
3 500	7 800	0,32	2,12	3,15	2,07	800	LM258648DW.610.610D
3 500	7 800	0,32	2,12	3,15	2,07	800	LM258648DGW.610.610D
3 800	8 500	0,4	1,69	2,52	1,65	850	M260149DW.110.110D
2 900	5 600	0,41	1,65	2,45	1,61	540	161301D.900.901D
3 250	6 700	0,44	1,54	2,29	1,5	670	EE138131DW.172.173D
4 950	10 700	0,38	1,79	2,67	1,75	1 070	HM261049DW.010.010D
5 000	11 000	0,38	1,79	2,67	1,75	1 100	HM261049DW.010.010D
4 950	8 000	0,33	2,03	3,02	1,98	740	971355DW.972100.972103D
6 550	10 600	0,33	2,03	3,02	1,98	–	EE536136DW.225.226D
3 250	6 700	0,47	1,43	2,12	1,4	–	LM761649DW.610.610D
3 250	6 700	0,47	1,43	2,12	1,4	–	LM761649DGW.610.610D
5 800	12 600	0,33	2,03	3,02	1,98	1 230	HM262749DW.710.710D
4 200	8 700	0,31	2,16	3,22	2,12	860	M262449DW.410.410D
3 450	8 100	0,32	2,12	3,15	2,07	810	LM263149DW.110.110D
3 550	7 900	0,45	1,51	2,25	1,48	770	LM763449DW.410.410D
3 550	7 900	0,45	1,51	2,25	1,48	770	LM763449DGW.410.410D
4 900	10 800	0,39	1,71	2,54	1,67	1 060	M263349DGW.310.310D
6 400	13 700	0,35	1,92	2,86	1,88	1 320	HM265049DW.010.010D
3 750	7 600	0,47	1,43	2,12	1,4	730	LM765149DW.110.110D
7 100	15 800	0,33	2,03	3,02	1,98	1 510	HM266449DW.410.410D
4 600	10 700	0,45	1,5	2,23	1,47	1 040	LM665949DW.910.910D
4 600	10 700	0,45	1,5	2,23	1,47	1 040	LM665949DGW.910.910D
4 150	8 500	0,47	1,43	2,12	1,4	780	EE234161DW.215.216D
4 400	9 300	0,43	1,56	2,33	1,53	–	LM767749DGW.710.710D
4 450	9 300	0,43	1,56	2,33	1,53	870	LM767749DW.710.710D
6 900	15 000	0,43	1,57	2,34	1,53	1 410	M267949DW.910.910D
6 900	15 000	0,43	1,57	2,34	1,53	1 410	M267949DGW.910.910D
7 350	15 000	0,34	1,99	2,96	1,94	–	EE833161DW.232.233D
7 700	16 100	0,34	1,99	2,96	1,94	1 490	EE833161DW.232.233D
5 300	12 400	0,45	1,5	2,24	1,47	1 190	M667947DW.910.910D
5 300	12 400	0,45	1,5	2,24	1,47	1 190	M667947DGW.910.910D
5 500	13 000	0,45	1,5	2,24	1,47	1 240	M667947DW.910.910D

Tapered roller bearings

Four-row,
in inch sizes

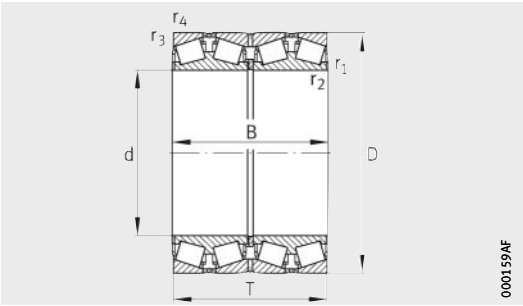

Design 1
With sheet steel cages

Dimension table (continued) · Dimensions in mm

Designation	Design	Mass	Dimensions					
		m	d	D	T	B	r_1, r_2	r_3, r_4
		≈kg					min.	min.
F-802048.TR4-H122AA	2	376	**415,925**	590,55	434,975	434,975	3,3	6,4
F-802048.TR4-M	3	402	**415,925**	590,55	434,975	434,975	3,3	6,4
F-802155.TR4	1	185	**431,8**	571,5	279,4	279,4	1,5	3,3
F-802012.TR4	1	236	**431,8**	571,5	336,55	336,55	1,5	6,4
F-802012.TR4-H122BP	2	236	**431,8**	571,5	336,55	336,55	1,5	6,4
F-802012.TR4-M	3	246	**431,8**	571,5	336,55	336,55	1,5	6,4
Z-530985.TR4	1	385	**431,8**	635	355,6	355,6	6,4	6,4
Z-530731.TR4	3	396	**431,8**	635	355,6	355,6	6,4	6,4
F-802209.TR4-H122AC	1	279	**432,003**	609,524	317,5	317,5	3,6	6,4
F-802179.TR4-H122AA	2	461	**447,675**	635	463,55	463,55	3,3	6,4
F-802179.TR4-M-H122AD	3	477	**447,675**	635	463,55	463,55	3,3	6,4
F-802098.TR4	1	197	**457,2**	596,9	279,4	276,225	1,5	3,3
F-802098.TR4-M	3	205	**457,2**	596,9	279,4	276,225	1,5	3,3
Z-506201.TR4	1	574	**479,425**	679,45	495,3	495,3	3,3	6,4
Z-561038.TR4	3	576	**479,425**	679,45	495,3	495,3	3,3	6,4
F-802006.TR4-H122AB	1	244	**482,6**	615,95	330,2	330,2	6,4	6,4
F-802006.TR4-H122BA	2	244	**482,6**	615,95	330,2	330,2	6,4	6,4
Z-561772.TR4	1	358	**482,6**	635	421	421	3	6,4
F-802237.TR4	1	384	**482,6**	647,7	417,512	417,512	3,3	6,4
F-802122.TR4	1	348	**488,95**	660,4	361,95	365,125	8	6,4
Z-518570.03.TR4	2	256	**489,026**	634,873	320,675	320,675	3,3	3,3
F-802037.TR4	1	253	**489,026**	634,873	320,675	320,675	3,3	3,3
F-802037.TR4-H122BB	2	253	**489,026**	634,873	320,675	320,675	3,3	3,3
F-802085.TR4-H122AC	1	385	**501,65**	673,1	387,35	400,05	3,3	6,4
F-802085.TR4-M	3	400	**501,65**	673,1	387,35	400,05	3,3	6,4
F-802195.TR4	1	656	**501,65**	711,2	520,7	520,7	3,3	6,4
F-802195.TR4-H122CP	2	656	**501,65**	711,2	520,7	520,7	4,6	6,4
F-802195.TR4-M	3	680	**501,65**	711,2	520,7	520,7	3,3	6,4
F-802053.TR4	1	710	**508**	762	463,55	463,55	6,4	6,4
F-802053.TR4-M	3	762	**508**	762	463,55	463,55	6,4	6,4
F-802030.TR4	1	394	**514,35**	673,1	422,275	422,275	3,3	6,4
F-802030.TR4-H122AA	2	393	**514,35**	673,1	422,275	422,275	3,3	6,4
F-802030.TR4-M	3	395	**514,35**	673,1	422,275	422,275	3,3	6,4

1) The comparative designations were taken from documents available to us.
They give information on identical main dimensions and chamfer dimensions only.
The cage and bearing designs are not always identical.
Furthermore, the table makes no claims to completeness.

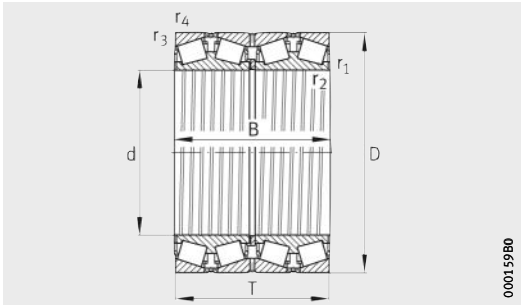

Design 2
With sheet steel cages

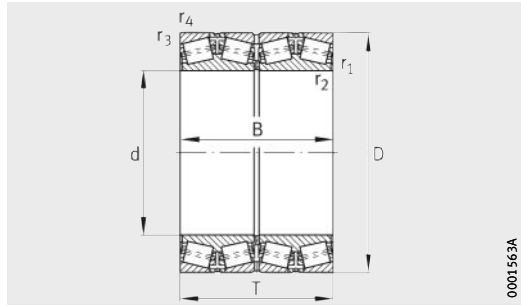

Design 3
With pin cages

Basic load ratings		Calculation factors				Fatigue limit load	Interchange designation[1]
dyn. C_r kN	stat. C_{0r} kN	e	Y_1	Y_2	Y_0	C_{ur} kN	TQO types
7 900	16 700	0,34	1,98	2,94	1,93	1 540	M268749DGW.710.710D
8 200	17 700	0,34	1,98	2,94	1,93	1 640	M268749DW.710.710D
4 650	9 600	0,55	1,24	1,84	1,21	890	LM869449DW.410.410D
5 800	13 500	0,44	1,54	2,29	1,5	1 260	LM769349DW.310.310D
5 800	13 500	0,44	1,54	2,29	1,5	1 260	LM769349DGW.310.310D
5 900	13 800	0,44	1,54	2,29	1,5	1 290	LM769349DW.310.310D
7 300	13 100	0,32	2,12	3,15	2,07	1 170	EE931170DW.250.251D
7 500	13 600	0,32	2,12	3,15	2,07	1 210	EE931170DW.250.251D
5 700	10 800	0,47	1,44	2,15	1,41	–	EE736173DW.238.239D
9 800	20 800	0,33	2,07	3,09	2,03	–	M270749DW.710.710D
10 000	21 200	0,33	2,07	3,09	2,03	–	M270749DW.710.710D
4 700	10 100	0,47	1,43	2,12	1,4	910	L770847DW.810.810D
4 750	10 300	0,47	1,43	2,12	1,4	930	L770847DW.810.810D
10 200	22 500	0,35	1,92	2,86	1,88	2 010	M272749DW.710.710D
10 700	23 900	0,35	1,92	2,86	1,88	2 130	M272749DW.710.710D
5 400	14 000	0,37	1,83	2,72	1,79	1 280	LM272248DW.210.210D
5 400	14 000	0,37	1,83	2,72	1,79	1 280	LM272248DGW.210.210D
7 700	19 000	0,33	2,03	3,02	1,98	1 730	M272449DW.410.410D
7 800	18 400	0,31	2,18	3,24	2,13	1 670	M272647DW.610.610D
6 000	13 700	0,45	1,5	2,23	1,46	–	EE640193DW.260.261D
5 600	12 800	0,47	1,43	2,12	1,4	1 150	LM772749DGW.710.710D
5 800	13 400	0,47	1,43	2,12	1,4	1 210	LM772749DW.710.710D
5 800	13 400	0,47	1,43	2,12	1,4	1 210	LM772749DGW.710.710D
8 000	18 200	0,32	2,12	3,15	2,07	1 600	EE641198DW.265.266D
8 100	18 600	0,32	2,12	3,15	2,07	1 640	EE641198DW.265.266D
11 400	25 500	0,35	1,92	2,86	1,88	–	M274149DW.110.110D
11 400	25 500	0,35	1,92	2,86	1,88	–	Timken series: M274100
11 600	26 000	0,35	1,92	2,86	1,88	–	M274149DW.110.110D
10 500	20 300	0,39	1,73	2,58	1,69	1 730	EE531201DW.300.301D
11 000	21 700	0,39	1,73	2,58	1,69	1 850	EE531201DW.300.301D
8 200	19 800	0,33	2,07	3,09	2,03	1 770	LM274449DW.410.410D
8 200	19 800	0,33	2,07	3,09	2,03	1 770	LM274449DGW.410.410D
8 300	20 300	0,33	2,07	3,09	2,03	1 810	LM274449DW.410.410D

Tapered roller bearings

Four-row,
in inch sizes

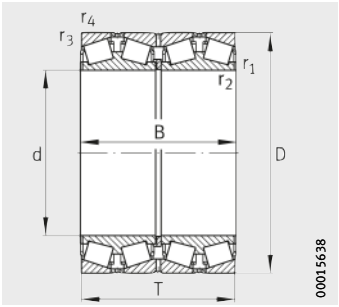

Design 1
With sheet steel cages

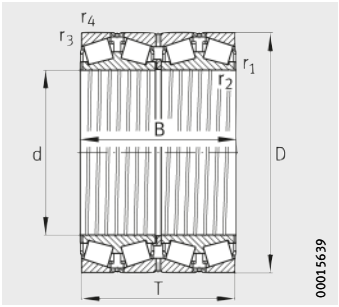

Design 2
With sheet steel cages

Dimension table (continued) · Dimensions in mm

Designation	Design	Mass	Dimensions					
		m	d	D	T	B	r_1, r_2	r_3, r_4
		≈kg					min.	min.
F-802148.TR4-H122BD	1	734	**519,112**	736,6	536,575	536,575	3,3	6,4
F-802210.TR4	1	451	**520,7**	711,2	400,05	400,05	3,3	6,4
F-802038.TR4	1	800	**536,575**	761,873	558,8	558,8	3,3	6,4
F-802038.TR4-M	3	836	**536,575**	761,873	558,8	558,8	3,3	6,4
F-802102.TR4	1	363	**558,8**	736,6	322,268	322,265	3,3	6,4
F-802102.TR4-M	3	376	**558,8**	736,6	322,268	322,265	3,3	6,4
F-802093.TR4	1	466	**558,8**	736,6	409,575	409,575	3,3	6,4
F-802093.TR4-M	3	486	**558,8**	736,6	409,575	409,575	3,3	6,4
Z-521179.TR4	1[1)]	530	**558,8**	736,6	457,2	455,612	3,3	6,4
F-802049.TR4	1	974	**571,5**	812,8	593,725	593,725	3,3	6,4
F-802049.TR4-M	3	1 030	**571,5**	812,8	593,725	593,725	3,3	6,4
F-802090.TR4	1	470	**584,2**	762	401,638	396,875	3,3	6,4
F-802090.TR4-M	3	483	**584,2**	762	401,638	396,875	3,3	6,4
Z-535868.TR4	1	1 500	**584,2**	901,7	539,747	584,2	3,2	9,7
F-802198.TR4-H122AA	2	589	**585,788**	771,525	479,425	479,425	3,3	6,4
F-802198.TR4-M	3	610	**585,788**	771,525	479,425	479,425	3,3	6,4
F-802185.TR4	1	1 090	**595,312**	844,55	615,95	615,95	3,3	6,4
F-802185.TR4-M	3	1 160	**595,312**	844,55	615,95	615,95	3,3	6,4
F-802075.TR4	1	1 130	**603,25**	857,25	622,3	622,3	3,3	6,4
F-802075.TR4-M-H122AA	4	1 200	**603,25**	857,25	622,3	622,3	3,3	6,4
F-802054.TR4-M-H122AB	3	463	**609,6**	787,4	361,95	361,95	3,3	6,4
F-802054.TR4-M-H122AP	3	463	**609,6**	787,4	361,95	361,95	6,4	6,4
Z-529150.TR4	4	710	**609,6**	813,562	479,425	479,425	6,4	3,3
Z-530986.TR4	3	1 270	**609,6**	863,6	660,4	660,4	3,3	6,4
Z-513141.TR4	3	1 360	**635**	901,7	654,05	654,05	3,3	6,4
F-802147.TR4-M	3	901	**646,112**	857,25	542,925	542,925	3,3	6,4
F-802183.TR4-M	3	1 840	**647,7**	1 028,7	565,15	558,8	11,2	6,4
F-802057.TR4-M-H122AA	4	1 450	**650**	915	674	674	3,6	6,1
F-802057.TR4-M-H122AB	1	462	**660**	855	319,192	318,48	4,8	9,7
F-802203.TR4-H122AA	2	398	**660,4**	812,8	365,125	365,125	3,3	6,4
F-802203.TR4-M-H122AA	4	412	**660,4**	812,8	365,125	365,125	3,3	6,4
Z-515672.TR4	3	2 210	**660,4**	1 066,8	647,703	638,175	6,4	6,4

1) Bearing with lubrication holes through the central rib of the inner ring.

2) The comparative designations were taken from documents available to us.
They give information on identical main dimensions and chamfer dimensions only.
The cage and bearing designs are not always identical.
Furthermore, the table makes no claims to completeness.

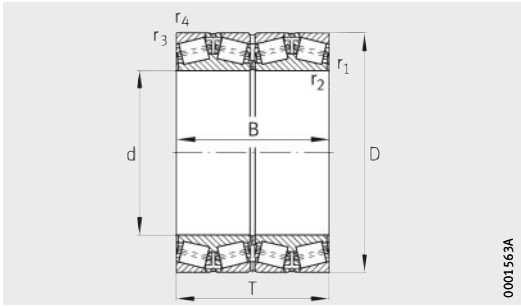

Design 3
With pin cages

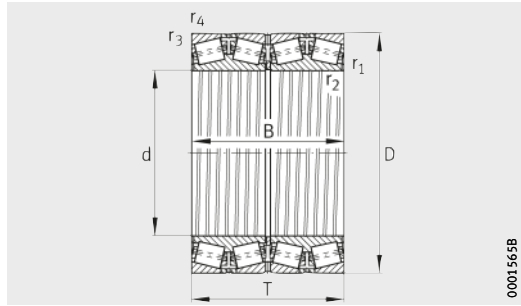

Design 4
With pin cages

Basic load ratings		Calculation factors				Fatigue limit load	Interchange designation[2)]
dyn. C_r kN	stat. C_{0r} kN	e	Y_1	Y_2	Y_0	C_{ur} kN	TQO types
11 800	27 000	0,33	2,04	3,04	2	–	M275349DW.310.310D
8 500	18 300	0,43	1,57	2,34	1,53	1 580	LM275349DW.310.310D
13 800	30 000	0,3	2,28	3,39	2,23	2 600	M276449DW.410.410D
14 200	31 000	0,3	2,28	3,39	2,23	2 650	M276449DW.410.410D
6 900	15 300	0,34	1,98	2,94	1,93	1 290	EE843221DW.290.291D
7 000	15 600	0,34	1,98	2,94	1,93	1 320	EE843221DW.290.291D
9 100	21 900	0,35	1,95	2,9	1,91	1 880	LM377449DW.410.410D
9 200	22 400	0,35	1,95	2,9	1,91	1 920	LM377449DW.410.410D
10 000	24 500	0,32	2,14	3,18	2,09	–	LM277149DA.110.110D
15 400	34 000	0,33	2,03	3,02	1,98	2 900	M278749DW.710.710D
16 100	36 000	0,33	2,03	3,02	1,98	3 050	M278749DW.710.710D
8 400	20 600	0,35	1,91	2,85	1,87	1 760	LM778549DW.510.510D
8 600	21 500	0,35	1,91	2,85	1,87	1 830	LM778549DW.510.510D
14 900	27 000	0,33	2,03	3,02	1,98	2 120	665231DW.355.356D
10 200	25 500	0,33	2,03	3,02	1,98	2 160	LM278849DW.810.810D
10 200	25 500	0,33	2,03	3,02	1,98	2 140	LM278849DW.810.810D
16 400	37 000	0,34	1,99	2,96	1,95	3 100	M280049DW.010.010D
17 200	39 500	0,34	1,99	2,96	1,95	3 300	M280049DW.010.010D
16 700	38 500	0,35	1,95	2,9	1,91	3 200	M280249DW.M210.210D
17 500	40 500	0,35	1,95	2,9	1,91	3 400	M280249DGW.210.210D
7 400	18 800	0,5	1,35	2,01	1,32	1 590	649241DW.310.311D
7 400	18 800	0,5	1,35	2,01	1,32	1 590	649242DW.310.311D
12 400	29 500	0,26	2,55	3,8	2,5	2 470	LM280249DGW.210.210D
18 100	42 500	0,35	1,95	2,9	1,91	3 500	M280349DW.310.310D
18 600	44 000	0,33	2,03	3,02	1,98	–	M281049DW.010.010D
14 500	35 500	0,33	2,03	3,02	1,98	2 950	LM281049DW.010.010D
18 000	32 500	0,31	2,16	3,22	2,12	–	EE424257DW.405.407D
18 700	45 000	0,33	2,03	3,02	1,98	3 650	M281349DGW.310.310D
7 650	17 600	0,35	1,91	2,84	1,87	–	EE749259DW.334.335D
8 200	21 400	0,33	2,03	3,02	1,98	1 780	L281149DGW.110.110D
8 400	22 200	0,33	2,03	3,02	1,98	1 850	L281149DGW.110.110D
23 100	42 500	0,31	2,15	3,2	2,1	3 200	428262DW.420.420XD

Tapered roller bearings

Four-row,
in inch sizes

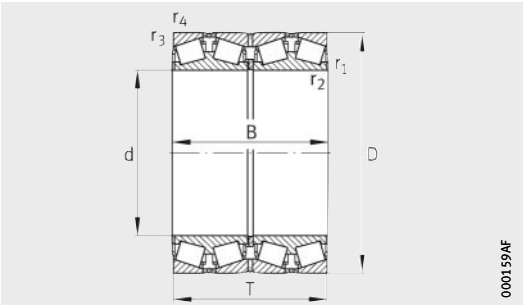

Design 1
With sheet steel cages

Dimension table (continued) · Dimensions in mm

Designation	Design	Mass	Dimensions					
		m	d	D	T	B	r_1, r_2	r_3, r_4
		≈kg					min.	min.
Z-568422.TR4	3	995	**679,45**	901,7	552,45	552,45	3,3	6,4
Z-521612.TR4	1	970	**679,45**	901,7	552,45	679,45	3,2	6,4
F-802040.TR4	1	523	**685,8**	876,3	355,6	352,425	3,3	6,4
F-802040.TR4-M	3	542	**685,8**	876,3	355,6	352,425	3,3	6,4
F-802170.TR4-M	3	1 070	**708,025**	930,275	565,15	565,15	3,3	6,4
F-802055.TR4	1	518	**711,2**	914,4	317,5	317,5	3,3	6,4
F-802055.TR4-M	3	542	**711,2**	914,4	317,5	317,5	3,3	6,4
F-802173.TR4-M-H122AB	3	1 910	**714,375**	1 016	704,85	704,85	3,3	6,4
F-802103.TR4-M	3	1 120	**717,55**	946,15	565,15	565,15	3,3	6,4
F-802103.TR4-M-H122AA	4	1 120	**717,55**	946,15	565,15	565,15	3,3	6,4
F-802182.TR4-M-H122AA	4	2 060	**730,25**	1 035,05	755,65	755,65	3,3	6,4
Z-526837.TR4	1	1 270	**749,3**	990,6	605	605	3,3	6,4
Z-527082.TR4	3	1 300	**749,3**	990,6	605	605	3,3	6,4
Z-513140.TR4	3	2 190	**749,3**	1 066,8	736,6	723,9	4,8	12,7
F-802032.TR4-M	3	2 130	**762**	1 066,8	736,6	723,9	7,9	12,7
Z-532879.TR4	3	3 110	**774,7**	1 220	838,474	774,7	6,4	12,7
Z-526416.TR4	3	3 530	**780**	1 220	838,474	838,474	6,4	12,7
F-802110.TR4-M-H122AA	4	2 590	**812,8**	1 143	768,35	768,35	6,4	12,7
F-802234.TR4-M	3	2 990	**825,5**	1 168,4	844,55	844,55	4,8	12,7
Z-514432.TR4	3	3 110	**825,5**	1 193,8	812,8	812,8	6,4	12,7
Z-528337.TR4	3	1 360	**863,6**	1 090	669,925	669,925	4,8	12,7
F-802204.TR4-M-A300-350	3	1 870	**863,6**	1 130,3	669,925	669,925	4,8	12,7
Z-561585.TR4	3	2 170	**863,6**	1 181,1	666,75	666,75	4,8	12,7
F-802247.TR4-M-H122AD	3	3 400	**863,6**	1 219,2	889	876,3	4,8	12,7
Z-521592.TR4	3	4 080	**901,7**	1 295,4	914,4	901,7	4,8	12,7
F-802139.TR4-M	3	3 170	**938,212**	1 270	825,5	825,5	4,8	12,7
Z-511781.TR4	3	4 390	**939,8**	1 333,5	952,5	952,5	4,8	12,7
Z-539519.TR4	3	2 600	**1 006,475**	1 295,4	764	764	4,8	12,7
F-802027.TR4-M	3	4 690	**1 139,825**	1 509,712	923,925	923,925	4,8	12,7
Z-523207.TR4	3	5 770	**1 200,15**	1 593,85	990,6	990,6	4,8	12,7
F-801326.TR4	4	6 920	**1 346,2**	1 729,74	1 143	1 143	4,8	12,7

[1] The comparative designations were taken from documents available to us.
They give information on identical main dimensions and chamfer dimensions only.
The cage and bearing designs are not always identical.
Furthermore, the table makes no claims to completeness.

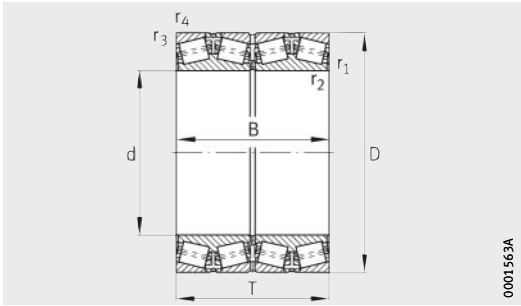

Design 3
With pin cages

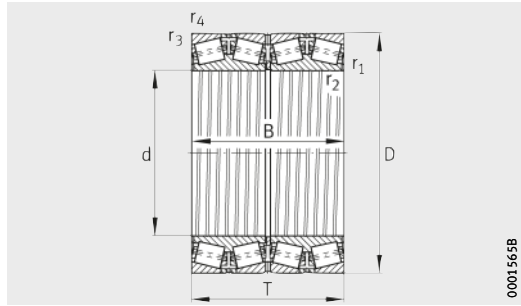

Design 4
With pin cages

Basic load ratings		Calculation factors				Fatigue limit load	Interchange designation[1)]
dyn. C_r kN	stat. C_{0r} kN	e	Y_1	Y_2	Y_0	C_{ur} kN	TQO types
13 800	35 000	0,33	2,07	3,09	2,03	2 850	LM281849DW.810.810D
13 100	32 500	0,33	2,07	3,09	2,03	2 650	LM281849DW.810.810D
7 800	19 900	0,41	1,66	2,47	1,62	1 620	EE655271DW.345.346D
8 200	21 000	0,41	1,66	2,47	1,62	1 710	EE655271DW.345.346D
15 800	41 000	0,33	2,06	3,07	2,02	3 300	LM282549DW.510.510D
7 900	19 000	0,38	1,77	2,63	1,73	1 500	EE755281DW.360.361D
8 000	19 400	0,38	1,77	2,63	1,73	1 530	EE755281DW.360.361D
23 200	53 000	0,32	2,08	3,09	2,03	–	M383240DW.210.210D
15 700	41 000	0,33	2,03	3,02	1,98	3 300	LM282847DW.810.810D
15 700	41 000	0,33	2,03	3,02	1,98	3 300	LM282847DGW.810.810D
23 600	54 000	0,33	2,03	3,02	1,98	4 200	M283449DGW.410.410D
16 600	43 500	0,34	2,01	2,99	1,97	3 450	LM283649DW.610.610D
17 400	46 500	0,34	2,01	2,99	1,97	3 700	LM283649DW.610.610D
24 600	57 000	0,34	1,98	2,95	1,94	4 400	EE325296DW.420.421D
24 200	59 000	0,33	2,03	3,02	1,98	4 500	M284148DW.111.110D
31 500	70 000	0,39	1,72	2,56	1,68	5 200	EE631305D.484.483XD
30 000	67 000	0,39	1,72	2,56	1,68	–	EE631307D.484.483XD
26 500	65 000	0,37	1,83	2,72	1,79	4 900	–
29 500	72 000	0,34	2	2,98	1,96	5 500	M285848DW.810.810D
31 000	69 000	0,39	1,72	2,56	1,68	5 100	EE631325DW.470.470D
19 200	58 000	0,26	2,55	3,8	2,5	4 450	–
22 400	60 000	0,33	2,03	3,02	1,98	4 200	LM286249DW.210.210D
22 800	58 500	0,38	1,76	2,62	1,72	–	LM286449DW.410.410D
32 000	77 000	0,33	2,03	3,02	1,98	5 800	EE547341DW.480.481D
36 500	84 000	0,32	2,12	3,15	2,07	6 100	EE634356D.510.510D
32 000	82 000	0,32	2,12	3,15	2,07	6 000	LM287649DW.610.610D
38 000	93 000	0,33	2,03	3,02	1,98	6 800	LM287849DW.810.810D
28 000	80 000	0,33	2,03	3,02	1,98	5 800	LM288249DW.210.210D
38 000	105 000	0,32	2,09	3,11	2,04	7 300	SKF BT4B 331334/HA4
46 500	129 000	0,33	2,06	3,06	2,01	–	LM288949D.910.910D
49 000	146 000	0,33	2,03	3,02	1,98	–	–

Tapered roller bearings

Four-row,
in metric sizes

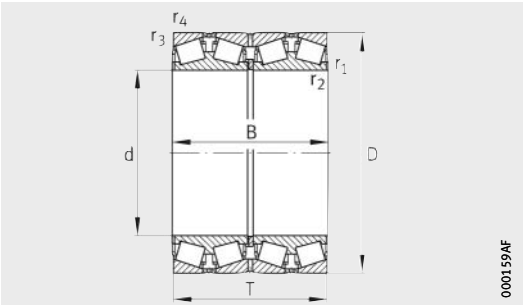

Design 1
With sheet steel cages

Dimension table · Dimensions in mm

Designation	Design	Mass	Dimensions					
		m	d	D	T	B	r_1, r_2	r_3, r_4
		≈kg					min.	min.
Z-533136.TR4	1	72,1	**190**	320	232	232	1	4
Z-512055.TR4	1	54	**205**	320	205	205	4	4
Z-567972.TR4	1	55	**220**	320	200	200	1,5	4
Z-532027.TR4	1	75	**220**	340	218	220	1,5	4
F-802105.TR4	1	100	**220**	340	305	305	4	3
F-802184.TR4	1	70	**240**	338	248	248	4	3
Z-532028.TR4	1	81	**240**	360	218	218	1	3
Z-534751.TR4	1	150	**240**	410	270	270	4	4
Z-508990.01.TR4	1	104	**245**	380	254	255,5	1	3
F-802200.TR4	1	88	**260**	368	268	268	5	5
Z-522614.TR4	1	79	**260**	380	200	200	2	5
Z-531025.TR4	1	119	**260**	400	250	250	5	5
Z-534480.TR4	1	163	**260**	400	345	345	5	5
F-802151.TR4	1	178	**260**	440	300	300	3	6
Z-574281.TR4	1	115	**280**	395	288	288	5	5
Z-548651.TR4	1	113	**280**	420	224	224	4	4
Z-532029.TR4	1	105	**280**	420	250	250	2	5
F-802132.TR4	1	167	**280**	420	345	345	5	5
Z-510039.TR4	1	197	**280**	460	324	324	6	6
Z-574613.TR4	1	156	**300**	460	248	248	5	4
F-802245.TR4	1	233	**300**	460	390	390	5	5
Z-534753.TR4	1	280	**300**	500	350	350	6	5
Z-576008.TR4	1	141	**310**	430	310	310	4	4
Z-566230.TR4	1	153	**320**	440	335	335	2	5
F-802232.TR4	1	248	**340**	520	325	325	6	5
Z-534754.TR4	1	485	**350**	590	420	420	3	6
Z-523453.TR4	2	183	**355**	490	316	316	1,5	2,5
Z-530758.TR4	1	260	**360**	510	380	380	1,5	5
Z-572344.TR4	1	267	**360**	520	370	370	3	4
Z-514166.TR4	1	270	**360**	540	325	325	6	6
Z-546304.TR4	1	282	**360**	540	340	340	4	5

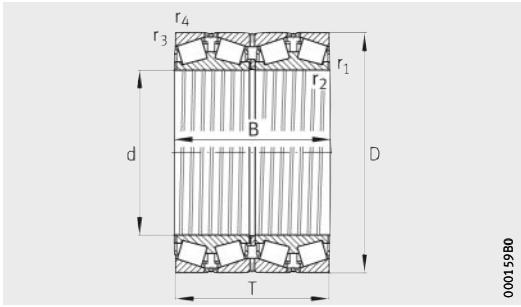

Design 2
With sheet steel cages

Basic load ratings		Calculation factors				Fatigue limit load
dyn. C_r kN	stat. C_{0r} kN	e	Y_1	Y_2	Y_0	C_{ur} kN
2 400	3 400	0,45	1,5	2,23	1,5	–
2 000	3 200	0,43	1,56	2,32	1,5	–
2 000	3 400	0,34	2	2,98	2	–
2 470	4 000	0,45	1,51	2,25	1,5	430
3 600	6 400	0,35	1,95	2,9	1,9	700
2 550	5 300	0,38	1,79	2,66	1,8	580
2 600	4 300	0,43	1,55	2,31	1,5	455
3 900	5 900	0,29	2,32	3,45	2,3	600
2 850	4 950	0,42	1,61	2,4	1,6	520
3 100	6 100	0,35	1,93	2,88	1,9	–
2 450	4 150	0,32	2,13	3,17	2,1	430
2 850	5 000	0,44	1,53	2,28	1,5	–
4 600	8 600	0,43	1,55	2,31	1,5	900
3 800	5 850	0,7	0,97	1,44	0,9	–
3 700	7 300	0,35	1,95	2,9	1,9	770
3 100	5 300	0,37	1,8	2,69	1,8	–
3 200	6 200	0,47	1,42	2,12	1,4	640
4 800	9 150	0,46	1,47	2,19	1,4	–
4 900	7 900	0,34	1,99	2,96	1,9	770
3 450	5 800	0,46	1,46	2,18	1,4	570
6 300	12 000	0,32	2,12	3,15	2,1	1 210
5 300	9 500	0,58	1,16	1,72	1,1	–
4 300	9 150	0,32	2,12	3,15	2,1	–
4 850	10 300	0,33	2,03	3,02	2	1 050
5 800	10 500	0,29	2,32	3,45	2,3	1 000
7 200	11 800	0,7	0,97	1,44	0,9	–
4 900	10 800	0,39	1,71	2,54	1,7	1 060
5 900	12 100	0,34	1,96	2,93	1,9	1 180
6 200	13 100	0,35	1,92	2,86	1,9	1 270
5 500	9 700	0,41	1,65	2,46	1,6	900
6 000	11 100	0,4	1,68	2,5	1,6	1 040

Tapered roller bearings

Four-row,
in metric sizes

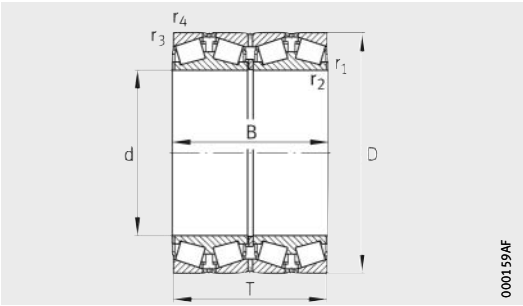

Design 1
With sheet steel cages

Dimension table (continued) · Dimensions in mm

Designation	Design	Mass	Dimensions					
		m	d	D	T	B	r_1, r_2	r_3, r_4
		≈kg					min.	min.
Z-565625.TR4	1	282	**380**	560	325	325	2,5	6
F-802109.TR4	1	296	**380**	560	360	360	1,5	5
F-802109.TR4-M	3	312	**380**	560	360	360	1,5	5
Z-523695.TR4	1	427	**380**	620	388	388	5	5
Z-510038.TR4	1	510	**380**	620	420	420	5	5
F-802205.TR4	1	183	**390**	510	350	350	1,5	3
F-802116.TR4	1	193	**395**	545	288,7	268,7	5	7,5
F-802116.TR4-H122AA	2	193	**395**	545	288,7	268,7	5	7,5
F-802074.TR4	1	177	**400**	540	280	280	5	5
Z-534284.TR4	1	365	**400**	600	355	355	3	6
Z-575106.TR4	1	327	**420**	592	432	432	6	6
Z-539120.TR4	1	370	**420**	620	355	355	4	6
Z-510036.TR4	1	1 000	**420**	760	500	500	9,5	9,5
F-802231.TR4-H122AA	2	235	**430**	570	336	336	1,5	6,4
Z-540515.TR4	3	432	**440**	620	454	454	6	6
Z-546420.TR4	1	440	**440**	620	454	454	6	6
F-802166.TR4	1	406	**440**	650	355	355	5	6
F-802063.TR4-H122AD	1[1)]	277	**450**	595	368	368	3	6
F-802223.TR4	1	278	**460**	610	360	360	2,5	5
F-802208.TR4	1	368	**460**	625	421	421	3	9
Z-537420.TR4	1	585	**460**	700	420	420	6	5
Z-549349.TR4	1	950	**460**	760	520	520	3	6
F-802021.TR4	1	242	**475**	600	368	368	2	6
F-802034.TR4	1	220	**475**	620	380	380	2	6
Z-533018.TR4	1	470	**475**	660	450	450	4	6
Z-549928.TR4	1	545	**480**	700	420	420	6	6
F-802004.TR4	1	498	**500**	670	515	515	5	5
Z-535689.TR4	3	551	**500**	680	515	515	6	6
Z-533019.TR4	1	560	**500**	680	515	515	6	6
Z-532030.TR4	1	540	**500**	720	400	400	3	6
Z-537903.TR4	1	564	**500**	720	420	420	7,5	7,5
Z-527904.TR4	1	1 250	**500**	830	570	570	9,5	9,5

1) With lubrication holes through the inner ring central rib.

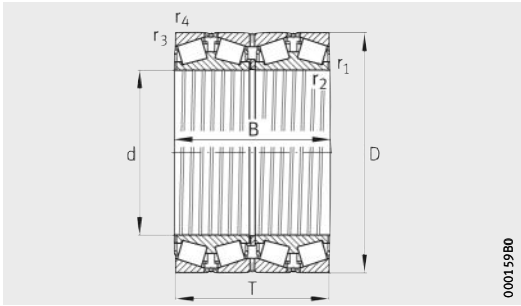

Design 2
With sheet steel cages

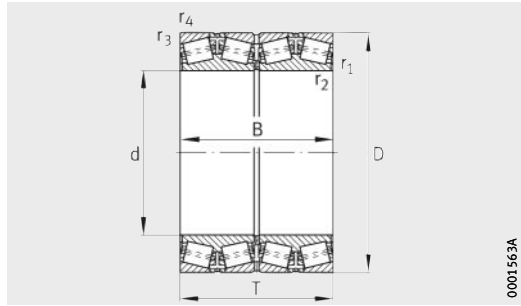

Design 3
With pin cages

Basic load ratings		Calculation factors				Fatigue limit load
dyn. C_r kN	stat. C_{0r} kN	e	Y_1	Y_2	Y_0	C_{ur} kN
5 900	11 000	0,35	1,95	2,9	1,9	1 020
6 600	12 700	0,35	1,95	2,9	1,9	1 180
6 800	13 100	0,35	1,95	2,9	1,9	1 220
7 900	13 300	0,43	1,57	2,34	1,5	1 190
8 500	14 200	0,46	1,47	2,19	1,4	1 290
5 300	12 200	0,33	2,03	3,02	2	1 180
4 150	8 500	0,47	1,43	2,12	1,4	780
4 150	8 500	0,47	1,43	2,12	1,4	780
4 150	8 500	0,47	1,43	2,12	1,4	780
6 700	13 500	0,34	1,99	2,96	1,9	1 230
8 000	17 000	0,4	1,68	2,5	1,6	1 560
6 800	12 800	0,43	1,58	2,36	1,6	1 150
12 300	20 200	0,35	1,95	2,9	1,9	1 700
5 800	13 500	0,44	1,54	2,29	1,5	1 260
9 300	20 000	0,4	1,68	2,5	1,6	1 830
9 000	19 500	0,4	1,68	2,5	1,6	1 770
7 200	13 400	0,48	1,42	2,11	1,4	–
6 800	15 900	0,33	2,03	3,02	2	1 470
6 600	14 600	0,38	1,77	2,64	1,7	1 330
8 100	18 300	0,33	2,03	3,02	2	1 660
8 800	16 600	0,43	1,56	2,32	1,5	–
12 500	22 400	0,45	1,5	2,23	1,5	–
6 300	16 000	0,26	2,55	3,8	2,5	–
7 100	17 000	0,29	2,32	3,45	2,3	–
9 300	20 500	0,37	1,8	2,69	1,8	1 830
9 150	18 000	0,32	2,11	3,14	2,1	–
9 900	23 900	0,33	2,03	3,02	2	2 130
11 100	26 000	0,29	2,32	3,45	2,3	2 310
10 700	24 600	0,29	2,32	3,45	2,3	2 190
8 800	16 800	0,46	1,48	2,2	1,5	1 440
9 300	18 800	0,33	2,04	3,04	2	1 630
14 300	25 000	0,37	1,8	2,69	1,8	–

Tapered roller bearings

Four-row,
in metric sizes

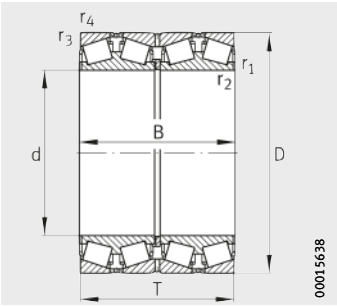

Design 1
With sheet steel cages

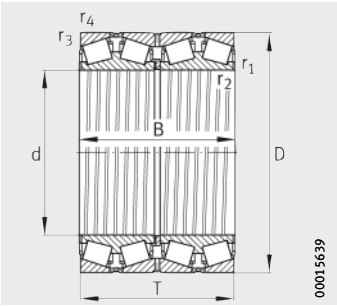

Design 2
With sheet steel cages

Dimension table (continued) · Dimensions in mm

Designation	Design	Mass	Dimensions					
		m	d	D	T	B	r_1, r_2	r_3, r_4
		≈kg					min.	min.
F-802020.TR4-H122BR	2	314	**510**	655	379	377	1,5	6,4
Z-546305.TR4	1	735	**530**	780	450	450	3	6
Z-579827.TR4	1	1 380	**530**	880	544	544	9,5	9,5
F-802005.TR4	1	810	**533**	810	450	450	7,5	7,5
Z-565904.TR4	3	786	**535**	750	560	560	7,5	7,5
F-802202.TR4	1	373	**540**	690	400	400	2,5	5
Z-518888.TR4	1	224	**560**	740	460	460	3,3	6,4
Z-539193.TR4	3	1 690	**560**	920	620	620	9,5	9,5
Z-577804.TR4	3	753	**570**	780	515	515	6	6
Z-533792.TR4	1	975	**570**	810	590	590	3	6
F-802178.TR4-H122BD	1	485	**600**	800	365	365	6	5
Z-568986.TR4	1	968	**600**	870	488	488	3	7,5
F-802250.TR4	1	460	**620**	800	365	365	2,5	5
Z-534756.TR4	1	1 130	**630**	920	515	515	9,5	9,5
F-800695.TR4	4	1 400	**635**	900	660	660	9,5	9,5
F-802141.TR4-M	3	1 850	**645**	1 030	560	560	9,5	15
F-802061.TR4-M	3	1 840	**647**	1 030	560	560	9,5	15
F-802057.TR4-M	3	1 450	**650**	915	674	674	3,6	6,1
F-802060.TR4-M	3	1 830	**650**	1 030	560	560	9,5	15
Z-510033.TR4	1	472	**660**	855	320	320	5	7,5
Z-534757.TR4	3	2 310	**660**	1 070	650	650	9,5	9,5
Z-537905.TR4	3	2 700	**670**	1 090	710	710	9,5	9,5
Z-566305.TR4	4	1 150	**676**	910	620	620	4	7,5
F-802121.TR4-AD-H122EK	2	617	**710**	900	410	410	3,3	6,4
F-802121.TR4	1	617	**710**	900	410	410	3,3	6,4
F-802121.TR4-H122BR	1	617	**710**	900	410	410	3,3	6,4
F-802121.TR4-M	3[1)]	638	**710**	900	410	410	3,3	6,4
F-802121.TR4-M-H122AA	4	638	**710**	900	410	410	3,3	6,4
F-802121.TR4-M-H122BR	3	638	**710**	900	410	410	3,3	6,4
F-802121.TR4-M-H122DZ	4	634	**710**	900	410	410	3,3	6,4

1) With plus tolerances for the bearing bore and outside diameter.

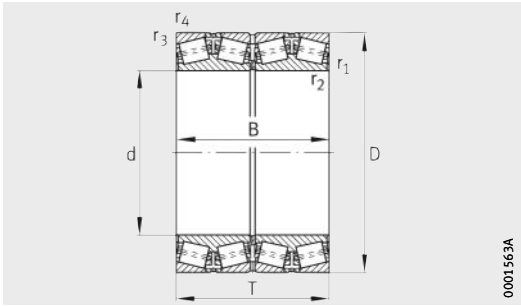

Design 3
With pin cages

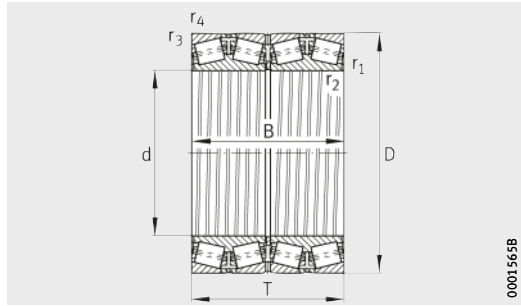

Design 4
With pin cages

Basic load ratings		Calculation factors				Fatigue limit load
dyn. C_r kN	stat. C_{0r} kN	e	Y_1	Y_2	Y_0	C_{ur} kN
7 300	18 000	0,35	1,95	2,9	1,9	1 610
11 200	21 600	0,36	1,86	2,77	1,8	–
14 300	27 500	0,46	1,47	2,19	1,4	2 240
10 600	20 600	0,37	1,82	2,71	1,8	1 720
13 000	29 000	0,35	1,95	2,9	1,9	2 500
7 800	21 200	0,37	1,8	2,69	1,8	1 870
10 000	24 500	0,32	2,14	3,18	2,1	–
18 700	34 000	0,4	1,68	2,5	1,6	2 750
12 700	29 500	0,36	1,87	2,79	1,8	2 500
14 300	32 000	0,31	2,15	3,2	2,1	2 700
8 600	18 200	0,32	2,08	3,1	2	1 500
12 900	26 000	0,43	1,57	2,34	1,5	2 090
7 500	18 300	0,37	1,83	2,73	1,8	–
14 600	29 500	0,43	1,57	2,34	1,5	2 370
18 600	44 000	0,33	2,03	3,02	2	–
18 400	34 000	0,31	2,16	3,22	2,1	2 650
18 400	34 000	0,31	2,16	3,22	2,1	2 650
18 700	45 000	0,33	2,03	3,02	2	3 650
18 400	34 000	0,31	2,16	3,22	2,1	2 650
7 700	17 800	0,35	1,91	2,84	1,9	1 440
23 100	42 500	0,31	2,15	3,2	2,1	3 200
26 000	50 000	0,29	2,32	3,45	2,3	3 800
17 400	41 500	0,37	1,8	2,69	1,8	3 400
10 400	26 500	0,35	1,95	2,9	1,9	–
10 500	26 500	0,35	1,95	2,9	1,9	2 140
10 500	26 500	0,35	1,95	2,9	1,9	2 140
10 600	27 000	0,35	1,95	2,9	1,9	2 180
10 600	27 000	0,35	1,95	2,9	1,9	2 180
10 600	27 000	0,35	1,95	2,9	1,9	2 180
10 600	27 000	0,35	1,95	2,9	1,9	2 180

Tapered roller bearings

Four-row,
in metric sizes

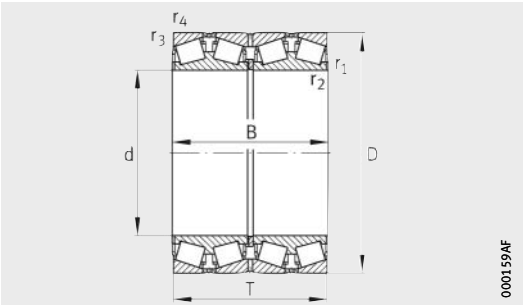

Design 1
With sheet steel cages

Dimension table (continued) · Dimensions in mm

Designation	Design	Mass	Dimensions					
		m	d	D	T	B	r_1, r_2	r_3, r_4
		≈kg					min.	min.
F-802263.TR4-M-H122AA	4	895	**730**	940	500	500	3	6
F-802033.TR4-M	3	712	**750**	950	410	410	6	6
Z-572275.TR4	3	2 540	**750**	1 130	690	690	9,5	9,5
Z-581213.TR4	3	4 110	**750**	1 220	840	840	12	12
Z-533277.TR4	1	1 300	**785**	1 040	560	560	6	12
Z-549321.TR4	3	2 870	**840**	1 170	840	840	6	6
Z-522129.TR4	3	5 290	**850**	1 360	910	910	5	9,5
Z-525433.TR4	3	605	**935**	1 150	710	710	3	6
Z-533780.TR4	3	4 250	**950**	1 360	880	880	12	12
Z-531009.TR4	3	3 820	**1 000**	1 333,5	952,5	952,5	4,8	12,7
F-802070.01.TR4-M	3[1)]	3 690	**1 070**	1 400	889,6	890	5,1	13,2
Z-577801.TR4	3	5 150	**1 320**	1 760	800	800	7,5	12
Z-521936.TR4	4	6 700	**1 370**	1 765	1 050	1 035	5	12
Z-543378.TR4	3	7 300	**1 400**	1 820	1 160	1 160	6,4	12,7
Z-533447.TR4	3	9 840	**1 500**	1 950	1 230	1 230	12	12
Z-534898.TR4	3	7 870	**1 600**	1 950	1 230	1 230	12	6
Z-535133.TR4	3	11 500	**1 600**	2 060	1 300	1 300	12	12
Z-535105.TR4	3	16 960	**1 600**	2 240	1 300	1 300	7,5	15

1) Bearing with four outer rings.

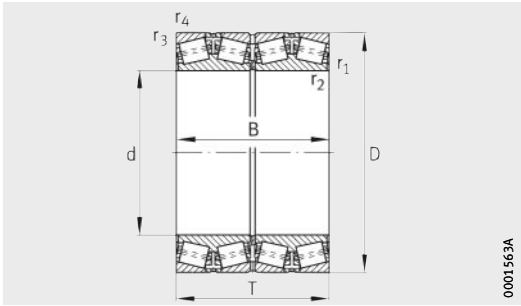

Design 3
With pin cages

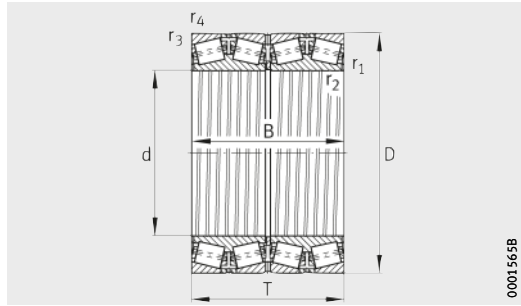

Design 4
With pin cages

Basic load ratings		Calculation factors				Fatigue limit load
dyn. C_r kN	stat. C_{0r} kN	e	Y_1	Y_2	Y_0	C_{ur} kN
14 400	36 500	0,35	1,95	2,9	1,9	2 950
11 400	29 000	0,35	1,95	2,9	1,9	–
24 300	49 000	0,49	1,38	2,06	1,4	3 650
32 500	64 000	0,32	2,12	3,15	2,1	–
16 300	42 000	0,41	1,63	2,43	1,6	3 300
30 000	72 000	0,29	2,31	3,44	2,3	–
39 000	78 000	0,32	2,12	3,15	2,1	–
22 800	69 500	0,26	2,55	3,8	2,5	–
36 500	85 000	0,37	1,8	2,69	1,8	6 100
33 500	98 000	0,35	1,95	2,9	1,9	7 200
32 500	91 500	0,36	1,87	2,79	1,8	–
38 500	97 000	0,35	1,95	2,9	1,9	6 400
51 000	152 000	0,33	2,03	3,02	2	10 100
51 000	151 000	0,38	1,78	2,65	1,7	9 900
64 000	190 000	0,32	2,12	3,15	2,1	12 300
57 000	215 000	0,26	2,55	3,8	2,5	13 900
73 000	225 000	0,26	2,55	3,8	2,5	14 200
81 500	212 000	0,4	1,68	2,5	1,6	–



Tapered roller bearings

Four-row,
sealed on both sides

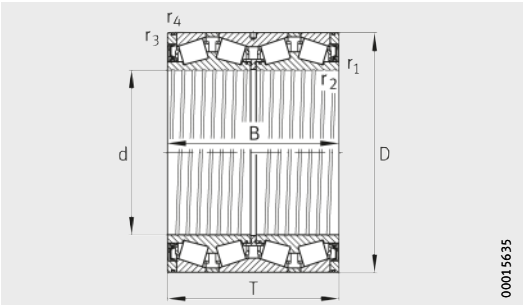

Design 5
With sheet steel cages

Dimension table · Dimensions in mm

Designation	Design	Mass	Dimensions			
		m	d	D	T	B
		≈kg				
F-802160.TR4	5	79	**216,103**	330,2	269,875	263,525
Z-576479.TR4	5	164	**228,6**	400,05	296,875	296,875
Z-573745.TR4	5	52	**234,95**	327,025	196,85	196,85
F-802190.TR4	5	69	**241,478**	349,148	228,6	228,6
F-802082.TR4	5	42,5	**244,475**	327,025	193,675	193,675
F-802192.TR4-H122AE	5	123	**244,475**	381	304,8	304,8
F-802066.TR4	5	83	**254**	358,775	269,875	269,875
Z-578395.TR4	6	180	**260,35**	422,275	317,5	314,325
F-802011.TR4	5	60,4	**266,7**	355,6	228,6	230,188
F-802011.TR4-H122AE	5[1)]	60,6	**266,7**	355,6	228,6	230,188
Z-573688.TR4	5	115	**266,7**	393,7	269,878	269,878
Z-580961.TR4	5	84	**273,05**	381	244,475	244,475
F-802193.TR4-H122AE	5[1)]	100	**276,225**	393,7	269,878	269,878
Z-575940.TR4	5	106	**279,4**	393,7	269,878	269,878
F-802101.TR4-A250-300	5	74	**285,75**	380,898	244,475	244,475
F-802096.TR4	5	117	**288,925**	406,4	298,45	298,45
F-802071.TR4-H122AG	5	128	**304,648**	438,048	279,4	280,99
F-802079.TR4	5	104	**304,8**	419,1	269,875	269,875
Z-577249.TR4	5	106	**304,902**	412,648	266,7	266,7
F-802025.TR4	5	98,6	**304,902**	412,648	266,7	266,7
F-802025.TR4-H122AF	5	98,1	**304,902**	412,648	266,7	266,7
Z-567640.TR4	7	113	**304,902**	412,648	266,7	336,55
F-802072.TR4-H122AG	5	128	**305,003**	438,048	279,4	280,99
F-802081.TR4-H122AE	5[1)]	102	**317,5**	422,275	269,875	269,875
Z-581035.TR4	5	168	**317,5**	447,675	327,025	327,025
F-802068.TR4	5	97	**330,302**	438,023	254	247,65
Z-576210.TR4	5	193	**333,375**	469,9	342,9	342,9
F-802108.TR4-H122AG	5	109	**341,312**	457,098	254	254
Z-578862.TR4	5	119	**343,052**	457,098	254	254
F-802003.TR4-H122AF	5	108	**343,052**	457,098	254	254
F-802003.TR4-H122AG	5	108	**343,052**	457,098	254	254
F-802025.TR4-H122BJ	5[1)]	108	**343,052**	457,098	254	254
F-802029.TR4	5	208	**346,075**	488,95	358,775	358,775

1) Without helical grooves in the inner ring bore.

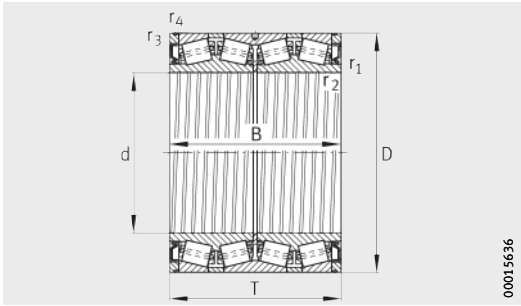

Design 6
With pin cages

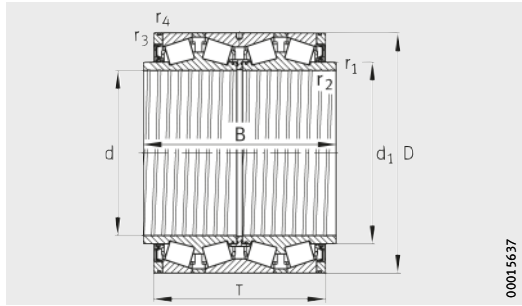

Design 7
With sheet steel cages

			Basic load ratings		Calculation factors				Fatigue limit load
r_1, r_2	r_3, r_4	d_1	dyn. C_r	stat. C_{0r}	e	Y_1	Y_2	Y_0	C_{ur}
min.	min.		kN	kN					kN
1,5	3,3	–	2 200	3 750	0,55	1,24	1,84	1,21	–
3,3	3,3	–	3 800	5 500	0,33	2,02	3	1,97	560
1,5	3,3	–	1 620	2 900	0,46	1,48	2,2	1,45	295
1,5	3,3	–	2 120	3 650	0,37	1,8	2,69	1,76	–
1,5	3,3	–	1 470	2 700	0,47	1,43	2,12	1,4	255
3,3	4,8	–	3 450	5 700	0,45	1,51	2,24	1,47	–
1,5	3,3	–	2 700	5 100	0,35	1,95	2,9	1,91	540
6,4	3,3	–	3 900	6 200	0,33	2,03	3,02	1,98	630
1,5	2	–	2 190	4 400	0,36	1,87	2,79	1,83	470
1,5	2	–	2 190	4 400	0,36	1,87	2,79	1,83	470
1,5	3,3	–	3 000	5 400	0,45	1,49	2,22	1,46	560
1,5	3,3	–	2 500	4 900	0,43	1,57	2,34	1,53	500
1,5	3,3	–	3 000	5 400	0,45	1,49	2,22	1,46	560
1,5	3,3	–	3 000	5 400	0,45	1,49	2,22	1,46	560
1,5	3,3	–	2 600	5 300	0,43	1,56	2,33	1,53	–
3,3	3,3	–	3 600	6 950	0,35	1,95	2,9	1,91	–
3,3	3,3	–	3 550	6 300	0,47	1,43	2,12	1,4	630
3,3	6,4	–	3 150	5 900	0,49	1,38	2,06	1,35	600
3,3	2	–	2 800	5 500	0,52	1,31	1,95	1,28	560
3,3	3,3	–	3 050	6 100	0,32	2,12	3,15	2,07	620
3,3	3,3	–	3 050	6 100	0,32	2,12	3,15	2,07	620
3,3	3,3	330,2	3 050	6 100	0,32	2,12	3,15	2,07	620
3,3	3,3	–	3 550	6 300	0,47	1,43	2,12	1,4	630
1,5	3,3	–	3 050	6 500	0,32	2,12	3,15	2,07	660
3,3	3,3	–	4 250	8 500	0,33	2,03	3,02	1,98	–
1,5	3,3	–	2 700	5 300	0,43	1,57	2,34	1,53	520
3,3	3,3	–	4 750	9 500	0,34	1,97	2,93	1,92	–
1,5	3,3	–	3 000	6 000	0,47	1,43	2,12	1,4	590
1,5	3,3	–	2 600	5 200	0,7	0,97	1,44	0,94	500
1,5	3,3	–	3 000	6 000	0,47	1,43	2,12	1,4	590
1,5	3,3	–	3 000	6 000	0,47	1,43	2,12	1,4	590
1,5	3,3	–	3 000	6 000	0,47	1,43	2,12	1,4	–
3,3	3,3	–	5 000	10 100	0,32	2,12	3,16	2,08	990

Tapered roller bearings

Four-row,
sealed on both sides

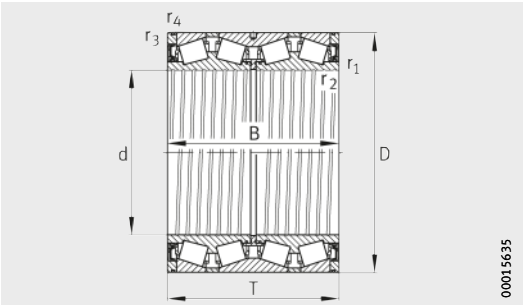

Design 5
With sheet steel cages

Dimension table (continued) · Dimensions in mm

Designation	Design	Mass	Dimensions			
		m	d	D	T	B
		≈kg				
F-802023.TR4	5	137	**355,6**	482,6	269,875	265,112
Z-575032.TR4	7	152	**355,6**	482,6	269,875	330,2
F-802111.TR4	5	177	**355,6**	488,95	317,5	317,5
Z-579769.TR4	5	255	**368,3**	523,875	382,588	382,588
F-802015.TR4	5	175	**385,762**	514,35	317,5	317,5
Z-573326.TR4	5	192	**406,4**	546,1	288,925	268,288
F-802039.TR4	5	182	**406,4**	546,1	288,925	288,925
F-802078.TR4	5	209	**409,575**	546,1	334,962	334,962
Z-576306.TR4	5	382	**415,925**	590,55	434,975	434,975
F-802046.TR4-M	6	385	**415,925**	590,55	434,975	434,975
Z-564363.TR4	5	180	**431,8**	571,5	279,4	279,4
F-802013.TR4-M	6	230	**431,8**	571,5	336,55	336,55
F-802044.TR4	5	359	**440**	590	480	480
F-800917.TR4	5	378	**440**	650	353,05	353,05
Z-574347.TR4	5	229	**444,5**	571,5	355,6	355,6
Z-575857.TR4	6	470	**447,675**	635	463,55	463,55
F-802180.TR4	5	275	**450**	595	368	368
F-802188.TR4	5	196	**457,2**	596,9	279,4	276,225
F-802042.TR4-M-H122AF	6	201	**457,2**	596,9	279,4	276,225
F-802167.TR4	5	286	**460**	610	360	360
Z-572067.TR4	5	574	**479,425**	679,45	495,3	495,3
F-802007.TR4-H122BH	5[1)]	233	**482,6**	615,95	330,2	330,2
F-802007.TR4-H122AG	5	233	**482,6**	615,95	330,2	330,2
Z-579990.TR4	5[2)]	246	**482,6**	615,95	330,2	330,2
F-802260.TR4-H122DN-J44-W72D	5	274	**482,6**	615,95	385	385
F-802112.TR4	5	283	**482,6**	615,95	400	400
F-802143.TR4-H122AG	7	245	**482,6**	615,95	330,2	406,4
F-802149.TR4	7	273	**482,6**	615,95	377,825	406,4
F-802149.TR4-H122AF	7	272	**482,6**	615,95	377,825	406,4
Z-564537.TR4	7	247	**482,6**	615,95	330,2	419,1
Z-579576.TR4	5	251	**482,6**	615,95	402,05	419,1
F-802267.TR4	5	250	**489,026**	634,873	320,675	320,675

1) Without helical grooves in the inner ring bore.

2) Bearing with lubrication holes through the inner ring central rib.

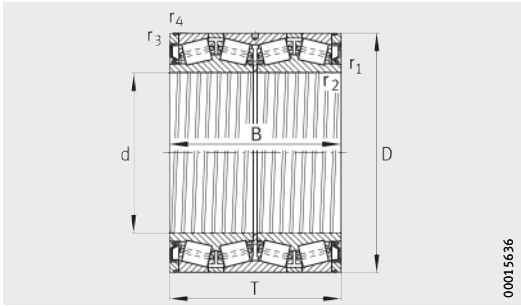

Design 6
With pin cages

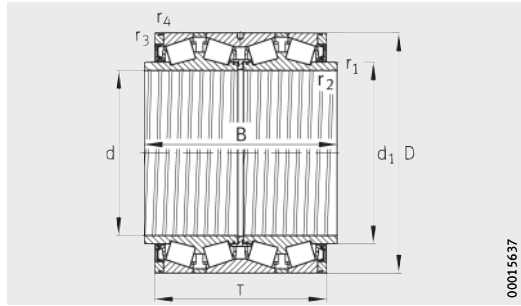

Design 7
With sheet steel cages

			Basic load ratings		Calculation factors				Fatigue limit load
r_1, r_2	r_3, r_4	d_1	dyn. C_r	stat. C_{0r}	e	Y_1	Y_2	Y_0	C_{ur}
min.	min.		kN	kN					kN
1,5	3,3	–	3 150	6 400	0,49	1,36	2,03	1,33	620
1,5	3,3	381	3 150	6 400	0,49	1,36	2,03	1,33	620
1,5	3,3	–	4 450	9 400	0,32	2,11	3,14	2,06	920
3,3	6,4	–	5 900	11 900	0,32	2,12	3,15	2,07	1 140
3,3	3,3	–	4 400	9 300	0,44	1,52	2,26	1,49	890
1,5	6,4	–	3 500	6 700	0,49	1,38	2,06	1,35	570
0,9	6,4	–	3 900	7 800	0,48	1,41	2,1	1,38	710
1,5	6,4	–	5 000	10 800	0,4	1,69	2,52	1,65	1 010
–	6,4	–	7 100	15 000	0,52	1,31	1,95	1,28	1 390
2,3	6,4	–	7 500	15 600	0,34	1,97	2,94	1,93	1 440
1,5	3,3	–	3 900	7 600	0,62	1,1	1,63	1,07	670
1,5	3,3	–	4 800	10 500	0,46	1,48	2,21	1,45	980
3	5	–	7 800	18 400	0,35	1,95	2,9	1,91	1 710
5	6	–	6 300	11 400	0,37	1,8	2,69	1,76	–
3,3	18,7X25°	–	5 400	12 900	0,35	1,95	2,9	1,91	–
3,3	6,4	–	8 500	18 000	0,35	1,95	2,9	1,91	1 620
3	3	–	5 600	13 600	0,29	2,31	3,44	2,26	1 260
1,5	3,3	–	3 700	7 700	0,47	1,43	2,12	1,4	640
1,5	3,3	–	3 800	8 200	0,61	1,11	1,66	1,09	740
2,5	5	–	5 600	12 900	0,39	1,72	2,57	1,69	–
3,3	3,3	–	9 900	20 900	0,35	1,92	2,86	1,88	1 850
6,4	3,3	–	5 200	12 300	0,36	1,87	2,79	1,83	1 110
6,4	3,3	–	5 200	12 200	0,36	1,87	2,79	1,83	–
6,4	3,3	–	5 200	12 200	0,36	1,87	2,79	1,83	–
6,4	6,4	–	6 000	15 000	0,35	1,95	2,9	1,91	–
6,4	6,4	–	6 300	15 800	0,31	2,21	3,29	2,16	1 440
4	3,3	514,35	5 200	12 300	0,36	1,87	2,79	1,83	1 110
4	3,3	514,35	5 800	14 300	0,31	2,21	3,29	2,16	1 300
4	3,3	514,35	5 800	14 300	0,31	2,21	3,29	2,16	1 300
3,3	6,4	514,35	5 200	12 300	0,36	1,87	2,79	1,83	1 110
3,3	3,3	–	5 400	14 000	0,37	1,83	2,72	1,79	1 280
3,3	3,3	–	5 200	11 600	0,43	1,57	2,34	1,53	–

Tapered roller bearings

Four-row,
sealed on both sides

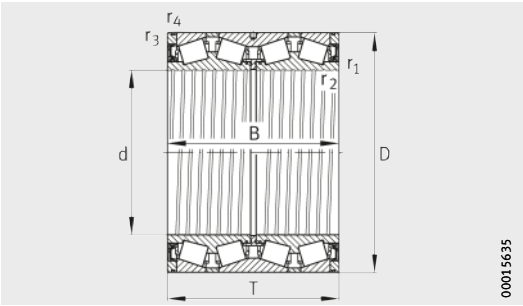

Design 5
With sheet steel cages

Dimension table (continued) · Dimensions in mm

Designation	Design	Mass	Dimensions			
		m	d	D	T	B
		≈kg				
Z-577346.TR4	5	632	**501,65**	711,2	520,7	520,7
Z-574472.TR4	5	732	**519,113**	736,6	536,575	536,575
F-802152.TR4	5	356	**540**	690	400	400
Z-575848.TR4	5	371	**558,8**	736,6	322,263	322,263
F-802080.TR4	5	512	**558,8**	736,6	457,2	455,612
Z-574859.TR4	5	480	**584,2**	762	401,638	396,875
F-802186.TR4	5	586	**585,788**	771,525	479,425	479,425
F-802186.TR4-M	6	594	**585,788**	771,525	479,425	479,425
F-802171.01.TR4	5	1 130	**595,312**	844,55	615,95	615,95
Z-578717.TR4	6	820	**600**	850	450	450
F-802043.TR4-H122AG	5	426	**609,6**	787,4	361,95	361,95
Z-573689.TR4	5	695	**609,6**	813,562	479,425	479,425
Z-580638.TR4	6	1 360	**635**	901,7	624,05	654,05
Z-572660.TR4	6	1 530	**657,225**	933,45	676,275	676,275
Z-575037.TR4	5	970	**679,45**	901,7	552,45	552,45
F-802087.TR4-M	6	522	**685,8**	876,3	355,6	352,425
Z-574473.TR4	6	1 060	**708,025**	930,275	565,15	565,15
F-802095.TR4	5	570	**710**	900	410	410
F-802095.TR4-M	6	600	**710**	900	410	410
F-802031.TR4	5	507	**711,2**	914,4	317,5	317,5
F-802031.TR4-M	6	523	**711,2**	914,4	317,5	317,5
Z-567922.TR4	7	575	**711,2**	914,4	317,5	425,45
Z-565250.TR4	6	2 190	**749,3**	1 066,8	736,6	723,9
F-802069.TR4-M-H122BU	6	2 640	**863,6**	1 169,987	844,55	844,55
Z-576211.TR4	6	3 360	**863,6**	1 219,2	889	876,3

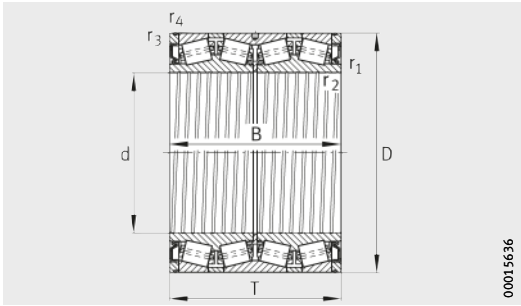

Design 6
With pin cages

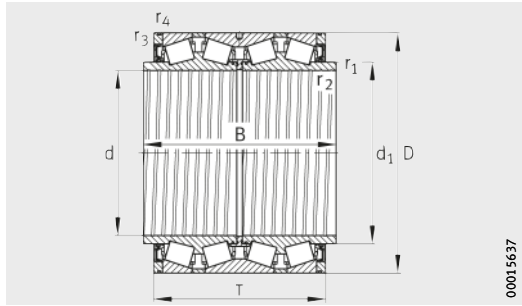

Design 7
With sheet steel cages

			Basic load ratings		Calculation factors				Fatigue limit load
r_1, r_2	r_3, r_4	d_1	dyn. C_r	stat. C_{0r}	e	Y_1	Y_2	Y_0	C_{ur}
min.	min.		kN	kN					kN
3,3	6,4	–	10 600	22 400	0,37	1,8	2,69	1,76	1 960
3,3	6,4	–	11 500	25 000	0,33	2,03	3,02	1,98	2 180
2,5	5	–	6 950	17 000	0,37	1,8	2,69	1,76	–
3,3	6,4	–	5 800	12 500	0,35	1,95	2,9	1,91	1 040
3,3	6,4	–	9 000	21 600	0,35	1,95	2,9	1,91	–
3,3	6,4	–	7 900	17 800	0,47	1,43	2,12	1,4	1 510
3,3	6,4	–	9 500	22 700	0,35	1,95	2,9	1,91	1 920
3,3	6,4	–	9 800	23 800	0,35	1,95	2,9	1,91	2 010
3,3	6,4	–	12 900	32 000	0,38	1,78	2,66	1,75	–
5	7,5	–	9 700	20 000	0,32	2,12	3,15	2,07	1 620
3,3	6,4	–	7 100	16 200	0,4	1,68	2,5	1,64	1 340
6,4	3,3	–	10 500	24 500	0,35	1,95	2,9	1,91	2 040
3,3	6,4	–	16 800	38 000	0,33	2,03	3,02	1,98	3 100
3,3	6,4	–	17 800	40 000	0,35	1,95	2,9	1,91	3 250
3,3	6,4	–	13 500	33 000	0,33	2,03	3,02	1,98	2 700
3,3	6,4	–	7 400	17 000	0,4	1,68	2,5	1,64	1 350
3,3	6,4	–	14 000	35 500	0,33	2,03	3,02	1,98	2 850
3,3	6,4	–	9 100	20 600	0,37	1,8	2,69	1,76	1 640
3,3	6,4	–	9 400	21 600	0,37	1,8	2,69	1,76	1 710
3,3	6,4	–	5 850	14 000	0,37	1,8	2,69	1,76	–
3,3	6,4	–	6 000	14 300	0,37	1,8	2,69	1,76	–
3,3	6,4	767	7 900	19 000	0,38	1,77	2,63	1,73	1 500
25,4X20°	9,7	–	22 200	49 500	0,35	1,95	2,9	1,91	3 750
4,8	12,7	–	25 000	64 000	0,37	1,84	2,74	1,8	4 750
4,8	12,7	–	29 000	68 000	0,35	1,95	2,9	1,91	5 100

Tapered roller bearings

Four-row,
with extended inner rings

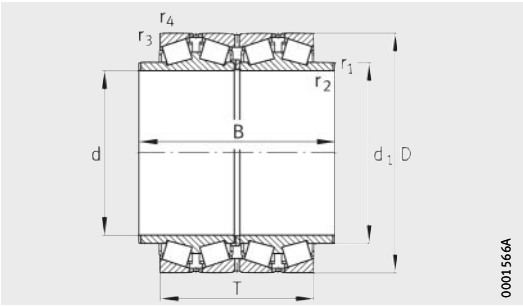

Dimension table · Dimensions in mm

Designation	Mass	Dimensions				
	m	d	D	T	B	d_1
	≈kg					
F-802176.TR4	98	**273,05**	381	244,475	304,8	304,8
Z-547044.TR4	89,5	**279,578**	380,898	244,475	304,8	304,8
Z-522458.TR4	82	**285,75**	380,898	244,475	314,475	300
Z-549895.TR4	111	**304,902**	412,648	266,7	336,55	330,2
Z-572368.TR4	126	**343,052**	457,098	254	323,85	365,13
F-802120.TR4	110	**355,6**	457,2	252,412	323,85	374,65
Z-547043.TR4	150	**355,6**	482,6	269,875	330,2	381
Z-544260.TR4	190	**355,6**	488,95	317,5	381	381
Z-564155.TR4	154	**374,65**	501,65	260,35	323,85	400,05
Z-541941.TR4	210	**431,8**	571,5	279,4	368,3	457,2
Z-548232.TR4	245	**431,8**	571,5	336,55	412,75	454,03
Z-574289.TR4	220	**444,5**	571,5	317,5	355,6	469,9
Z-548641.TR4	199	**482,6**	615,95	330,2	406,4	514,35
F-802059.TR4-H122AB	261	**482,6**	615,95	330,2	419,1	514,35
Z-548234.TR4	680	**501,65**	711,2	520,7	603,25	539,75
Z-548233.TR4	838	**536,575**	761,873	558,8	638,175	577,85
Z-561017.TR4	625	**585,788**	771,525	479,425	555,625	622,3
Z-523039.TR4	551	**685,8**	876,3	355,6	457,2	736,6
F-802041.TR4-M[1)]	588	**685,8**	876,3	355,6	457,2	736,6
Z-532479.TR4[2)]	588	**711,2**	914,4	317,5	425,45	774,7

1) With pin cages.

2) Helical grooves in the inner ring bores.

		Basic load ratings		Calculation factors				Fatigue limit load
r_1, r_2	r_3, r_4	dyn. C_r	stat. C_{0r}	e	Y_1	Y_2	Y_0	C_{ur}
min.	min.	kN	kN					kN
1,5	3,3	2 600	6 100	0,42	1,6	2,39	1,57	650
1,5	3,3	2 600	6 100	0,42	1,6	2,39	1,57	650
1,5	3,3	2 600	6 100	0,42	1,6	2,39	1,57	650
6,4	3,3	3 650	7 700	0,32	2,12	3,15	2,07	790
1,5	3,3	3 450	7 100	0,47	1,43	2,12	1,4	–
1,5	3,3	3 450	8 100	0,32	2,12	3,15	2,07	810
1,5	3,3	3 550	7 900	0,45	1,51	2,25	1,48	770
1,5	3,3	4 900	10 800	0,39	1,71	2,54	1,67	1 060
1,5	3,3	3 750	7 600	0,47	1,43	2,12	1,4	730
1,5	3,3	4 650	9 600	0,55	1,24	1,84	1,21	890
1,5	6,4	5 800	13 500	0,44	1,54	2,29	1,5	1 260
1,5	3,3	5 400	12 900	0,35	1,95	2,9	1,91	1 200
4,1	6,4	5 400	14 000	0,37	1,83	2,72	1,79	1 280
3,6	6,4	5 400	14 000	0,37	1,83	2,72	1,79	1 280
3,3	6,4	11 400	25 500	0,35	1,92	2,86	1,88	–
3,3	6,4	13 800	30 000	0,3	2,28	3,39	2,23	2 600
3,3	6,4	10 200	25 500	0,33	2,03	3,02	1,98	2 160
3,3	6,4	7 800	19 900	0,41	1,66	2,47	1,62	1 620
3,3	6,4	8 200	21 000	0,41	1,66	2,47	1,62	1 710
8,1	6,4	7 400	19 100	0,38	1,77	2,63	1,73	1 520



FAG

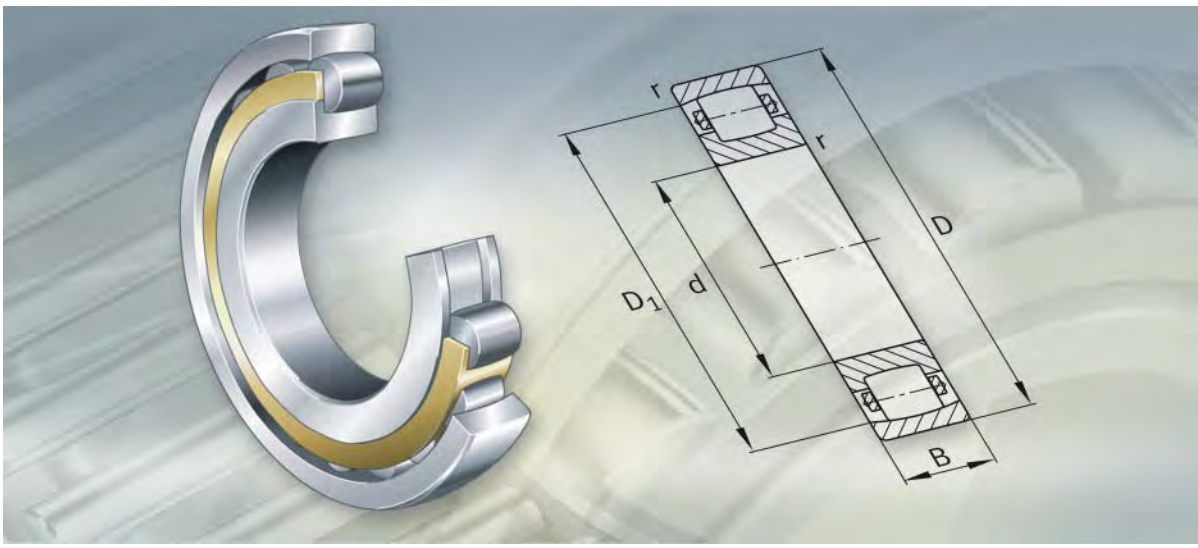

Barrel roller bearings

Barrel roller bearings

		Page
Product overview	Barrel roller bearings	596
Features	With tapered bore and with adapter sleeve	597
	Sealing	597
	Lubrication	597
	Compensation of angular misalignments	597
	Operating temperature	597
	Cages	597
	Suffixes	597
Design and safety guidelines	Equivalent dynamic bearing load	598
	Equivalent static bearing load	598
	Minimum radial load	598
	Speeds	598
	Design of bearing arrangements	599
Accuracy	Radial internal clearance of bearings with cylindrical bore	599
	Radial internal clearance of bearings with tapered bore	599
Dimension tables	Barrel roller bearings, cylindrical or tapered bore	600
	Barrel roller bearings with adapter sleeve	602



Cylindrical bore

202, 203



Tapered bore

202..-K, 203..-K



With adapter sleeve

202..-K + H, 203..-K + H

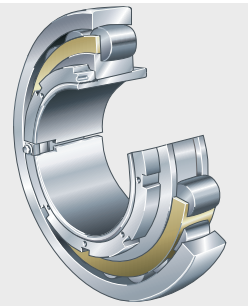

Barrel roller bearings

Features

Barrel roller bearings are single row, self-aligning roller bearings.

They comprise solid outer rings with a concave raceway, solid inner rings with two ribs and a cylindrical or tapered bore as well as barrel rollers with cages. The bearings are not separable.

Barrel roller bearings are particularly suitable where high radial shock type loads occur and misalignments must be compensated, see section Compensation of angular misalignments.

They have only a low axial load carrying capacity.

With tapered bore and with adapter sleeve

Bearings with a tapered bore have the bore taper 1:12 and the suffix K.

These bearings are also available with an adapter sleeve for location. The adapter sleeves are included in the dimension tables and must be specified in addition when ordering.

Sealing

Barrel roller bearings are not sealed.

Lubrication

The bearings can be lubricated from the end faces using oil or grease.

Compensation of angular misalignments

Under normal operating conditions and with a rotating inner ring, barrel roller bearings can swivel approx. 4° about their central position. As a result, they permit skewing between the inner and outer ring and can thus compensate misalignments, shaft deflections and housing deformations.

If the outer ring rotates or the inner ring undergoes tumbling motion, the angular adjustment facility is smaller.
In this case, please contact us.

Operating temperature

Barrel roller bearings with brass cages can be used at operating temperatures from –30 °C to +150 °C.

Bearings with an outside diameter of more than 120 mm are dimensionally stable up to +200 °C.

Cages

Barrel roller bearings with solid brass cages have the suffix MB. The cages are guided on the inner ring.

Suffixes

Suffixes for available designs: see table.

Available designs

Suffix	Description	Design
C3	Radial internal clearance larger than normal	Standard for tapered bore
K	Tapered bore	Standard
MB	Solid brass cage	



Design and safety guidelines

Equivalent dynamic bearing load

The equivalent dynamic load P is valid for bearings that are subjected to radial and axial dynamic loads. It gives the same rating life as the combined bearing load occurring in practice.

For bearings under dynamic loading, the following applies:

$$P = F_r + 9{,}5 \cdot F_a$$

P kN
Equivalent dynamic bearing load for combined load

F_a kN
Axial dynamic bearing load

F_r kN
Radial dynamic bearing load.

Equivalent static bearing load

The equivalent static load P_0 is valid for bearings that are subjected to radial and axial static loads. It induces the same load at the centre point of the most heavily loaded contact point between the rolling element and raceway as the combined bearing load occurring in practice.

For bearings under static loading, the following applies:

$$P_0 = F_{0r} + 5 \cdot F_{0a}$$

P_0 kN
Equivalent static bearing load for combined load

F_{0a} kN
Axial static bearing load

F_{0r} kN
Radial static bearing load.

Minimum radial load

In order to ensure slippage-free operation, the bearings must be subjected to a minimum radial load. This applies particularly in the case of high speeds and high accelerations. In continuous operation, roller bearings with cage must therefore be subjected to a minimum radial load of the order of $P/C_r > 0{,}02$.

Speeds

ISO 15 312 does not give thermal reference speeds for barrel roller bearings.

The dimension tables therefore only state limiting speeds n_G. These values are for oil lubrication and must not be exceeded.

Design of bearing arrangements

Shaft and housing tolerances

Recommended shaft tolerances for radial bearings with cylindrical bore, see table, page 130.

Recommended housing tolerances for radial bearings, see table, page 131.

Mounting dimensions

The dimension tables give the maximum dimensions of the radii r_a and the diameters of the abutment shoulders D_a and d_a.

Bearings with a tapered inner ring bore are:

- located either directly on a tapered shaft seat or
- located on a cylindrical shaft seat using an adapter sleeve, locknut and tab washer.

If high axial forces are present, a support ring can be used. For mounting, attention must be paid to the dimensions of the support ring, see dimension tables.

Accuracy

The main dimensions of the bearings correspond to DIN 635-1. The dimensional and running tolerances correspond to tolerance class PN to DIN 620-2.

Radial internal clearance of bearings with cylindrical bore

The radial internal clearance corresponds to internal clearance group CN to DIN 620-4.

Radial internal clearance

Bore d mm		Radial internal clearance							
		C2 µm		CN µm		C3 µm		C4 µm	
over	incl.	min.	max.	min.	max.	min.	max.	min.	max.
140	160	20	40	40	65	65	95	95	125
160	180	25	45	45	70	70	100	100	130
180	225	30	50	50	75	75	105	105	135
225	250	35	55	55	80	80	110	110	140
250	280	40	60	60	85	85	115	115	145

Radial internal clearance of bearings with tapered bore

Bearings with a tapered bore correspond to internal clearance group C3 to DIN 620-4.

Radial internal clearance

Bore d mm		Radial internal clearance							
		C2 µm		CN µm		C3 µm		C4 µm	
over	incl.	min.	max.	min.	max.	min.	max.	min.	max.
140	160	40	65	65	95	95	125	125	155
160	180	45	70	70	100	100	130	130	160
180	225	50	75	75	105	105	135	135	165
225	250	55	80	80	110	110	140	140	170
250	280	60	85	85	115	115	145	145	175



Barrel roller bearings

Cylindrical or tapered bore

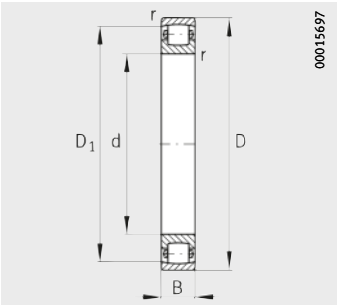

Cylindrical bore

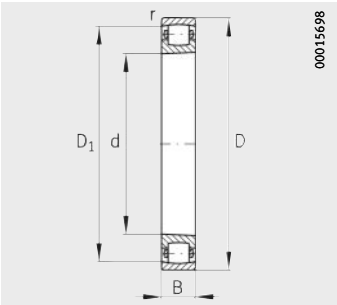

Tapered bore
K = taper 1:12

Dimension table · Dimensions in mm

Designation	Mass	Dimensions				
	m	d	D	B	r	D_1
	≈kg				min.	≈
20330-K-MB-C3	26,6	**150**	320	65	4	275,8
20330-MB	26,9	**150**	320	65	4	275,8
20332-K-MB-C3	31,3	**160**	340	68	4	293,6
20332-MB	31,7	**160**	340	68	4	293,6
20334-K-MB-C3	37,1	**170**	360	72	4	311,4
20334-MB	37,5	**170**	360	72	4	311,4
20236-K-MB-C3	18,1	**180**	320	52	4	284,3
20236-MB	18,4	**180**	320	52	4	284,3
20336-K-MB-C3	42,8	**180**	380	75	4	329,2
20336-MB	43,3	**180**	380	75	4	329,2
20238-K-MB-C3	22,2	**190**	340	55	4	301,2
20238-MB	22,5	**190**	340	55	4	301,2
20338-K-MB-C3	49,3	**190**	400	78	5	347,1
20338-MB	49,8	**190**	400	78	5	347,1
20240-K-MB-C3	26,4	**200**	360	58	4	319
20240-MB	26,7	**200**	360	58	4	319
20340-K-MB-C3	55,6	**200**	420	80	5	364,1
20340-MB	56,2	**200**	420	80	5	364,1
20244-K-MB-C3	36,9	**220**	400	65	4	353,5
20244-MB	37,4	**220**	400	65	4	353,5
20344-K-MB-C3	72,7	**220**	460	88	5	399,4
20344-MB	73,6	**220**	460	88	5	399,4
20248-K-MB-C3	49,9	**240**	440	72	4	388
20248-MB	50,5	**240**	440	72	4	388
20348-K-MB-C3	93,1	**240**	500	95	5	434,9
20348-MB	94,2	**240**	500	95	5	434,9
20252-K-MB-C3	67,4	**260**	480	80	5	421,3
20252-MB	68,2	**260**	480	80	5	421,3
20352-K-MB-C3	119	**260**	540	102	6	467,4
20352-MB	119	**260**	540	102	6	467,4
20256-K-MB-C3	70,5	**280**	500	80	5	443,6
20256-MB	71,3	**280**	500	80	5	443,6

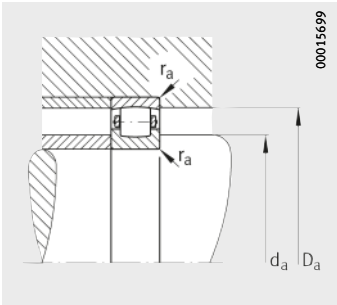

Mounting dimensions

Mounting dimensions			Basic load ratings		Fatigue limit load	Limiting speed
d_a	D_a	r_a	dyn. C_r	stat. C_{0r}	C_{ur}	n_G
min.	max.	max.	kN	kN	kN	min^{-1}
167	303	3	720	950	74	1 200
167	303	3	720	950	74	1 200
177	323	3	800	1 060	82	1 000
177	323	3	800	1 060	82	1 000
187	343	3	880	1 180	91	950
187	343	3	880	1 180	91	950
197	303	3	585	850	74	1 000
197	303	3	585	850	74	1 000
197	363	3	965	1 290	100	950
197	363	3	965	1 290	100	950
207	323	3	640	950	81	950
207	323	3	640	950	81	950
210	380	4	1 040	1 400	109	900
210	380	4	1 040	1 400	109	900
217	343	3	735	1 080	91	950
217	343	3	735	1 080	91	950
220	400	4	1 080	1 460	116	850
220	400	4	1 080	1 460	116	850
237	383	3	880	1 320	109	850
237	383	3	880	1 320	109	850
240	440	4	1 290	1 760	136	750
240	440	4	1 290	1 760	136	750
257	423	3	1 060	1 600	129	750
257	423	3	1 060	1 600	129	750
260	480	4	1 530	2 120	157	700
260	480	4	1 530	2 120	157	700
280	460	4	1 270	1 930	148	700
280	460	4	1 270	1 930	148	700
286	514	5	1 800	2 550	185	670
286	514	5	1 800	2 550	185	670
300	480	4	1 290	2 000	157	670
300	480	4	1 290	2 000	157	670



Barrel roller bearings

With adapter sleeve

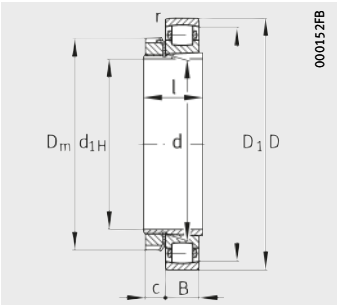

With tab washer
$d_{1H} < 200$ mm

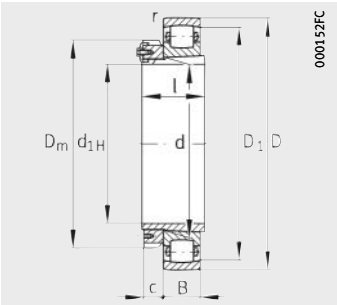

With retaining bracket
$d_{1H} \geqq 200$ mm

Dimension table · Dimensions in mm

Designation		Mass m		Dimensions								
Bearing	Adapter sleeve	Bearing ≈kg	Adapter sleeve ≈kg	d_{1H}	d	D	B	r min.	D_1 ≈	D_m ≈	l	c ≈
20330-K-MB-C3	**H3130**	26,6	5,6	**135**	150	320	65	4	275,8	195	111	26
20332-K-MB-C3	**H3132**	31,3	7,81	**140**	160	340	68	4	293,6	210	119	28
20334-K-MB-C3	**H3134**	37,1	8,52	**150**	170	360	72	4	311,4	220	122	29
20236-K-MB-C3	**H3036**	18,1	7,18	**160**	180	320	52	4	284,3	210	109	30
20336-K-MB-C3	**H3036**	42,8	7,18	**160**	180	380	75	4	329,2	210	109	30
20238-K-MB-C3	**H3038**	22,2	7,8	**170**	190	340	55	4	301,2	220	112	31
20338-K-MB-C3	**H3038**	49,3	7,8	**170**	190	400	78	5	347,1	220	112	31
20240-K-MB-C3	**H3040**	26,4	9,5	**180**	200	360	58	4	319	240	120	32
20340-K-MB-C3	**H3040**	55,6	9,5	**180**	200	420	80	5	364,1	240	120	32
20244-K-MB-C3	**H3044X**	36,9	10,5	**200**	220	400	65	4	353,5	260	126	30
20344-K-MB-C3	**H3044X**	72,7	10,5	**200**	220	460	88	5	399,4	260	126	30
20248-K-MB-C3	**H3048**	49,9	13,8	**220**	240	440	72	4	388	290	133	34
20348-K-MB-C3	**H3048**	93,1	13,8	**220**	240	500	95	5	434,9	290	133	34
20252-K-MB-C3	**H3052X**	67,4	16	**240**	260	480	80	5	421,3	310	145	34
20352-K-MB-C3	**H3052X**	119	16	**240**	260	540	102	6	467,4	310	145	34
20256-K-MB-C3	**H3056**	70,5	18,5	**260**	280	500	80	5	443,6	330	152	38

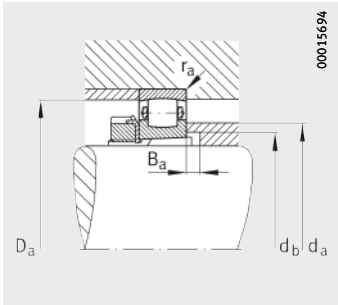

Mounting dimensions
With tab washer

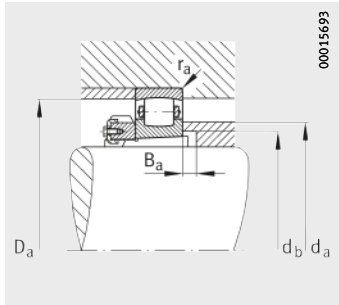

Mounting dimensions
With retaining bracket

Mounting dimensions					Basic load ratings		Fatigue limit load	Limiting speed
d_a	D_a	d_b	B_a	r_a	dyn. C_r	stat. C_{0r}	C_{ur}	n_G
max.	max.	min.	min.	max.	kN	kN	kN	min^{-1}
191	303	160	23	3	720	950	74	1 200
203	323	170	26	3	800	1 060	82	1 000
215	343	180	24	3	880	1 180	91	950
215	303	189	30	3	585	850	74	1 000
227	363	189	7	3	965	1 290	100	950
228	323	199	30	3	640	950	81	950
239	380	199	6	4	1 040	1 400	109	900
240	343	210	34	3	735	1 080	91	950
252	400	210	12	4	1 080	1 460	116	850
265	383	231	37	3	880	1 320	109	850
277	440	231	14	4	1 290	1 760	136	750
290	423	251	31	3	1 060	1 600	129	750
301	480	251	8	4	1 530	2 120	157	700
316	460	272	37	4	1 270	1 930	148	700
328	514	272	15	5	1 800	2 550	185	670
334	480	292	38	4	1 290	2 000	157	670

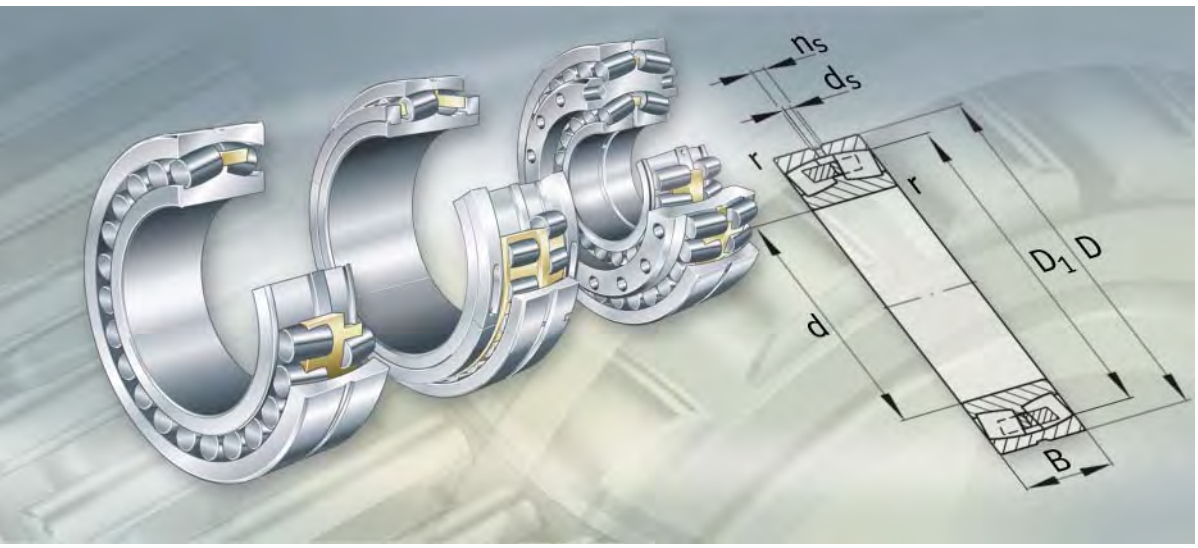

Spherical roller bearings

With cylindrical or tapered bore
Split
Triple ring bearings



Spherical roller bearings

Spherical roller bearings 608

Standard bearings with standardised main dimensions and designations can support axial loads from both sides as well as radial loads and can compensate for angular misalignments. Some sizes are of the X-life design.

Standard spherical roller bearings with a cylindrical ① or a tapered bore ② to ④ are used, for example, in gearboxes, tube mills, jaw crushers, belt conveyors and paper machinery.

Standard bearings with the suffix T41A (~D) are designed specially for the conditions in vibratory machinery.

Sealed special bearings ⑧ have been developed for use in continuous casting plant. These bearings with the designation F-8..PRL have the same main dimensions as standardised spherical roller bearings.

Special bearings of dimension series ⑤ for work rolls in cold pilger rolling machines have a tapered bore and reinforced cages. Their designations (Z-5..241..-A-K30) are not standardised.

Special bearings for light section lines ⑥ are designed for a loose fit on the roll journal. These bearings with main dimensions in the series 231, 240 and 241 have non-standardised designations (Z-5).

Special bearings ⑦ with main dimensions in series 249 and a cylindrical or tapered bore are used for the trunnion bearing arrangement in converters. Their designations (Z-5..249) are not standardised.

Split spherical roller bearings 702

Split cylindrical roller bearings are used in bearing positions that can only be accessed with difficulty, for example on cranked and very long shafts. These bearings are normally used to replace unsplit spherical roller bearings with adapter sleeves.

In the standard design ⑨, the locking rings are integrated in the inner rings.

Where there are large temperature differences between the shaft and the inner ring halves, bearings with separate locking rings ⑩ and ⑪ are used.

Split spherical roller bearings have non-standardised designations.

Triple ring bearings 722

Triple ring bearings ⑫ to ⑭ have been specially developed for deflection compensating rolls in paper machinery. In one design, the inner and outer bearings are spherical roller bearings, in two other designs either the inner or the outer bearing is a spherical roller bearing and the other bearing is a cylindrical roller bearing. The dimensions and designations of these special bearings (Z-5..04.DRGL) are not standardised.

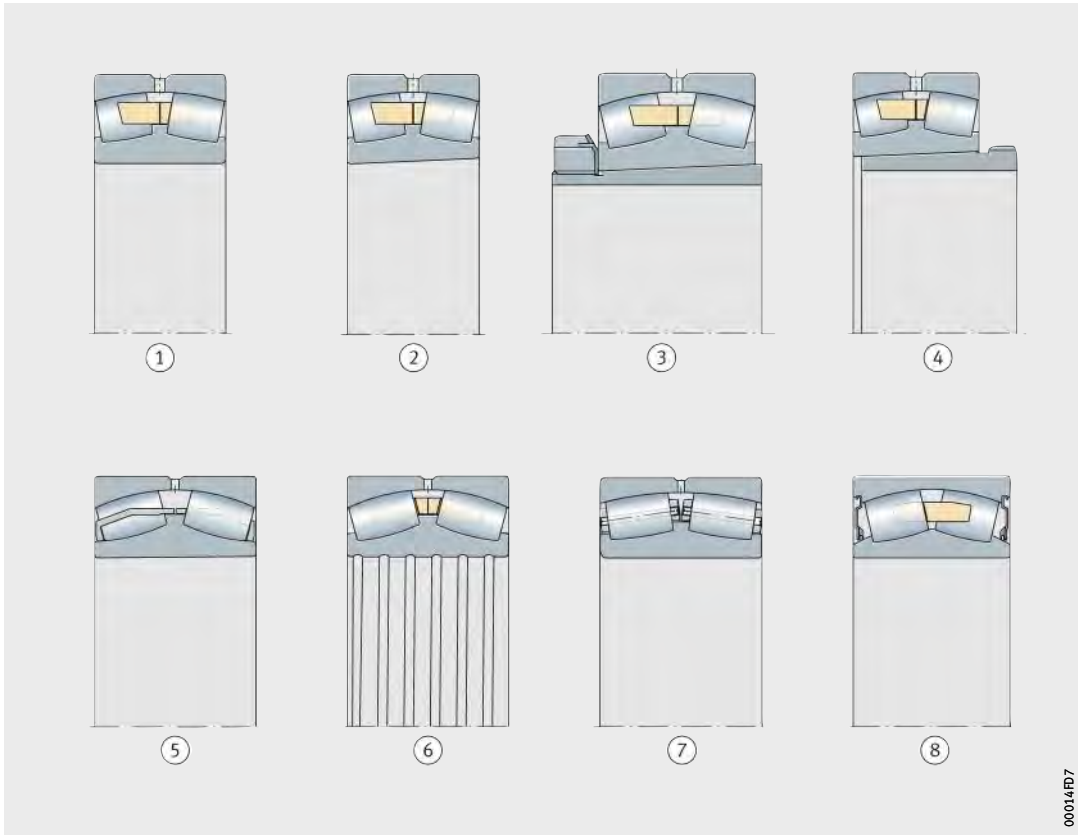
1
2
3
4
5
6
7
8
00014FD7

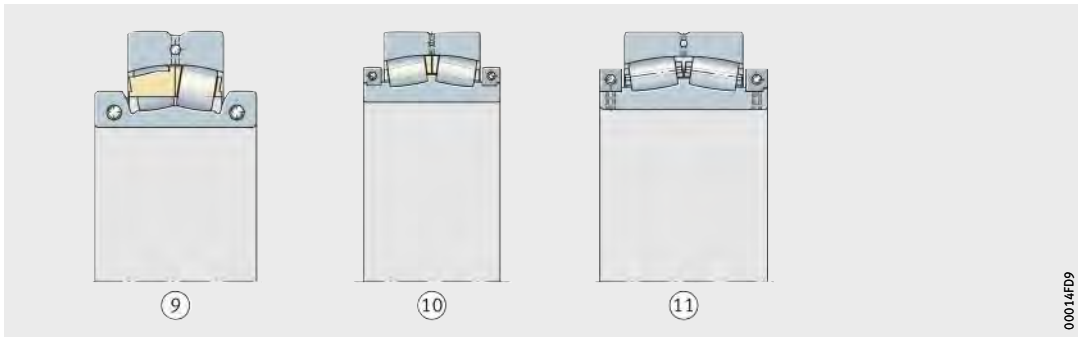
9
10
11
00014FD9

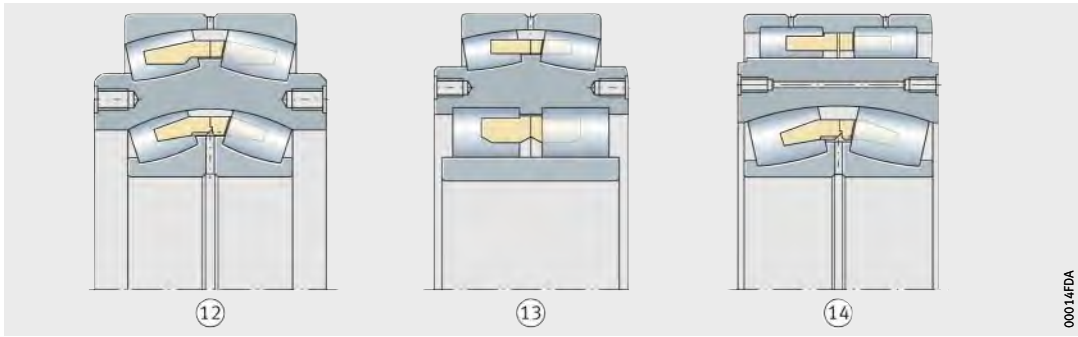
12
13
14
00014FDA

FAG

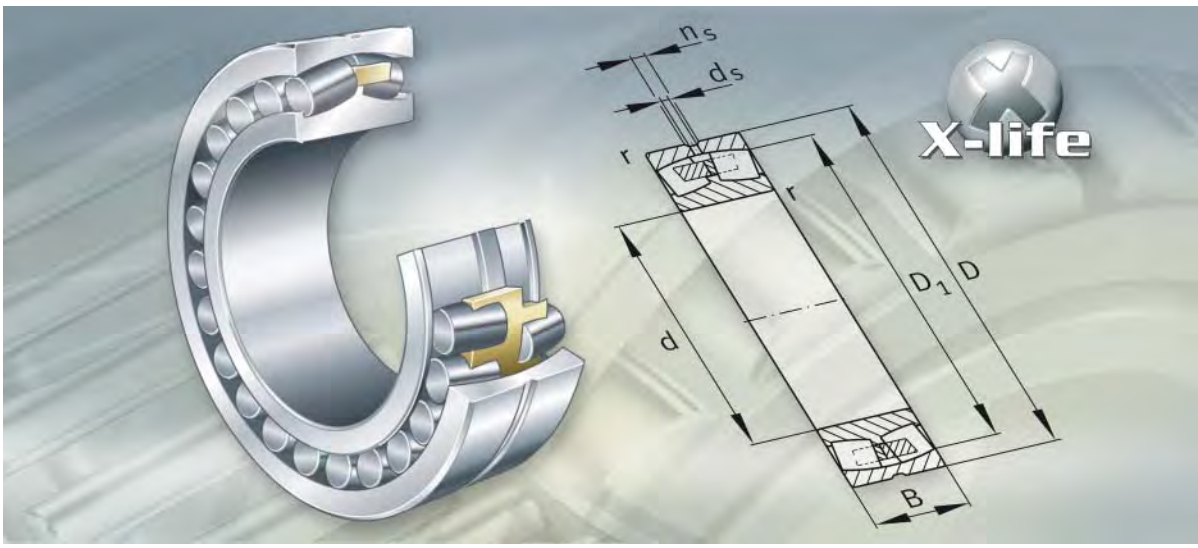

Spherical roller bearings

Spherical roller bearings

		Page
Product overview	Spherical roller bearings	610
Features	X-life	612
	Radial and axial load capacity	612
	Compensation of angular misalignments	612
	Spherical roller bearings with cylindrical bore	613
	Spherical roller bearings with tapered bore	613
	Sealing	613
	Lubrication	613
	Special spherical roller bearings	614
	Operating temperature	617
	Cages	617
	Suffixes	620
Design and safety guidelines	Equivalent dynamic bearing load	621
	Equivalent static bearing load	621
	Static load safety factor for converter bearings	622
	Minimum radial load	623
	Axial load carrying capacity	623
	Speeds	623
	Design of bearing arrangements	623
Accuracy	Tolerances for bearings to specification T41A and T41D	626
	Radial internal clearance of bearings with cylindrical bore	626
	Radial internal clearance of bearings with tapered bore	627
Dimension tables	Spherical roller bearings, cylindrical or tapered bore	628
	Spherical roller bearings with adapter sleeve	670
	Spherical roller bearings with withdrawal sleeve	684
	Special spherical roller bearings with tapered bore, for work rolls in cold pilger rolling machines	696
	Special spherical roller bearings with cylindrical bore, for light section lines, with loose fit on the roll journal	698
	Special spherical roller bearings, bearings of dimension series 49, with sleeve, for converters	700



Cylindrical bore
Open (sealed)

222, 223, 230, 231, 232, 233..-A, 238, 239, 240, 241, 248, 249, Z-5..231, Z-5..232, Z-5..240, Z-5..241, Z-5..249, F-8..231, F-8..240, F-8..PRL-01, F-8..PRL-02

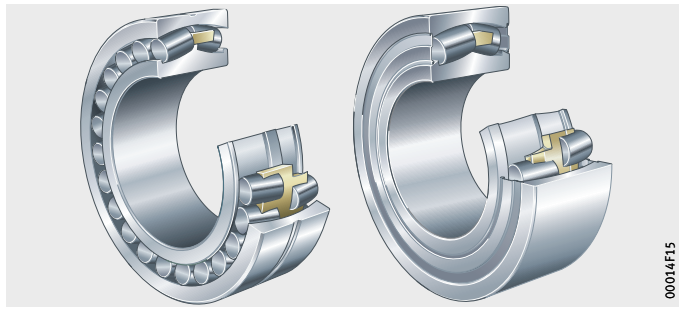

E1 design

222..-E1, 223..-E1, 231..-E1A, 232..-E1A, 241..-E1

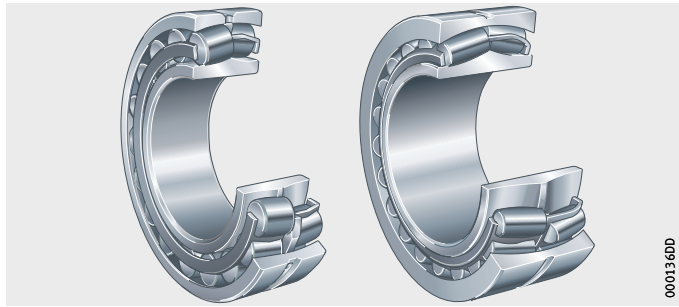

Tapered bore

222..-K, 223..-K, 230..-K, 231..-K, 232..-K, 238..-K, 239..-K, 240..-K30, 241..-K30, 248..-K30, 249..-K30, Z-5..241..-A-K30, F-8..241..-A-K30

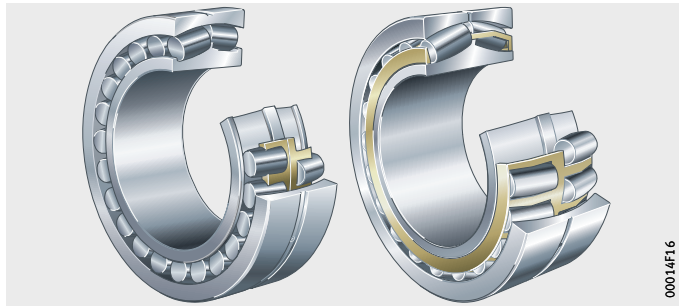

E1 design

222..-E1-K, 223..-E1-K, 231..-E1A-K, 232..-E1A-K, 241..-E1-K30

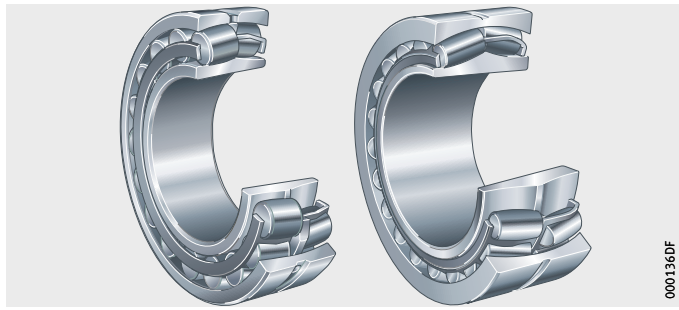

With adapter sleeve

222..-K + H, 223..-K + H, 230..-K + H, 231..-K + H, 232..-K + H, 239..-K + H, 240..-K30 + H, 241..-K30 + H, 248..-K30 + H, 249..-K30 + H

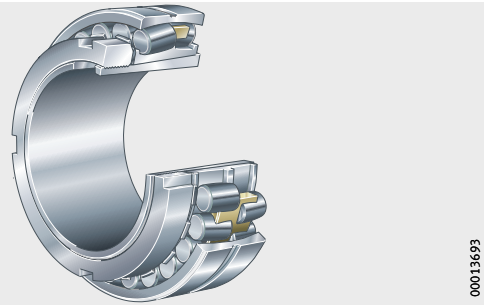

E1 design

222..-E1-K + H, 223..-E1-K + H, 231..-E1A-K + H, 232..-E1A-K + H, 241..-E1-K30 + H

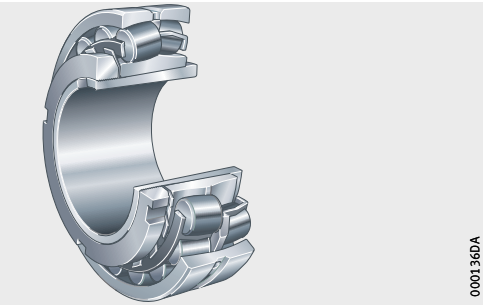

With withdrawal sleeve

222..-K + AH, 223..-K + AH, 230..-K + AH, 231..-K + AH, 232..-K + AH, 238..-K + AH, 239..-K + AH, 240..-K30 + AH, 241..-K30 + AH, 248..-K30 + AH, Z-5..249..-K30 + Z-5..KH

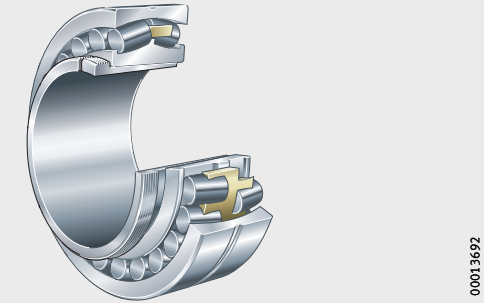

E1 design

222..-E1-K + AH, 223..-E1-K + AH, 231..-E1A-K + AH, 232..-E1A-K + AH, 241..-E1-K30 + AH

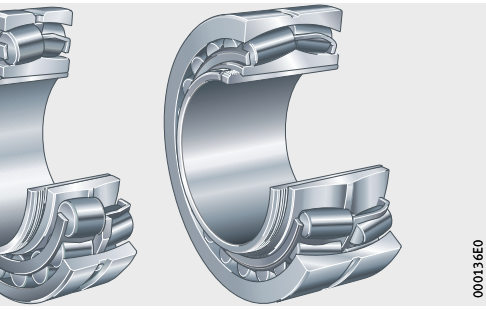

Spherical roller bearings

Features

Spherical roller bearings are double row, self-retaining units comprising solid outer rings with a concave raceway, solid inner rings and barrel rollers with cages.

The inner rings have cylindrical or tapered bores.

The symmetrical barrel rollers orient themselves freely on the concave outer ring raceway. As a result, shaft flexing and misalignment of the bearing seats are compensated, see section Compensation of angular misalignments.

X-life

Some sizes of standard spherical roller bearings are of the X-life design. These bearings have improved kinematics and optimised surfaces, are made from higher performance materials and do not have a rigid central rib.

As a result, the basic dynamic load rating and, under identical operating conditions, the basic rating life of the bearings is significantly improved. In certain applications, this means that a smaller bearing arrangement can be designed.

X-life spherical roller bearings have the suffix E1 and are indicated in the dimension tables.

Radial and axial load capacity

Spherical roller bearings can support axial forces in both directions and high radial forces. They are designed for very high load carrying capacity and, since they have the maximum possible number of large and particularly long barrel rollers, are also suitable for the heaviest loads.

Due to the narrow osculation between the rollers and raceways, uniform stress distribution is achieved in the bearing.

Compensation of angular misalignments

Spherical roller bearings compensate for angular misalignments. The permissible adjustment angle is stated for loads $P < 0{,}1 \cdot C_r$, see table.

These adjustment angles are permissible if:

- the angular deviation is constant (static angular misalignment)
- the rotating component is the inner ring.

Reduced adjustment angle

If the rotating component is the outer ring, the inner ring undergoes tumbling motion or the adjustment angles are larger than stated in the table, the angular adjustment facility is smaller. If such applications are present, please contact us.

Adjustment angle

Series	Adjustment angle °
222, 222..-E1, 230, 239, 240, 241..-E1	1,5
223, 223..-E1, 231, 231..-E1A, 232, 232..-E1A, 233..-A, 241	2

Special bearings for converters permit static angular misalignments of up to 10′.

Spherical roller bearings with cylindrical bore

Spherical roller bearings of all series are available with inner rings having a cylindrical bore.

Spherical roller bearings with tapered bore

Spherical roller bearings are also available, with the exception of series 233..-A, with inner rings having a tapered bore.
Bearings with the suffix K have the bore taper 1:12, bearings of series 240, 241, 248 and 249 have the bore taper 1:30 and the suffix K30.
Special bearings for converters with a tapered bore also have the taper 1:30.

Spherical roller bearings with adapter sleeve or withdrawal sleeve

Spherical roller bearings with a tapered bore are also available with an adapter sleeve, locknut and tab washer or with a withdrawal sleeve. Adapter and withdrawal sleeves must be ordered in addition to the bearing.

Sealing

We can by agreement supply sealed and greased bearings.
Such designs are used for continuous casting plant, light section lines, pumps, gearboxes and conveying equipment.

Lubrication

Open spherical roller bearings can be lubricated with oil or grease.

Standardised spherical roller bearings have a circumferential groove and three lubrication holes in the outer ring for lubrication.



If shafts with a vertical axis are supported using spherical roller bearings, particular attention must be paid to ensuring the reliable provision of lubricant. In such cases, oil lubrication should be used.



Special spherical roller bearings

In addition to spherical roller bearings with standardised dimensions and standardised designations, we can also supply bearings specially designed for particular applications.

Bearings for vibratory machinery

Special spherical roller bearings of series 223..-E1, 223..-A and 233..-A with the suffix T41A (~D) are matched to the particularly difficult conditions in vibratory machinery.
The bearings must be able to support not only high loads and speeds but also accelerations and centrifugal forces.
They are suitable for dynamic angular misalignments up to 0,15°.
The diameter tolerances are restricted and the radial internal clearance is C4. Spherical roller bearings of series 223..-E1 have sheet steel cages that are guided on the outer ring and have a special surface treatment. Spherical roller bearings of series 223..-A and 233..-A are fitted with solid brass cages guided on the outer ring.

Bearings for continuous casting plant

Sealed spherical roller bearings were developed in particular for use in continuous casting plant in order to reduce grease consumption, *Figure 1*.

They are interchangeable with open bearings since they have the same main dimensions. The bearing inner ring does not have a central rib. The bearings are fitted with a solid brass cage.

The seals made from fluoro elastomer and the grease can be used at temperatures up to +180 °C. The bearings are dimensionally stable up to +200 °C. They have an increased radial internal clearance to C4.

Observe the safety guidelines on materials containing fluoride.

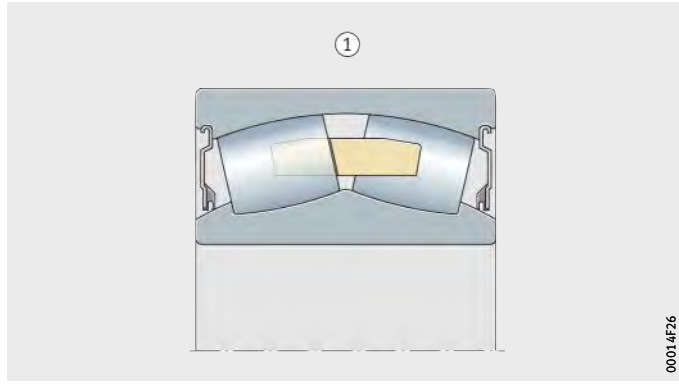

Figure 1
Sealed spherical roller bearing for continuous casting plant

Bearings for work rolls in cold pilger rolling machines

Special bearings for work rolls in cold pilger rolling machines must be able to support high accelerations.
These spherical roller bearings of dimension series 241 have a tapered bore (taper 1:30), *Figure 2*. The reinforced sheet steel cage has a special surface treatment. The radial internal clearance is within the internal clearance group C2 and is marked on the bearing. These special bearings have non-standardised designations (Z-5..-241..-A-K30 or F-8..-241..-A-K30).

Bearings for light section lines

Spherical roller bearings for light section lines or wire mills generally have a loose fit on the roll journal. This is possible if the rolling speed is low and rapid removal from the roll journal is required.
The spherical roller bearings have an inner ring made from case hardening steel. In many cases, there is a helical groove in the bore which is intended to allow better lubrication of the fit surfaces.
These special bearings have the designation Z-5..231, Z-5..232, Z-5..240, Z-5..241, F-8..231 or F-8..240 and have a reduced radial internal clearance to internal clearance group C2, *Figure 3*.

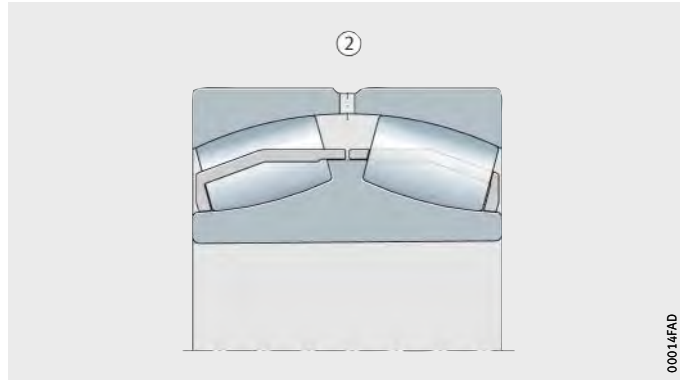

Figure 2
Special spherical roller bearing for work rolls in cold pilger rolling machines

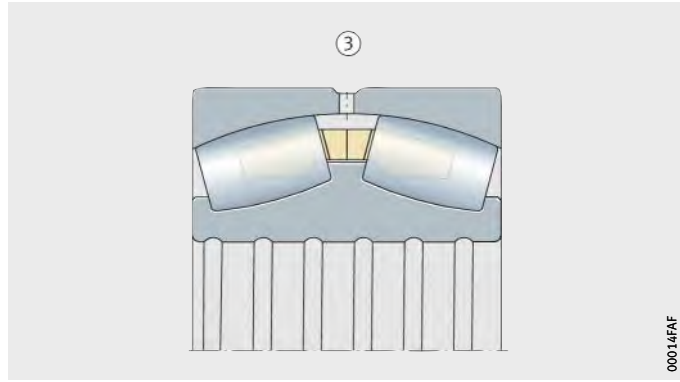

Figure 3
Special spherical roller bearing for light section lines

Bearings for converters

Spherical roller bearings with main dimensions in the standardised series 249 are generally used for the trunnion bearing arrangement in converters. The bearings have a cylindrical or tapered bore (taper 1:30).
Bearings with a cylindrical bore are located directly on the converter trunnion, *Figure 4* ①. Bearings with a tapered bore are located on the trunnion using tapered sleeves, *Figure 4* ②.
For particular heavy loads, bearings with pin cages are used, *Figure 4* ③ and section Cages, page 617.

Special spherical roller bearings for converters have normal tolerances for radial bearings (tolerance class PN).
The radial internal clearance is selected in accordance with the operating temperature and the mounting fits. The special bearings for converters have non-standardised designations (Z-5..249 or Z-5..249..-K30 + Z-5..KH).

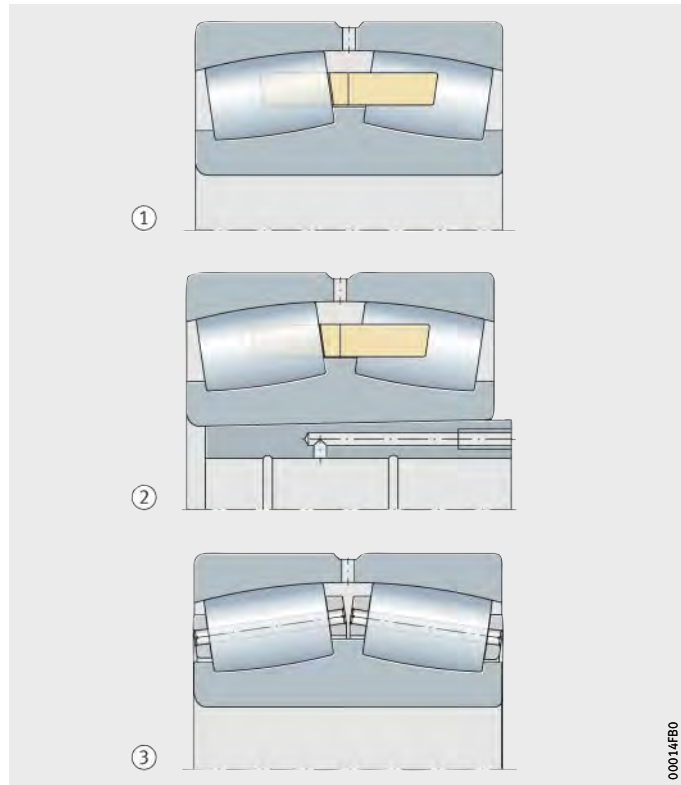

① Bearing for direct seating on journal
② Bearing with tapered bore on sleeve
③ Bearing with pin cage

Figure 4
Special spherical roller bearings for converters

Operating temperature

Spherical roller bearings are dimensionally stable up to +200 °C. Open bearings with metal cages can be used at operating temperatures from –30 °C to +200 °C. Sealed special bearings for continuous casting lines can be used at temperatures up to +180 °C.

Due to the fluoro elastomer seals, sealed spherical roller bearings should not be heated to +300 °C or higher. This may occur, for example, if a welding torch is used in the dismounting of the bearings. If high temperatures are unavoidable, attention must be paid to the valid safety data sheet for the material.

Cages

The cages for standard spherical roller bearings are shown in the tables, page 618 and page 619.

Standard spherical roller bearings with a rigid central rib on the inner ring (design without suffix E1) have solid brass or sheet brass cages, *Figure 5*, page 618 and *Figure 6*, page 619.
The bearings with sheet metal cages do not have a cage suffix.

In bearings with the suffix MB, the solid brass cages are guided on the inner ring, while bearings with the suffix MA have cages guided on the outer ring.

Bearings with the suffix M have a solid brass cage guided by the rollers.

Where special bearings for converters are subjected to particularly heavy loads, they are fitted with pin cages.
These have very high strength and can in particular accommodate numerous through-drilled rollers.

X-life bearings

Bearings of the E1 design without a cage suffix have sheet steel cages. The two cage halves are retained by a guiding ring in the outer or inner ring.

In bearings of the design E1, all the sheet steel cages are protected in particular against wear by surface hardening or coating.

In the other bearings of the E1 design, solid brass cages with the suffix M are used.

Cage and bore code for standard bearings

Series	Sheet metal cage made from		
	Steel		Brass
	Guidance on		
	Outer ring	Inner ring	Inner ring
	Bore code		
222..-E1	36	–	–
223..-E1	30	–	–
223..-E1 (T41A, T41D)	30	–	–
241	–	–	40 – 88
241..-E1	–	38	–

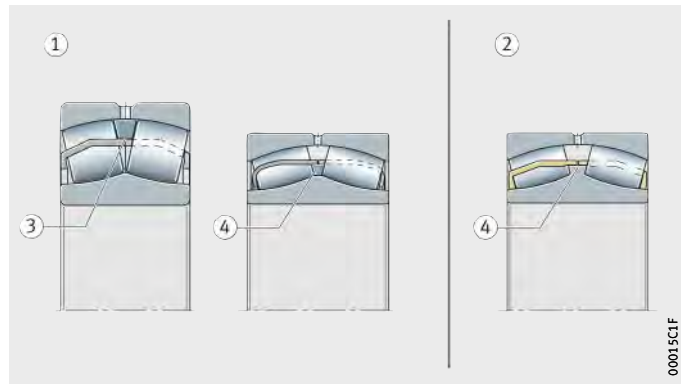

① Sheet steel cages
② Sheet brass cage
③ Cage guidance on outer ring
④ Cage guidance on inner ring

Figure 5
Sheet steel or brass cages

Cage and bore code
(continued)

Series	Solid cage made from Brass		
	Guidance by rollers	Guidance on	
		Inner ring	Outer ring
	M	MB	MA
	Bore code		
222	–	from 38	–
223	–	from 34	–
223..-A (T41A)	–	–	from 32
230	–	44, from 56	–
231	–	44, from 52	–
231..-E1A	38	–	–
232	–	from 38	–
232..-E1A	36	–	–
233..-A (T41A)	–	–	from 30
238	–	from 52	–
239	–	from 48	–
240	–	from 44	–
241	–	from 92	–
248	–	from 52	–
249	–	from 48	–

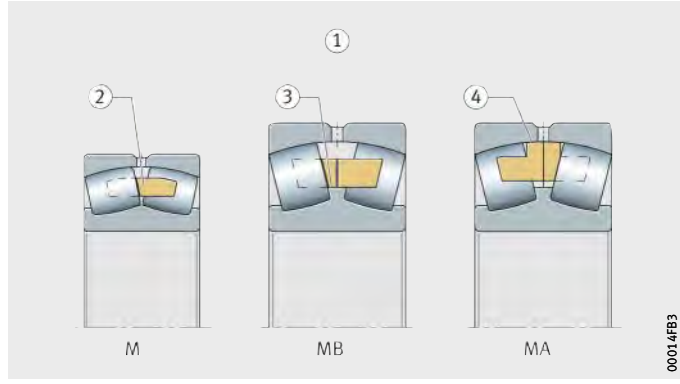

① Solid brass cages
② Cage guided by rollers
③ Cage guidance on inner ring
④ Cage guidance on outer ring

Figure 6
Solid brass cages

Suffixes

Suffixes for available designs: see table.

Available designs

Suffix	Description	Design
A	Modified internal construction	Standard
B	Modified internal construction	
E1	Increased capacity design	
K	Tapered bore, taper 1:12	
K30	Tapered bore, taper 1:30	
M	Solid brass cage, guided by rollers	
MA	Solid brass cage, guided on outer ring	
MB	Solid brass cage, guided on inner ring	
T41A	For oscillating load with restricted diameter tolerances, radial internal clearance C4	
T41D	For oscillating load with restricted diameter tolerances, radial internal clearance C4, bore with thin chromium coating	

Design and safety guidelines

Equivalent dynamic bearing load

The equivalent dynamic load P is valid for bearings that are subjected to radial and axial dynamic loads. It gives the same rating life as the combined bearing load occurring in practice.

For bearings under dynamic loading, the following applies:

Load ratio and equivalent dynamic load

Load ratio	Equivalent dynamic load
$\frac{F_a}{F_r} \leq e$	$P = F_r + Y_1 \cdot F_a$
$\frac{F_a}{F_r} > e$	$P = 0{,}67 \cdot F_r + Y_2 \cdot F_a$

P kN
Equivalent dynamic bearing load for combined load

F_a kN
Axial dynamic bearing load

F_r kN
Radial dynamic bearing load

e, Y_1, Y_2 –
Factors, see dimension tables.

Equivalent static bearing load

The equivalent static load P_0 is valid for bearings that are subjected to radial and axial static loads. It induces the same load at the centre point of the most heavily loaded contact point between the rolling element and raceway as the combined bearing load occurring in practice.

For bearings under static loading, the following applies:

$$P_0 = F_{0r} + Y_0 \cdot F_{0a}$$

P_0 kN
Equivalent static bearing load for combined load

F_{0a} kN
Axial static bearing load

F_{0r} kN
Radial static bearing load

Y_0 –
Factor, see dimension tables.

Static load safety factor for converter bearings

For converter bearings, the requirement is normally:

$$S_0 \geqq 2$$

$$S_0 = \frac{C_{0r}}{P_0}$$

S_0 –
Static load safety factor

C_{0r} kN
Basic static load rating, see dimension tables

P_0 kN
Equivalent static bearing load for combined load.

For locating bearings:

$$P_{0F} = F_{0rF} + Y_0 \cdot (F_{0a} + F_{0a1})$$

For non-locating bearings:

$$P_{0L} = F_{0rL} + Y_0 \cdot F_{0a1}$$

F_{0a} kN
Maximum axial static bearing load

F_{0rF} kN
Maximum radial static bearing load for locating bearings

F_{0rL} kN
Maximum radial static bearing load for non-locating bearings

Y_0 –
Factor, see dimension tables

$F_{0a1} = \mu \cdot F_{0rL}$ kN
Reaction force due to non-locating bearing displacement

$\mu = 0{,}15$ –
Friction factor for bush.

Minimum radial load

The minimum radial load on the spherical roller bearings should be:

- $P = 0{,}02 \cdot C_r$
- $P = 0{,}015 \cdot C_r$ for bearings of E1 design.

Axial load carrying capacity

Spherical roller bearings are suitable for axial loads in both directions. If very high loads occur in combination with very high speeds, the increased friction and bearing temperature must be taken into consideration.

Speeds

The limiting speeds n_G in the dimension tables must not be exceeded.

Design of bearing arrangements

Shaft and housing tolerances

Recommended shaft tolerances for bearings with cylindrical bore, see table, page 130.

Recommended housing tolerances for radial bearings, see table, page 131.

Mounting dimensions

The dimension tables give the maximum dimensions of the radii r_a and the diameters of the abutment shoulders D_a, d_a.

In order to achieve acceptable running of the spherical roller bearings, the abutment shoulders must be no smaller than D_1 and no larger than d_2, see dimension tables.

Bearings with a tapered inner ring bore are:

- located directly on a tapered shaft seat
- located on cylindrical shaft seats by means of adapter sleeves or
- located on cylindrical shaft seats by means of withdrawal sleeves.

If high axial forces are present, a support ring can be used for adapter sleeves. For mounting, attention must be paid to the dimensions of the support ring, see dimension table.



Reduced radial internal clearance in mounting

When bearings with a tapered bore are mounted, there is a reduction in the radial internal clearance.

The values given in the tables will ensure secure seating on the shaft, see following table and table, page 625.

Reduction in radial internal clearance and displacement distance on taper 1:12

Nominal bearing bore diameter d mm		Reduction in radial internal clearance mm		Displacement distance on taper 1:12				Control value for minimum radial internal clearance after mounting		
				Shaft mm		Sleeve mm		CN mm	C3 mm	C4 mm
over	incl.	min.	max.	min.	max.	min.	max.	min.	min.	min.
140	160	0,075	0,1	1,2	1,6	1,3	1,7	0,055	0,09	0,13
160	180	0,08	0,11	1,3	1,7	1,4	1,9	0,06	0,1	0,15
180	200	0,09	0,13	1,4	2	1,5	2,2	0,07	0,1	0,16
200	225	0,1	0,14	1,6	2,2	1,7	2,4	0,08	0,12	0,18
225	250	0,11	0,15	1,7	2,4	1,8	2,6	0,09	0,13	0,2
250	280	0,12	0,17	1,9	2,6	2	2,9	0,1	0,14	0,22
280	315	0,13	0,19	2	3	2,2	3,2	0,11	0,15	0,24
315	355	0,15	0,21	2,4	3,4	2,6	3,6	0,12	0,17	0,26
355	400	0,17	0,23	2,6	3,6	2,9	3,9	0,13	0,19	0,29
400	450	0,2	0,26	3,1	4,1	3,4	4,4	0,13	0,2	0,31
450	500	0,21	0,28	3,3	4,4	3,6	4,8	0,16	0,23	0,35
500	560	0,24	0,32	3,7	5	4,1	5,4	0,17	0,25	0,36
560	630	0,26	0,35	4	5,4	4,4	5,9	0,2	0,29	0,41
630	710	0,3	0,4	4,6	6,2	5,1	6,8	0,21	0,31	0,45
710	800	0,34	0,45	5,3	7	5,8	7,6	0,23	0,35	0,51
800	900	0,37	0,5	5,7	7,8	6,3	8,5	0,27	0,39	0,57
900	1000	0,41	0,55	6,3	8,5	7	9,4	0,3	0,43	0,64
1000	1120	0,45	0,6	6,8	9	7,6	10,2	0,32	0,48	0,7
1120	1250	0,49	0,65	7,4	9,8	8,3	11	0,34	0,54	0,77
1250	1400	0,55	0,72	8,3	10,8	9,3	12,1	0,36	0,59	0,84
1400	1600	0,62	0,81	9,3	12,2	10,6	13,8	0,44	0,66	0,94
1600	1800	0,69	0,93	10,4	14	11,7	15,8	0,48	0,73	1,02
1800	2000	0,77	1,04	11,6	15,6	13,1	17,7	0,54	0,81	1,11
2000	2250	0,85	1,15	12,7	17,2	14,5	19,5	0,6	0,95	1,55
2250	2500	0,95	1,28	14,3	19,2	16,2	21,8	0,65	1,15	1,7

Reduction in radial internal clearance and displacement distance on taper 1:30

Nominal bearing bore diameter d mm		Reduction in radial internal clearance mm		Displacement distance on taper 1:30				Control value for minimum radial internal clearance after mounting		
				Shaft mm		Sleeve mm		CN mm	C3 mm	C4 mm
over	incl.	min.	max.	min.	max.	min.	max.	min.	min.	min.
160	180	0,08	0,11	3,2	4,2	3,3	4,6	0,06	0,1	0,15
180	200	0,09	0,13	3,5	4,5	3,6	5	0,07	0,1	0,16
200	225	0,1	0,14	4	5,5	4,2	5,7	0,08	0,12	0,18
225	250	0,11	0,15	4,2	6	4,6	6,2	0,09	0,13	0,2
250	280	0,12	0,17	4,7	6,7	4,8	6,9	0,1	0,14	0,22
280	315	0,13	0,19	5	7,5	5,2	7,7	0,11	0,15	0,24
315	355	0,15	0,21	6	8,2	6,2	8,4	0,12	0,17	0,26
355	400	0,17	0,23	6,5	9	6,8	9,2	0,13	0,19	0,29
400	450	0,2	0,26	7,7	10	8	10,4	0,13	0,2	0,31
450	500	0,21	0,28	8,2	11	8,4	11,2	0,16	0,23	0,35
500	560	0,24	0,32	9,2	12,5	9,6	12,8	0,17	0,25	0,36
560	630	0,26	0,35	10	13,5	10,4	14	0,2	0,29	0,41
630	710	0,3	0,4	11,5	15,5	12	16	0,21	0,31	0,45
710	800	0,34	0,45	13,3	17,5	13,6	18	0,23	0,35	0,51
800	900	0,37	0,5	14,3	19,5	14,8	20	0,27	0,39	0,57
900	1000	0,41	0,55	15,8	21	16,4	22	0,3	0,43	0,64
1000	1120	0,45	0,6	17	23	18	24	0,32	0,48	0,7
1120	1250	0,49	0,65	18,5	25	19,6	26	0,34	0,54	0,77
1250	1400	0,55	0,72	21	27	22,2	28,3	0,36	0,59	0,84
1400	1600	0,62	0,81	23,6	30,8	24,8	32,4	0,44	0,66	0,94
1600	1800	0,69	0,93	26,2	35,3	27,6	37,2	0,48	0,73	1,02
1800	2000	0,77	1,04	29,3	39,5	30,8	41,6	0,54	0,81	1,11
2000	2250	0,85	1,15	32,4	43,9	34	46	0,6	0,95	1,55
2250	2500	0,95	1,28	36,2	48,8	38	51,2	0,65	1,15	1,7

Accuracy

The main dimensions of the standard bearings conform to DIN 635-2. The dimensional and geometrical tolerances of the bearings correspond to tolerance class PN to DIN 620-2.

Tolerances for bearings to specification T41A and T41D

Restricted tolerance accordng to specification T41A (D), see following table. In bearings with a tapered bore, the reduced tolerance range applies to the outside diameter only.

Tolerances

Inner ring			Outer ring		
Nominal bearing bore diameter mm		Deviation Δ_{dmp} µm	Nominal outside diameter mm		Deviation Δ_{Dmp} µm
over	incl.		over	incl.	
120	180	0 −15	315	400	−13 −28
180	250	0 −18	400	500	−13 −30
250	315	0 −21	500	630	−15 −35

Radial internal clearance of bearings with cylindrical bore

The radial internal clearance of standard bearings corresponds to internal clearance group CN to DIN 620-4.

Radial internal clearance

Bore d mm		Radial internal clearance							
		C2 µm		CN µm		C3 µm		C4 µm	
over	incl.	min.	max.	min.	max.	min.	max.	min.	max.
140	160	60	110	110	170	170	220	220	280
160	180	65	120	120	180	180	240	240	310
180	200	70	130	130	200	200	260	260	340
200	225	80	140	140	220	220	290	290	380
225	250	90	150	150	240	240	320	320	420
250	280	100	170	170	260	260	350	350	460
280	315	110	190	190	280	280	370	370	500
315	355	120	200	200	310	310	410	410	550
355	400	130	220	220	340	340	450	450	600
400	450	140	240	240	370	370	500	500	660
450	500	140	260	260	410	410	550	550	720
500	560	150	280	280	440	440	600	600	780
560	630	170	310	310	480	480	650	650	850
630	710	190	350	350	530	530	700	700	920
710	800	210	390	390	580	580	770	770	1010
800	900	230	430	430	650	650	860	860	1120
900	1000	260	480	480	710	710	930	930	1220
1000	1120	290	530	530	770	770	1050	1050	1430
1120	1250	320	580	580	840	840	1140	1140	1560
1250	1400	350	630	630	910	910	1240	1240	1700
1400	1600	380	700	700	1020	1020	1390	1390	1890
1600	1800	420	780	780	1140	1140	1550	1550	2090
1800	2000	460	860	860	1260	1260	1710	1710	2300
2000	2250	500	950	950	1400	1400	1900	1900	2540
2250	2500	550	1050	1050	1550	1550	2100	2100	2790

Radial internal clearance of bearings with tapered bore

Radial internal clearance

The radial internal clearance of standard bearings corresponds to internal clearance group CN to DIN 620-4.

Bore d mm		Radial internal clearance							
		C2 µm		CN µm		C3 µm		C4 µm	
over	incl.	min.	max.	min.	max.	min.	max.	min.	max.
140	160	90	130	130	180	180	230	230	300
160	180	100	140	140	200	200	260	260	340
180	200	110	160	160	220	220	290	290	370
200	225	120	180	180	250	250	320	320	410
225	250	140	200	200	270	270	350	350	450
250	280	150	220	220	300	300	390	390	490
280	315	170	240	240	330	330	430	430	540
315	355	190	270	270	360	360	470	470	590
355	400	210	300	300	400	400	520	520	650
400	450	230	330	330	440	440	570	570	720
450	500	260	370	370	490	490	630	630	790
500	560	290	410	410	540	540	680	680	870
560	630	320	460	460	600	600	760	760	980
630	710	350	510	510	670	670	850	850	1 090
710	800	390	570	570	750	750	960	960	1 220
800	900	440	640	640	840	840	1 070	1 070	1 370
900	1000	490	710	710	930	930	1190	1190	1520
1000	1120	540	780	780	1020	1020	1300	1300	1650
1120	1250	600	860	860	1120	1120	1420	1420	1800
1250	1400	660	940	940	1220	1220	1550	1550	1960
1400	1600	740	1060	1060	1380	1380	1750	1750	2 200
1600	1800	820	1180	1180	1540	1540	1950	1950	2 500
1800	2 000	910	1310	1310	1710	1710	2150	2150	2750
2 000	2 250	1000	1450	1450	1900	1900	2 400	2 400	3 050
2 250	2 500	1100	1600	1600	2100	2100	2 650	2 650	3 350

Spherical roller bearings

Cylindrical or tapered bore

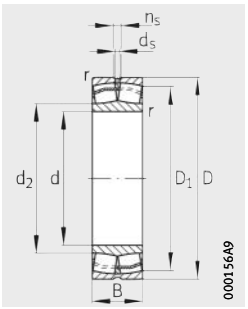

Design 1
Cylindrical bore

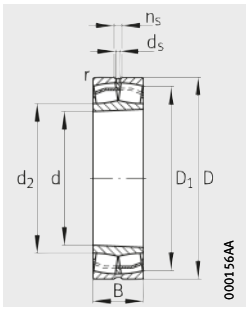

Tapered bore
K = taper 1:12
K30 = taper 1:30

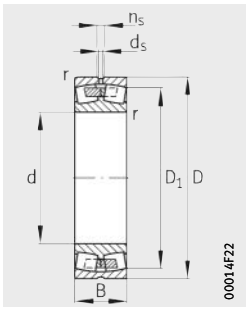

Design 2
With central rib
Cylindrical bore

Dimension table · Dimensions in mm

Designation		Design	Mass	Dimensions							
	X-life		m ≈kg	d	D	B	r min.	D_1 ≈	d_2 ≈	d_s	n_s
22330-E1-K	**XL**	1	40,9	**150**	320	108	4	273,2	185,3	9,5	17,7
22330-E1-K-T41A	**XL**	1	40,9	**150**	320	108	4	273,2	185,3	9,5	17,7
22330-E1	**XL**	1	42,2	**150**	320	108	4	273,2	185,3	9,5	17,7
22330-E1-T41D	**XL**	1	42,2	**150**	320	108	4	273,2	185,3	9,5	17,7
23330-A-MA-T41A	–	2	49,8	**150**	320	128	4	264,5	–	8	15
22332-K-MB	–	2	50,1	**160**	340	114	4	288,3	–	9,5	17,7
22332-MB	–	2	51,1	**160**	340	114	4	288,3	–	9,5	17,7
22332-A-MA-T41A	–	2	52,4	**160**	340	114	4	288,3	–	9,5	17,7
23332-A-MA-T41A	–	2	61,3	**160**	340	136	4	280,6	–	9,5	17,7
22334-K-MB	–	2	58,4	**170**	360	120	4	304,2	–	9,5	17,7
22334-A-MA-T41A	–	2	59,5	**170**	360	120	4	304,2	–	9,5	17,7
22334-MB	–	2	59,5	**170**	360	120	4	304,2	–	9,5	17,7
23334-A-MA-T41A	–	2	71,9	**170**	360	140	4	300,7	–	9,5	17,7
22236-E1-K	**XL**	1	28,5	**180**	320	86	4	285,9	211,3	9,5	17,7
22236-E1	**XL**	1	29,2	**180**	320	86	4	285,9	211,3	9,5	17,7
23236-E1A-K-M	**XL**	1	37	**180**	320	112	4	277,3	–	8	15
23236-E1A-M	**XL**	1	38,5	**180**	320	112	4	277,3	–	8	15
22336-K-MB	–	2	66,7	**180**	380	126	4	323,4	–	12,5	23,5
22336-MB	–	2	69	**180**	380	126	4	323,4	–	12,5	23,5
22336-A-MA-T41A	–	2	71,7	**180**	380	126	4	323,4	–	12,5	23,5
23336-A-MA-T41A	–	2	86,4	**180**	380	150	4	315,9	–	9,5	17,7
23138-E1A-K-M	**XL**	1	32,4	**190**	320	104	3	281,6	–	8	15
23138-E1A-M	**XL**	1	33,9	**190**	320	104	3	281,6	–	8	15
24138-E1	**XL**	1[1)]	41,5	**190**	320	128	3	271,2	217,4	6,3	12,2
24138-E1-K30	**XL**	1[1)]	41,5	**190**	320	128	3	271,2	217,4	6,3	12,2
22238-K-MB	–	2	36,2	**190**	340	92	4	296	–	9,5	17,7
22238-MB	–	2	37	**190**	340	92	4	296	–	9,5	17,7
23238-B-K-MB	–	2	46	**190**	340	120	4	291,2	–	9,5	17,7
23238-B-MB	–	2	48,4	**190**	340	120	4	291,2	–	9,5	17,7
22338-K-MB	–	2	77,3	**190**	400	132	5	338,2	–	12,5	23,5
22338-A-MA-T41A	–	2	80,5	**190**	400	132	5	338,2	–	12,5	23,5
22338-MB	–	2	80,5	**190**	400	132	5	338,2	–	12,5	23,5
23338-A-MA-T41A	–	2	97,1	**190**	400	155	5	331,6	–	9,5	17,7

1) Cage guidance on inner ring central rib.

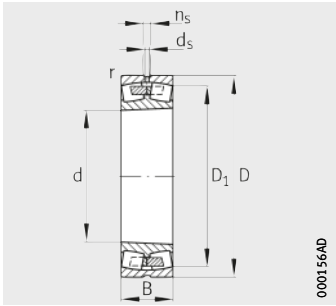

With central rib
K = taper 1:12
K30 = taper 1:30

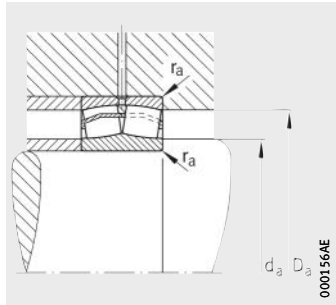

Design 1
Mounting dimensions

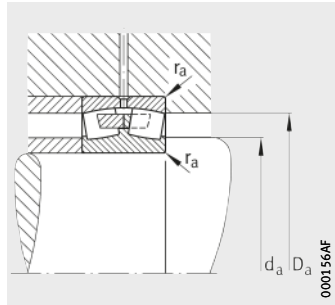

Design 2
Mounting dimensions

Mounting dimensions			Basic load ratings		Calculation factors				Fatigue limit load	Limiting speed	Reference speed
d_a	D_a	r_a	dyn. C_r	stat. C_{0r}	e	Y_1	Y_2	Y_0	C_{ur}	n_G	n_B
min.	max.	max.	kN	kN					kN	min^{-1}	min^{-1}
167	303	3	1 640	1 850	0,33	2,02	3	1,97	148	2 200	1 520
167	303	3	1 640	1 850	0,33	2,02	3	1,97	148	2 200	1 520
167	303	3	1 640	1 850	0,33	2,02	3	1,97	148	2 200	1 520
167	303	3	1 640	1 850	0,33	2,02	3	1,97	148	2 200	1 520
167	303	3	1 500	2 120	0,44	1,52	2,26	1,49	135	2 000	–
177	323	3	1 430	1 900	0,37	1,8	2,69	1,76	121	2 000	1 500
177	323	3	1 430	1 900	0,37	1,8	2,69	1,76	121	2 000	1 500
177	323	3	1 430	1 900	0,37	1,8	2,69	1,76	136	2 000	1 500
177	323	3	1 660	2 320	0,44	1,54	2,3	1,51	152	2 000	–
187	343	3	1 600	2 120	0,37	1,83	2,72	1,79	134	1 800	1 380
187	343	3	1 600	2 120	0,37	1,83	2,72	1,79	144	1 800	1 380
187	343	3	1 600	2 120	0,37	1,83	2,72	1,79	134	1 800	1 380
187	343	3	1 800	2 600	0,43	1,57	2,34	1,53	160	1 700	–
197	303	3	1 360	1 680	0,25	2,71	4,04	2,65	148	2 400	1 670
197	303	3	1 360	1 680	0,25	2,71	4,04	2,65	148	2 400	1 670
197	303	3	1 710	2 340	0,33	2,07	3,09	2,03	173	2 000	1 090
197	303	3	1 710	2 340	0,33	2,07	3,09	2,03	173	2 000	1 090
197	363	3	1 760	2 360	0,37	1,83	2,72	1,79	209	1 500	1 270
197	363	3	1 760	2 360	0,37	1,83	2,72	1,79	209	1 500	1 270
197	363	3	1 760	2 360	0,37	1,83	2,72	1,79	234	1 500	1 270
197	363	3	2 040	2 900	0,44	1,54	2,29	1,5	260	1 500	–
204	306	2,5	1 610	2 220	0,3	2,28	3,39	2,23	218	2 000	1 260
204	306	2,5	1 610	2 220	0,3	2,28	3,39	2,23	218	2 000	1 260
204	306	2,5	1 670	2 500	0,37	1,82	2,7	1,78	226	1 400	880
204	306	2,5	1 670	2 500	0,37	1,82	2,7	1,78	226	1 400	880
207	323	3	1 200	1 830	0,28	2,39	3,56	2,34	122	1 800	1 600
207	323	3	1 200	1 830	0,28	2,39	3,56	2,34	122	1 800	1 600
207	323	3	1 560	2 600	0,36	1,86	2,77	1,82	156	1 700	1 020
207	323	3	1 560	2 600	0,36	1,86	2,77	1,82	156	1 700	1 020
210	380	4	1 860	2 500	0,37	1,83	2,72	1,79	213	1 500	1 220
210	380	4	1 860	2 500	0,37	1,83	2,72	1,79	173	1 500	1 220
210	380	4	1 860	2 500	0,37	1,83	2,72	1,79	213	1 500	1 220
210	380	4	2 200	3 200	0,43	1,57	2,34	1,53	223	1 400	–

Spherical roller bearings

Cylindrical or tapered bore
Open or sealed

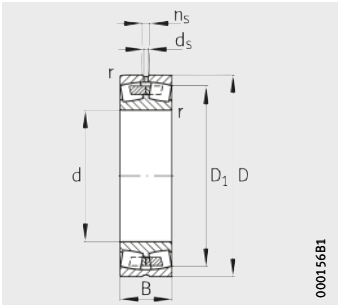

Design 2
With central rib
Cylindrical bore

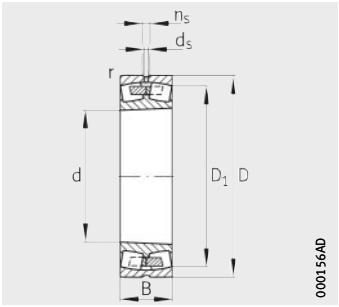

With central rib
K = taper 1:12
K30 = taper 1:30

Dimension table (continued) · Dimensions in mm

Designation	Design	Mass	Dimensions						
		m	d	D	B	r	D_1	d_s	n_s
		≈kg				min.	≈		
F-803046.PRL	4	20	**200**	340	112	3	293,3	–	–
23140-B-K-MB	2	41,7	**200**	340	112	3	293,3	9,5	17,7
23140-B-MB	2	43	**200**	340	112	4	293,3	9,5	17,7
F-803040.PRL	4	52,5	**200**	340	140	3	285,9	–	–
F-803047.PRL	4	52,5	**200**	340	140	3	285,9	–	–
24140-B-K30	2	51,6	**200**	340	140	3	285,9	6,3	12,2
24140-B	2	52,4	**200**	340	140	3	285,9	6,3	12,2
22240-B-K-MB	2	42,3	**200**	360	98	4	312	9,5	17,7
22240-B-MB	2	44,2	**200**	360	98	4	312	9,5	17,7
23240-B-K-MB	2	55,8	**200**	360	128	4	307,5	9,5	17,7
23240-B-MB	2	60,5	**200**	360	128	4	307,5	9,5	17,7
22340-K-MB	2	89,5	**200**	420	138	5	357,4	12,5	23,5
22340-MB	2	91	**200**	420	138	5	357,4	12,5	23,5
22340-A-MA-T41A	2	92,4	**200**	420	138	5	357,4	12,5	23,5
23340-A-MA-T41A	2	108	**200**	420	165	5	350,2	9,5	17,7
23044-K-MB	2	30,3	**220**	340	90	3	301,8	8	15
23044-MB	2	31,7	**220**	340	90	3	301,8	8	15
24044-B-K30-MB	2	38,9	**220**	340	118	3	297,4	6,3	12,2
24044-B-MB	2	39,5	**220**	340	118	3	297,4	6,3	12,2
23144-B-K-MB	2	52	**220**	370	120	4	319,2	9,5	17,7
23144-B-MB	2	55,2	**220**	370	120	4	319,2	9,5	17,7
24144-B-K30	2	64,4	**220**	370	150	4	311,7	6,3	12,2
24144-B	2	65,6	**220**	370	150	4	311,7	6,3	12,2
22244-B-K-MB	2	59,6	**220**	400	108	4	348,7	9,5	17,7
22244-B-MB	2	61,5	**220**	400	108	4	348,7	9,5	17,7
23244-K-MB	2	79	**220**	400	144	4	337,6	9,5	17,7
23244-MB	2	81,1	**220**	400	144	4	337,6	9,5	17,7
F-803054.PRL	4	79,9	**220**	400	144	4	341	–	–
22344-K-MB	2	114	**220**	460	145	5	391,2	12,5	23,5
22344-A-MA-T41A	2	119	**220**	460	145	5	391,2	12,5	23,5
22344-MB	2	119	**220**	460	145	5	391,2	12,5	23,5
23344-A-MA-T41A	2	151	**220**	460	180	5	382,8	9,5	17,7
23948-K-MB	2	13,4	**240**	320	60	2,1	297,8	6,3	12,2
23948-MB	2	13,9	**240**	320	60	2,1	297,8	6,3	12,2
24948-B-K30-MB	2	18,6	**240**	320	80	2,1	294,3	4,8	9,5
24948-B-MB	2	18,6	**240**	320	80	2,1	294,3	4,8	9,5

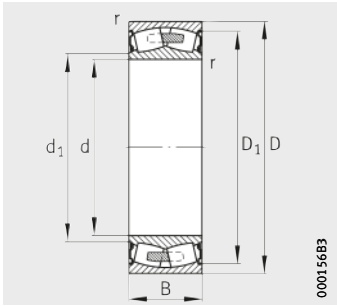

Design 4
Cylindrical bore
Sealed

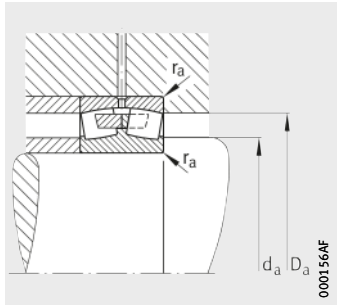

Design 2
Mounting dimensions

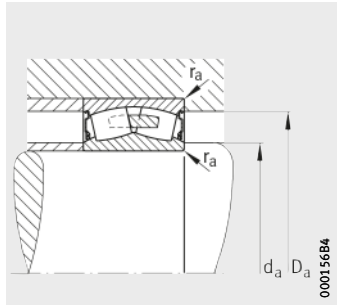

Design 4
Mounting dimensions

Mounting dimensions			Basic load ratings		Calculation factors				Fatigue limit load	Limiting speed	Reference speed
d_a	D_a	r_a	dyn. C_r	stat. C_{0r}	e	Y_1	Y_2	Y_0	C_{ur}	n_G	n_B
min.	max.	max.	kN	kN					kN	min^{-1}	min^{-1}
214	326	2,5	1 290	2 200	0,28	2,43	3,61	2,37	138	420	–
214	326	2,5	1 320	2 280	0,35	1,95	2,9	1,91	131	1 700	1 230
214	326	2,5	1 320	2 280	0,35	1,95	2,9	1,91	131	1 700	1 230
214	326	2,5	1 530	2 700	0,33	2,03	3,02	1,98	178	280	–
214	326	2,5	1 530	2 700	0,33	2,03	3,02	1,98	178	280	–
214	326	2,5	1 700	3 000	0,42	1,62	2,42	1,59	190	1 400	810
214	326	2,5	1 700	3 000	0,42	1,62	2,42	1,59	190	1 400	810
217	343	3	1 320	2 000	0,29	2,35	3,5	2,3	123	1 700	1 530
217	343	3	1 320	2 000	0,29	2,35	3,5	2,3	123	1 700	1 530
217	343	3	1 660	2 750	0,37	1,83	2,72	1,79	163	1 500	980
217	343	3	1 660	2 750	0,37	1,83	2,72	1,79	163	1 500	980
220	400	4	2 080	2 800	0,36	1,87	2,79	1,83	189	1 400	1 120
220	400	4	2 080	2 800	0,36	1,87	2,79	1,83	189	1 400	1 120
220	400	4	2 080	2 800	0,36	1,87	2,79	1,83	189	1 400	1 120
220	400	4	2 450	3 600	0,43	1,55	2,31	1,52	238	1 300	–
232,4	327,6	2,5	1 100	2 000	0,26	2,55	3,8	2,5	132	1 700	1 440
232,4	327,6	2,5	1 100	2 000	0,26	2,55	3,8	2,5	132	1 700	1 440
232,4	327,6	2,5	1 400	2 700	0,34	1,96	2,92	1,92	139	1 300	1 070
232,4	327,6	2,5	1 400	2 700	0,34	1,96	2,92	1,92	139	1 300	1 070
237	353	3	1 630	2 900	0,33	2,03	3,02	1,98	165	1 400	1 060
237	353	3	1 630	2 900	0,33	2,03	3,02	1,98	165	1 400	1 060
237	353	3	1 900	3 450	0,41	1,63	2,43	1,6	197	1 300	720
237	353	3	1 900	3 450	0,41	1,63	2,43	1,6	197	1 300	720
237	383	3	1 630	2 450	0,29	2,35	3,5	2,3	153	1 400	1 300
237	383	3	1 630	2 450	0,29	2,35	3,5	2,3	153	1 400	1 300
237	383	3	2 040	3 450	0,37	1,83	2,72	1,79	181	1 400	850
237	383	3	2 040	3 450	0,37	1,83	2,72	1,79	181	1 400	850
237	383	3	2 080	3 450	0,33	2,06	3,06	2,01	182	350	–
240	440	4	2 320	3 350	0,35	1,95	2,9	1,91	217	1 300	970
240	440	4	2 320	3 350	0,35	1,95	2,9	1,91	217	1 300	970
240	440	4	2 320	3 350	0,35	1,95	2,9	1,91	217	1 300	970
240	440	4	2 850	4 250	0,43	1,56	2,32	1,53	240	1 300	–
250,2	309,8	2,1	640	1 370	0,17	4,05	6,04	3,96	93	1 500	1 310
250,2	309,8	2,1	640	1 370	0,17	4,05	6,04	3,96	93	1 500	1 310
250,2	309,8	2,1	780	1 700	0,23	2,92	4,35	2,86	162	1 300	–
250,2	309,8	2,1	780	1 700	0,23	2,92	4,35	2,86	162	1 300	–

Spherical roller bearings

Cylindrical or tapered bore
Open or sealed

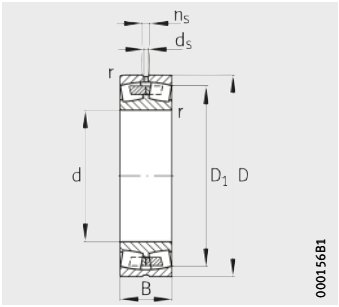

Design 2
With central rib
Cylindrical bore

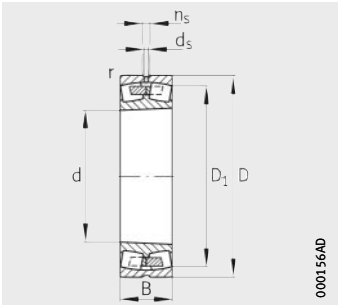

With central rib
K = taper 1:12
K30 = taper 1:30

Dimension table (continued) · Dimensions in mm

Designation	Design	Mass	Dimensions						
		m	d	D	B	r	D_1	d_s	n_s
		≈kg				min.	≈		
23048-K-MB	2	31,9	**240**	360	92	3	322,1	8	15
23048-MB	2	34,4	**240**	360	92	3	322,1	8	15
F-803070.PRL	4	42	**240**	360	118	3	318,9	–	–
24048-B-K30-MB	2	43,2	**240**	360	118	3	318,9	6,3	12,2
24048-B-MB	2	43,6	**240**	360	118	3	318,9	6,3	12,2
23148-B-K-MB	2	65,3	**240**	400	128	4	346,2	9,5	17,7
23148-B-MB	2	67,3	**240**	400	128	4	346,2	9,5	17,7
24148-B-K30	2	78,7	**240**	400	160	4	338	6,3	12,2
24148-B	2	80,7	**240**	400	160	4	338	6,3	12,2
22248-B-K-MB	2	81,2	**240**	440	120	4	380,7	12,5	23,5
22248-B-MB	2	83,4	**240**	440	120	4	380,7	12,5	23,5
23248-B-K-MB	2	105	**240**	440	160	4	371	12,5	23,5
23248-B-MB	2	110	**240**	440	160	4	371	12,5	23,5
22348-K-MB	2	145	**240**	500	155	5	420	12,5	23,5
22348-MB	2	151	**240**	500	155	5	420	12,5	23,5
23348-A-MA-T41A	2	187	**240**	500	195	5	416,7	12,5	23,5
23852-B-K-MB	2	8,28	**260**	320	45	2	303,2	3,2	6,5
23852-B-MB	2	8,28	**260**	320	45	2	303,2	3,2	6,5
24852-B-K30-MB	2	11,4	**260**	320	60	2	301,8	3,2	6,5
24852-B-MB	2	11,4	**260**	320	60	2	301,8	3,2	6,5
23952-K-MB	2	22,4	**260**	360	75	2,1	330,5	8	15
23952-MB	2	24,1	**260**	360	75	2,1	330,5	8	15
24952-B-K30-MB	2	31,7	**260**	360	100	2,1	328,1	4,8	9,5
24952-B-MB	2	31,7	**260**	360	100	2,1	328,1	4,8	9,5
23052-K-MB	2	46,2	**260**	400	104	4	357,2	9,5	17,7
23052-MB	2	49,3	**260**	400	104	4	357,2	9,5	17,7
24052-B-K30-MB	2	64,5	**260**	400	140	4	349,1	6,3	12,2
24052-B-MB	2	67,2	**260**	400	140	4	349,1	6,3	12,2
23152-K-MB	2	89,6	**260**	440	144	4	379,7	9,5	17,7
23152-MB	2	92,5	**260**	440	144	4	379,7	9,5	17,7
24152-B-K30	2	112	**260**	440	180	4	370,3	8	15
24152-B	2	114	**260**	440	180	4	370,3	8	15
F-803064.PRL	4	113	**260**	440	180	4	368,4	–	–

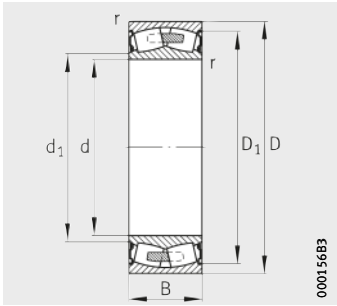

Design 4
Cylindrical bore
Sealed

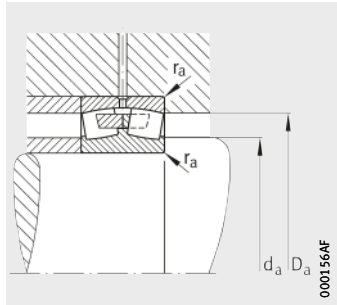

Design 2
Mounting dimensions

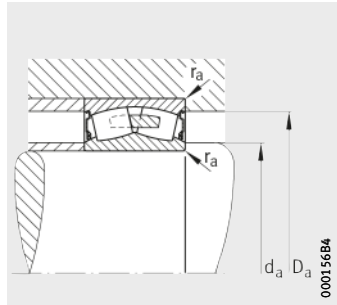

Design 4
Mounting dimensions

Mounting dimensions			Basic load ratings		Calculation factors				Fatigue limit load	Limiting speed	Reference speed
d_a	D_a	r_a	dyn. C_r	stat. C_{0r}	e	Y_1	Y_2	Y_0	C_{ur}	n_G	n_B
min.	max.	max.	kN	kN					kN	min^{-1}	min^{-1}
252,4	347,6	2,5	1 160	2 200	0,25	2,74	4,08	2,68	130	1 400	1 310
252,4	347,6	2,5	1 160	2 200	0,25	2,74	4,08	2,68	130	1 400	1 310
252,4	347,6	2,5	1 460	2 850	0,27	2,49	3,71	2,43	150	315	–
252,4	347,6	2,5	1 500	2 900	0,32	2,1	3,13	2,06	150	1 300	970
252,4	347,6	2,5	1 500	2 900	0,32	2,1	3,13	2,06	150	1 300	970
257	383	3	1 860	3 250	0,33	2,06	3,06	2,01	177	1 300	970
257	383	3	1 860	3 250	0,33	2,06	3,06	2,01	177	1 300	970
257	383	3	2 120	3 900	0,41	1,66	2,47	1,62	231	1 200	660
257	383	3	2 120	3 900	0,41	1,66	2,47	1,62	231	1 200	660
257	423	3	1 960	3 050	0,29	2,35	3,5	2,3	184	1 300	1 180
257	423	3	1 960	3 050	0,29	2,35	3,5	2,3	184	1 300	1 180
257	423	3	2 450	4 250	0,37	1,8	2,69	1,76	231	1 300	750
257	423	3	2 450	4 250	0,37	1,8	2,69	1,76	231	1 300	750
260	480	4	2 650	3 900	0,35	1,95	2,9	1,91	249	1 500	870
260	480	4	2 650	3 900	0,35	1,95	2,9	1,91	249	1 500	870
260	480	4	3 350	5 200	0,43	1,58	2,35	1,54	270	1 100	–
268,8	311,2	2	415	1 000	0,12	5,72	8,51	5,59	67	1 540	–
268,8	311,2	2	415	1 000	0,12	5,72	8,51	5,59	67	1 540	–
268,8	311,2	2	570	1 400	0,17	3,95	5,88	3,86	–	1 300	–
268,8	311,2	2	570	1 400	0,17	3,95	5,88	3,86	–	1 300	–
270,2	349,8	2,1	930	1 930	0,19	3,54	5,27	3,46	108	1 400	1 190
270,2	349,8	2,1	930	1 930	0,19	3,54	5,27	3,46	108	1 400	1 190
270,2	349,8	2,1	1 120	2 400	0,26	2,57	3,83	2,52	218	1 200	–
270,2	349,8	2,1	1 120	2 400	0,26	2,57	3,83	2,52	218	1 200	–
274,6	385,4	3	1 500	2 800	0,26	2,64	3,93	2,58	155	1 300	1 160
274,6	385,4	3	1 500	2 800	0,26	2,64	3,93	2,58	155	1 300	1 160
274,6	385,4	3	1 900	3 800	0,35	1,94	2,88	1,89	204	1 100	870
274,6	385,4	3	1 900	3 800	0,35	1,94	2,88	1,89	204	1 100	870
277	423	3	2 200	4 000	0,33	2,03	3,02	1,98	213	1 200	850
277	423	3	2 200	4 000	0,33	2,03	3,02	1,98	213	1 200	850
277	423	3	2 700	5 100	0,42	1,61	2,4	1,58	315	1 100	550
277	423	3	2 700	5 100	0,42	1,61	2,4	1,58	315	1 100	550
277	423	3	2 700	5 100	0,42	1,61	2,4	1,58	340	260	–

Spherical roller bearings

Cylindrical or tapered bore
Open or sealed

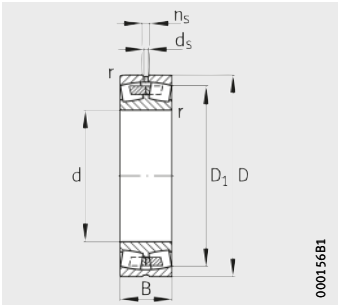

Design 2
With central rib
Cylindrical bore

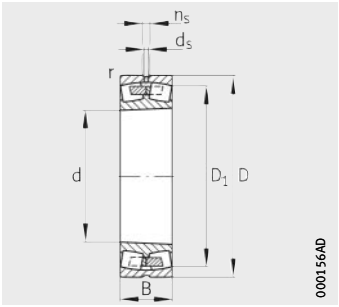

With central rib
K = taper 1:12
K30 = taper 1:30

Dimension table (continued) · Dimensions in mm

Designation	Design	Mass	Dimensions						
		m	d	D	B	r	D_1	d_s	n_s
		≈kg				min.	≈		
22252-B-K-MB	2	106	**260**	480	130	5	415,3	12,5	23,5
22252-B-MB	2	110	**260**	480	130	5	415,3	12,5	23,5
23252-B-K-MB	2	138	**260**	480	174	5	405,4	12,5	23,5
23252-B-MB	2	144	**260**	480	174	5	405,4	12,5	23,5
22352-K-MB	2	177	**260**	540	165	6	452,1	12,5	23,5
22352-MB	2	185	**260**	540	165	6	452,1	12,5	23,5
23856-MB	2	11,9	**280**	350	52	2	330,7	4,8	9,5
23856-K-MB	2	11,9	**280**	350	52	2	330,7	4,8	9,5
24856-B-K30-MB	2	15,2	**280**	350	69	2	328,6	4,8	9,5
24856-B-MB	2	15,2	**280**	350	69	2	328,6	4,8	9,5
23956-K-MB	2	24,7	**280**	380	75	2,1	350	8	15
23956-MB	2	25,5	**280**	380	75	2,1	350	8	15
24956-K30-MB	2	33,1	**280**	380	100	2,1	349	4,8	9,5
24956-MB	2	33,1	**280**	380	100	2,1	349	4,8	9,5
23056-B-K-MB	2	50,3	**280**	420	106	4	376,5	9,5	17,7
23056-B-MB	2	52,9	**280**	420	106	4	376,5	9,5	17,7
F-803071.PRL	4	38,9	**280**	420	140	4	369,5	–	–
24056-B-K30-MB	2	69,7	**280**	420	140	4	369,5	6,3	12,2
24056-B-MB	2	70,8	**280**	420	140	4	369,5	6,3	12,2
23156-B-K-MB	2	96,4	**280**	460	146	5	401,4	9,5	17,7
23156-B-MB	2	99,5	**280**	460	146	5	401,4	9,5	17,7
24156-B-K30	2	118	**280**	460	180	5	392,8	8	15
24156-B	2	119	**280**	460	180	5	392,8	8	15
22256-B-K-MB	2	110	**280**	500	130	5	435,2	12,5	23,5
22256-B-MB	2	113	**280**	500	130	5	435,2	12,5	23,5
23256-K-MB	2	153	**280**	500	176	5	426,3	12,5	23,5
23256-MB	2	157	**280**	500	176	5	426,3	12,5	23,5
22356-K-MB	2	224	**280**	580	175	6	489,3	12,5	23,5
22356-MB	2	233	**280**	580	175	6	489,3	12,5	23,5
23860-MB	2	16,3	**300**	380	60	2,1	357,8	4,8	9,5
23860-K-MB	2	16,3	**300**	380	60	2,1	357,8	4,8	9,5
24860-B-K30-MB	2	21,3	**300**	380	80	2,1	355	4,8	9,5
24860-B-MB	2	21,3	**300**	380	80	2,1	355	4,8	9,5

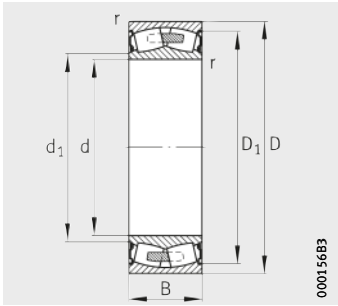

Design 4
Cylindrical bore
Sealed

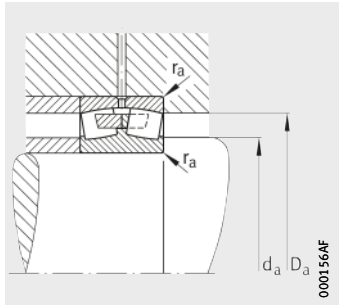

Design 2
Mounting dimensions

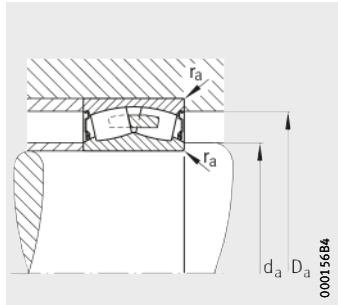

Design 4
Mounting dimensions

Mounting dimensions			Basic load ratings		Calculation factors				Fatigue limit load	Limiting speed	Reference speed
d_a	D_a	r_a	dyn. C_r	stat. C_{0r}	e	Y_1	Y_2	Y_0	C_{ur}	n_G	n_B
min.	max.	max.	kN	kN					kN	min^{-1}	min^{-1}
280	460	4	2 240	3 450	0,29	2,32	3,45	2,26	217	1 100	1 070
280	460	4	2 240	3 450	0,29	2,32	3,45	2,26	217	1 100	1 070
280	460	4	2 900	4 900	0,37	1,8	2,69	1,76	270	1 100	660
280	460	4	2 900	4 900	0,37	1,8	2,69	1,76	270	1 100	660
286	514	5	3 000	4 400	0,34	2	2,98	1,96	290	1 100	790
286	514	5	3 000	4 400	0,34	2	2,98	1,96	290	1 100	790
288,8	341,2	2	520	1 220	0,13	5,23	7,79	5,11	82	1 300	–
288,8	341,2	2	520	1 220	0,13	5,23	7,79	5,11	82	1 300	–
288,8	341,2	2	710	1 760	0,18	3,8	5,66	3,72	–	1 200	–
288,8	341,2	2	710	1 760	0,18	3,8	5,66	3,72	–	1 200	–
290,2	369,8	2,1	970	2 040	0,18	3,76	5,59	3,67	129	1 300	1 100
290,2	369,8	2,1	970	2 040	0,18	3,76	5,59	3,67	129	1 300	1 100
290,2	369,8	2,1	1 180	2 600	0,25	2,74	4,08	2,68	–	1 100	–
290,2	369,8	2,1	1 180	2 600	0,25	2,74	4,08	2,68	–	1 100	–
294,6	405,4	3	1 560	3 000	0,25	2,74	4,08	2,68	156	1 300	1 090
294,6	405,4	3	1 560	3 000	0,25	2,74	4,08	2,68	156	1 300	1 090
294,6	405,4	3	1 930	3 900	0,28	2,45	3,64	2,39	226	260	–
294,6	405,4	3	2 000	4 000	0,33	2,04	3,04	2	225	1 100	810
294,6	405,4	3	2 000	4 000	0,33	2,04	3,04	2	225	1 100	810
300	440	4	2 360	4 400	0,32	2,12	3,15	2,07	241	1 100	780
300	440	4	2 360	4 400	0,32	2,12	3,15	2,07	241	1 100	780
300	440	4	2 700	5 200	0,39	1,71	2,54	1,67	365	1 000	520
300	440	4	2 700	5 200	0,39	1,71	2,54	1,67	365	1 000	520
300	480	4	2 360	3 650	0,28	2,43	3,61	2,37	238	1 100	1 010
300	480	4	2 360	3 650	0,28	2,43	3,61	2,37	238	1 100	1 010
300	480	4	3 000	5 300	0,36	1,86	2,77	1,82	260	1 100	620
300	480	4	3 000	5 300	0,36	1,86	2,77	1,82	260	1 100	620
306	554	5	3 550	5 400	0,33	2,03	3,02	1,98	335	950	680
306	554	5	3 550	5 400	0,33	2,03	3,02	1,98	335	950	680
310,2	369,8	2,1	620	1 460	0,14	4,82	7,18	4,71	100	1 300	–
310,2	369,8	2,1	620	1 460	0,14	4,82	7,18	4,71	100	1 300	–
310,2	369,8	2,1	915	2 240	0,19	3,58	5,33	3,5	–	1 100	–
310,2	369,8	2,1	915	2 240	0,19	3,58	5,33	3,5	–	1 100	–

Spherical roller bearings

Cylindrical or tapered bore

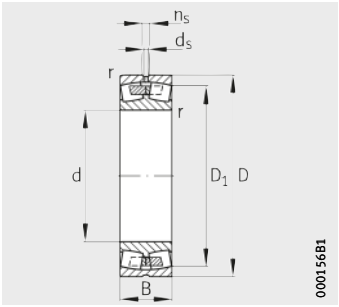

Design 2
With central rib
Cylindrical bore

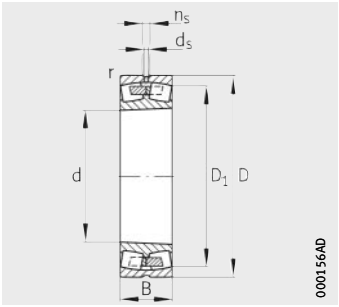

With central rib
K = taper 1:12
K30 = taper 1:30

Dimension table (continued) · Dimensions in mm

Designation	Design	Mass	Dimensions						
		m	d	D	B	r	D_1	d_s	n_s
		≈kg				min.	≈		
23960-B-K-MB	2	39,1	**300**	420	90	3	384,6	9,5	17,7
23960-B-MB	2	40,6	**300**	420	90	3	384,6	9,5	17,7
24960-B-K30-MB	2	48	**300**	420	118	3	381,3	6,3	12,2
24960-B-MB	2	48	**300**	420	118	3	381,3	6,3	12,2
23060-K-MB	2	72,2	**300**	460	118	4	412,6	9,5	17,7
23060-MB	2	73,8	**300**	460	118	4	412,6	9,5	17,7
24060-B-K30-MB	2	97,7	**300**	460	160	4	401,5	8	15
24060-B-MB	2	102	**300**	460	160	4	401,5	8	15
23160-B-K-MB	2	123	**300**	500	160	5	434,7	9,5	17,7
23160-B-MB	2	131	**300**	500	160	5	434,7	9,5	17,7
24160-B-K30	2	158	**300**	500	200	5	424,4	8	15
24160-B	2	159	**300**	500	200	5	424,4	8	15
22260-K-MB	2	136	**300**	540	140	5	468,8	12,5	23,5
22260-MB	2	142	**300**	540	140	5	468,8	12,5	23,5
23260-K-MB	2	192	**300**	540	192	5	458,7	12,5	23,5
23260-MB	2	195	**300**	540	192	5	458,7	12,5	23,5
22360-MB	2	299	**300**	620	185	7,5	523,6	12,5	23,5
22360-K-MB	2	365	**300**	620	185	7,5	523,6	12,5	23,5
23864-K-MB	2	17,9	**320**	400	60	2,1	378,1	4,8	9,5
23864-MB	2	17,9	**320**	400	60	2,1	378,1	4,8	9,5
24864-B-K30-MB	2	24,6	**320**	400	80	2,1	375,4	4,8	9,5
24864-B-MB	2	24,6	**320**	400	80	2,1	375,4	4,8	9,5
23964-K-MB	2	41	**320**	440	90	3	406,2	9,5	17,7
23964-MB	2	41,8	**320**	440	90	3	406,2	9,5	17,7
24964-K30-MB	2	49,8	**320**	440	118	3	402,4	6,3	12,2
24964-MB	2	49,8	**320**	440	118	3	402,4	6,3	12,2
23064-K-MB	2	77,1	**320**	480	121	4	432,6	9,5	17,7
23064-MB	2	79,9	**320**	480	121	4	432,6	9,5	17,7
24064-B-K30-MB	2	103	**320**	480	160	4	424	8	15
24064-B-MB	2	107	**320**	480	160	4	424	8	15
23164-K-MB	2	167	**320**	540	176	5	466,2	12,5	23,5
23164-MB	2	171	**320**	540	176	5	466,2	12,5	23,5
24164-B-K30	2	197	**320**	540	218	5	456,1	9,5	17,7
24164-B	2	204	**320**	540	218	5	456,1	9,5	17,7

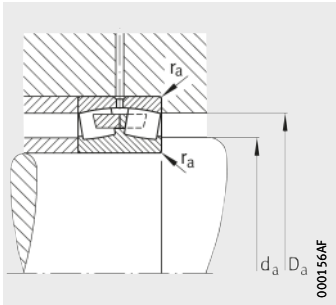

Mounting dimensions

Mounting dimensions			Basic load ratings		Calculation factors				Fatigue limit load	Limiting speed	Reference speed
d_a	D_a	r_a	dyn. C_r	stat. C_{0r}	e	Y_1	Y_2	Y_0	C_{ur}	n_G	n_B
min.	max.	max.	kN	kN					kN	min^{-1}	min^{-1}
312,4	407,6	2,5	1 270	2 650	0,2	3,42	5,09	3,34	165	1 190	1 000
312,4	407,6	2,5	1 270	2 650	0,2	3,42	5,09	3,34	165	1 190	1 000
312,4	407,6	2,5	1 560	3 400	0,26	2,57	3,83	2,52	–	1 000	–
312,4	407,6	2,5	1 560	3 400	0,26	2,57	3,83	2,52	–	1 000	–
314,6	445,4	3	1 960	3 650	0,25	2,69	4	2,63	223	1 100	960
314,6	445,4	3	1 960	3 650	0,25	2,69	4	2,63	223	1 100	960
314,6	445,4	3	2 500	5 200	0,35	1,95	2,9	1,91	300	1 000	700
314,6	445,4	3	2 500	5 200	0,35	1,95	2,9	1,91	300	1 000	700
320	480	4	2 650	4 900	0,33	2,06	3,06	2,01	270	1 100	720
320	480	4	2 650	4 900	0,33	2,06	3,06	2,01	270	1 100	720
320	480	4	3 250	6 300	0,4	1,67	2,49	1,63	540	900	455
320	480	4	3 250	6 300	0,4	1,67	2,49	1,63	540	900	455
320	520	4	2 750	4 400	0,27	2,47	3,67	2,41	300	1 000	900
320	520	4	2 750	4 400	0,27	2,47	3,67	2,41	300	1 000	900
320	520	4	3 450	6 200	0,37	1,83	2,72	1,79	300	1 000	560
320	520	4	3 450	6 200	0,37	1,83	2,72	1,79	300	1 000	560
332	588	6	4 000	6 100	0,33	2,06	3,06	2,01	375	900	630
332	588	6	4 000	6 100	0,33	2,06	3,06	2,01	375	900	630
330,2	389,8	2,1	680	1 630	0,13	5,06	7,53	4,95	113	1 200	–
330,2	389,8	2,1	680	1 630	0,13	5,06	7,53	4,95	113	1 200	–
330,2	389,8	2,1	965	2 450	0,18	3,8	5,66	3,72	220	1 100	–
330,2	389,8	2,1	965	2 450	0,18	3,8	5,66	3,72	220	1 100	–
332,4	427,6	2,5	1 310	2 750	0,19	3,62	5,39	3,54	202	1 100	930
332,4	427,6	2,5	1 310	2 750	0,19	3,62	5,39	3,54	202	1 100	930
332,4	427,6	2,5	1 630	3 600	0,25	2,71	4,04	2,65	–	1 000	–
332,4	427,6	2,5	1 630	3 600	0,25	2,71	4,04	2,65	–	1 000	–
334,6	465,4	3	2 040	4 000	0,25	2,74	4,08	2,68	243	1 100	900
334,6	465,4	3	2 040	4 000	0,25	2,74	4,08	2,68	243	1 100	900
334,6	465,4	3	2 600	5 400	0,33	2,06	3,06	2,01	360	950	660
334,6	465,4	3	2 600	5 400	0,33	2,06	3,06	2,01	360	950	660
340	520	4	3 200	6 000	0,34	1,98	2,94	1,93	305	950	650
340	520	4	3 200	6 000	0,34	1,98	2,94	1,93	305	950	650
340	520	4	3 800	7 350	0,41	1,65	2,46	1,61	530	850	415
340	520	4	3 800	7 350	0,41	1,65	2,46	1,61	530	850	415

Spherical roller bearings

Cylindrical or tapered bore

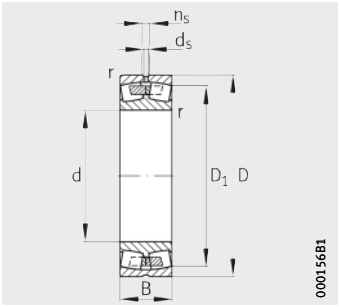

Design 2
With central rib
Cylindrical bore

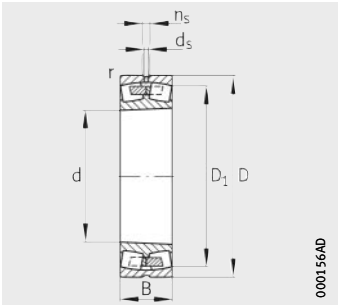

With central rib
K = taper 1:12
K30 = taper 1:30

Dimension table (continued) · Dimensions in mm

Designation	Design	Mass	Dimensions						
		m	d	D	B	r	D_1	d_s	n_s
		≈kg				min.	≈		
22264-K-MB	2	166	**320**	580	150	5	503,5	12,5	23,5
22264-MB	2	177	**320**	580	150	5	503,5	12,5	23,5
23264-K-MB	2	229	**320**	580	208	5	489,6	12,5	23,5
23264-MB	2	242	**320**	580	208	5	489,6	12,5	23,5
22364-B-MB	2	350	**320**	670	200	7,5	568,1	12,5	23,5
22364-B-K-MB	2	433	**320**	670	200	7,5	568,1	12,5	23,5
23868-MB	2	18,7	**340**	420	60	2,1	398,3	4,8	9,5
23868-K-MB	2	18,7	**340**	420	60	2,1	398,3	4,8	9,5
24868-B-K30-MB	2	28,4	**340**	420	80	2,1	396	4,8	9,5
24868-B-MB	2	28,4	**340**	420	80	2,1	396	4,8	9,5
23968-MB	2	47,8	**340**	460	90	3	426,7	9,5	17,7
24968-B-K30-MB	2	56,7	**340**	460	118	3	422,4	6,3	12,2
24968-B-MB	2	56,7	**340**	460	118	3	422,4	6,3	12,2
23068-K-MB	2	101	**340**	520	133	5	464,6	12,5	23,5
23068-MB	2	105	**340**	520	133	5	464,6	12,5	23,5
24068-B-K30-MB	2	143	**340**	520	180	5	457,1	9,5	17,7
24068-B-MB	2	146	**340**	520	180	5	457,1	9,5	17,7
23168-B-K-MB	2	210	**340**	580	190	5	499,5	12,5	23,5
23168-B-MB	2	217	**340**	580	190	5	499,5	12,5	23,5
24168-B-K30	2	260	**340**	580	243	5	481,1	9,5	17,7
24168-B	2	266	**340**	580	243	5	481,1	9,5	17,7
22268-B-MB	2	226	**340**	620	165	6	538,7	12,5	23,5
22268-B-K-MB	2	311	**340**	620	165	6	538,7	12,5	23,5
23268-B-K-MB	2	291	**340**	620	224	6	521,2	12,5	23,5
23268-B-MB	2	309	**340**	620	224	6	521,2	12,5	23,5
22368-MB	2	451	**340**	710	212	7,5	602,1	12,5	23,5
23872-MB	2	19,7	**360**	440	60	2,1	418,5	4,8	9,5
23872-K-MB	2	19,7	**360**	440	60	2,1	418,5	4,8	9,5
24872-B-K30-MB	2	30,3	**360**	440	80	2,1	415,4	4,8	9,5
24872-B-MB	2	30,3	**360**	440	80	2,1	415,4	4,8	9,5
23972-K-MB	2	45	**360**	480	90	3	447,1	9,5	17,7
23972-MB	2	46,5	**360**	480	90	3	447,1	9,5	17,7
24972-B-MB	2	57,3	**360**	480	118	3	443,8	6,3	12,2
24972-B-K30-MB	2	57,3	**360**	480	118	3	443,8	6,3	12,2

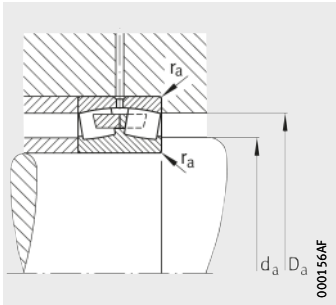

Mounting dimensions

Mounting dimensions			Basic load ratings		Calculation factors				Fatigue limit load	Limiting speed	Reference speed
d_a	D_a	r_a	dyn. C_r	stat. C_{0r}	e	Y_1	Y_2	Y_0	C_{ur}	n_G	n_B
min.	max.	max.	kN	kN					kN	min^{-1}	min^{-1}
340	560	4	3 050	4 900	0,27	2,47	3,67	2,41	345	950	830
340	560	4	3 050	4 900	0,27	2,47	3,67	2,41	345	950	830
340	560	4	3 900	6 950	0,37	1,8	2,69	1,76	330	950	510
340	560	4	3 900	6 950	0,37	1,8	2,69	1,76	330	950	510
352	638	6	4 400	6 800	0,33	2,06	3,06	2,01	495	800	560
352	638	6	4 400	6 800	0,33	2,06	3,06	2,01	540	800	560
350,2	409,8	2,1	710	1 730	0,13	5,32	7,92	5,2	121	1 100	–
350,2	409,8	2,1	710	1 730	0,13	5,32	7,92	5,2	121	1 100	–
350,2	409,8	2,1	965	2 500	0,18	3,8	5,66	3,72	151	980	–
350,2	409,8	2,1	965	2 500	0,18	3,8	5,66	3,72	151	980	–
352,4	447,6	2,5	1 370	3 000	0,18	3,85	5,73	3,76	199	1 100	860
352,4	447,6	2,5	1 700	3 750	0,24	2,84	4,23	2,78	–	950	–
352,4	447,6	2,5	1 700	3 750	0,24	2,84	4,23	2,78	–	950	–
358	502	4	2 360	4 550	0,25	2,69	4	2,63	285	1 000	840
358	502	4	2 360	4 550	0,25	2,69	4	2,63	285	1 000	840
358	502	4	3 100	6 550	0,34	1,98	2,94	1,93	530	850	600
358	502	4	3 100	6 550	0,34	1,98	2,94	1,93	530	850	600
360	560	4	3 650	6 950	0,34	1,98	2,94	1,93	570	900	590
360	560	4	3 650	6 950	0,34	1,98	2,94	1,93	570	900	590
360	560	4	4 400	8 500	0,43	1,56	2,32	1,53	680	800	380
360	560	4	4 400	8 500	0,43	1,56	2,32	1,53	680	800	380
366	594	5	3 550	5 850	0,28	2,43	3,61	2,37	470	850	750
366	594	5	3 550	5 850	0,28	2,43	3,61	2,37	470	850	750
366	594	5	4 500	8 150	0,38	1,78	2,65	1,74	650	850	465
366	594	5	4 500	8 150	0,38	1,78	2,65	1,74	650	850	465
372	678	6	5 200	8 150	0,33	2,06	3,06	2,01	485	750	500
370,2	429,8	2,1	750	1 900	0,12	5,72	8,51	5,59	129	1 100	–
370,2	429,8	2,1	750	1 900	0,12	5,72	8,51	5,59	129	1 100	–
370	430	2	1 040	2 700	0,16	4,22	6,29	4,13	181	940	–
370	430	2	1 040	2 700	0,16	4,22	6,29	4,13	181	940	–
372,4	467,6	2,5	1 430	3 200	0,17	4,05	6,04	3,96	209	1 000	800
372,4	467,6	2,5	1 430	3 200	0,17	4,05	6,04	3,96	209	1 000	800
372,4	467,6	2,5	1 730	3 900	0,22	3,01	4,48	2,94	330	850	–
372,4	467,6	2,5	1 730	3 900	0,22	3,01	4,48	2,94	330	850	–

Spherical roller bearings

Cylindrical or tapered bore

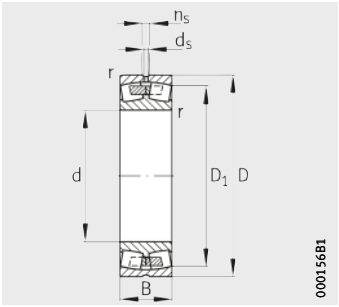

Design 2
With central rib
Cylindrical bore

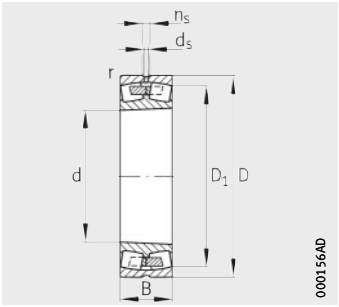

With central rib
K = taper 1:12
K30 = taper 1:30

Dimension table (continued) · Dimensions in mm

Designation	Design	Mass	Dimensions						
		m	d	D	B	r	D_1	d_s	n_s
		≈kg				min.	≈		
23072-K-MB	2	107	**360**	540	134	5	485,2	12,5	23,5
23072-MB	2	112	**360**	540	134	5	485,2	12,5	23,5
24072-B-K30-MB	2	147	**360**	540	180	5	478,5	9,5	17,7
24072-B-MB	2	149	**360**	540	180	5	478,5	9,5	17,7
23172-K-MB	2	221	**360**	600	192	5	520	12,5	23,5
23172-MB	2	227	**360**	600	192	5	520	12,5	23,5
24172-B-K30	2	275	**360**	600	243	5	503,6	9,5	17,7
24172-B	2	279	**360**	600	243	5	503,6	9,5	17,7
22272-K-MB	2	257	**360**	650	170	6	565	12,5	23,5
22272-MB	2	257	**360**	650	170	6	565	12,5	23,5
23272-B-K-MB	2	328	**360**	650	232	6	548,3	12,5	23,5
23272-B-MB	2	347	**360**	650	232	6	548,3	12,5	23,5
22372-MB	2	500	**360**	750	224	7,5	634,9	12,5	23,5
22372-K-MB	2	625	**360**	750	224	7,5	634,9	12,5	23,5
23876-MB	2	33,5	**380**	480	75	2,1	450,7	6,3	12,2
23876-K-MB	2	33,5	**380**	480	75	2,1	450,7	6,3	12,2
24876-MB	2	44,7	**380**	480	100	2,1	448	6,3	12,2
24876-K30-MB	2	44,7	**380**	480	100	2,1	448	6,3	12,2
23976-K-MB	2	66,3	**380**	520	106	4	477,6	9,5	17,7
23976-MB	2	69,1	**380**	520	106	4	477,6	9,5	17,7
24976-B-K30-MB	2	91,1	**380**	520	140	4	475,1	6,3	12,2
24976-B-MB	2	91,1	**380**	520	140	4	475,1	6,3	12,2
23076-B-K-MB	2	115	**380**	560	135	5	505,6	12,5	23,5
23076-B-MB	2	117	**380**	560	135	5	505,6	12,5	23,5
24076-B-K30-MB	2	155	**380**	560	180	5	499	9,5	17,7
24076-B-MB	2	158	**380**	560	180	5	499	9,5	17,7
23176-K-MB	2	226	**380**	620	194	5	539,6	12,5	23,5
23176-MB	2	241	**380**	620	194	5	539,6	12,5	23,5
24176-B-K30	2	277	**380**	620	243	5	525,8	9,5	17,7
24176-B	2	279	**380**	620	243	5	525,8	9,5	17,7
22276-K-MB	2	284	**380**	680	175	6	592,6	12,5	23,5
22276-MB	2	284	**380**	680	175	6	592,6	12,5	23,5
23276-B-K-MB	2	367	**380**	680	240	6	576,4	12,5	23,5
23276-B-MB	2	390	**380**	680	240	6	576,4	12,5	23,5
22376-B-MB	2	533	**380**	780	230	7,5	663,5	12,5	23,5

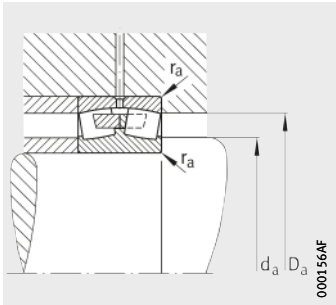

Mounting dimensions

Mounting dimensions			Basic load ratings		Calculation factors				Fatigue limit load	Limiting speed	Reference speed
d_a	D_a	r_a	dyn. C_r	stat. C_{0r}	e	Y_1	Y_2	Y_0	C_{ur}	n_G	n_B
min.	max.	max.	kN	kN					kN	min^{-1}	min^{-1}
378	522	4	2 450	4 800	0,25	2,74	4,08	2,68	295	950	790
378	522	4	2 450	4 800	0,25	2,74	4,08	2,68	295	950	790
378	522	4	3 250	6 800	0,33	2,06	3,06	2,01	530	800	560
378	522	4	3 250	6 800	0,33	2,06	3,06	2,01	530	800	560
380	580	4	3 800	7 350	0,33	2,06	3,06	2,01	360	850	550
380	580	4	3 800	7 350	0,33	2,06	3,06	2,01	360	850	550
380	580	4	4 500	9 000	0,41	1,63	2,43	1,6	550	750	355
380	580	4	4 500	9 000	0,41	1,63	2,43	1,6	550	750	355
386	624	5	3 900	6 550	0,28	2,43	3,61	2,37	420	800	700
386	624	5	3 900	6 550	0,28	2,43	3,61	2,37	420	800	700
386	624	5	4 900	9 150	0,38	1,78	2,65	1,74	720	800	425
386	624	5	4 900	9 150	0,38	1,78	2,65	1,74	720	800	425
392	718	6	5 600	8 800	0,33	2,06	3,06	2,01	650	700	480
392	718	6	5 600	8 800	0,33	2,06	3,06	2,01	650	700	480
390,2	469,8	2,1	965	2 400	0,14	4,98	7,41	4,87	163	1 000	–
390,2	469,8	2,1	965	2 400	0,14	4,98	7,41	4,87	163	1 000	–
390,2	469,8	2,1	1 400	3 600	0,18	3,66	5,46	3,58	–	850	–
390,2	469,8	2,1	1 400	3 600	0,18	3,66	5,46	3,58	–	850	–
394,6	505,4	3	1 760	4 000	0,19	3,58	5,33	3,5	265	950	750
394,6	505,4	3	1 760	4 000	0,19	3,58	5,33	3,5	265	950	750
394,6	505,4	3	2 280	5 200	0,25	2,69	4	2,63	435	800	–
394,6	505,4	3	2 280	5 200	0,25	2,69	4	2,63	435	800	–
398	542	4	2 550	5 300	0,24	2,84	4,23	2,78	430	900	730
398	542	4	2 550	5 300	0,24	2,84	4,23	2,78	430	900	730
398	542	4	3 350	7 200	0,31	2,15	3,2	2,1	580	750	520
398	542	4	3 350	7 200	0,31	2,15	3,2	2,1	580	750	520
400	600	4	4 050	8 150	0,32	2,12	3,15	2,07	385	800	510
400	600	4	4 050	8 150	0,32	2,12	3,15	2,07	385	800	510
400	600	4	4 650	9 500	0,39	1,71	2,54	1,67	770	700	330
400	600	4	4 650	9 500	0,39	1,71	2,54	1,67	770	700	330
406	654	5	4 150	7 100	0,27	2,51	3,74	2,45	550	750	630
406	654	5	4 150	7 100	0,27	2,51	3,74	2,45	550	750	630
406	654	5	5 300	9 800	0,37	1,8	2,69	1,76	780	750	395
406	654	5	5 300	9 800	0,37	1,8	2,69	1,76	780	750	395
412	748	6	6 000	9 500	0,32	2,13	3,17	2,08	690	670	450

Spherical roller bearings

Cylindrical or tapered bore

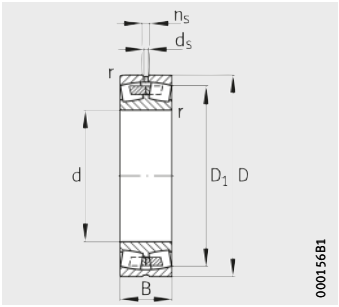

Design 2
With central rib
Cylindrical bore

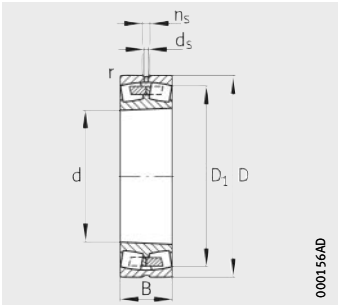

With central rib
K = taper 1:12
K30 = taper 1:30

Dimension table (continued) · Dimensions in mm

Designation	Design	Mass	Dimensions						
		m	d	D	B	r	D_1	d_s	n_s
		≈kg				min.	≈		
23880-MB	2	35,2	**400**	500	75	2,1	471	6,3	12,2
23880-K-MB	2	43,6	**400**	500	75	2,1	471	6,3	12,2
24880-B-K30-MB	2	16,8	**400**	500	100	2,1	468,5	6,3	12,2
24880-B-MB	2	16,8	**400**	500	100	2,1	468,5	6,3	12,2
23980-B-K-MB	2	68,2	**400**	540	106	4	499	9,5	17,7
23980-B-MB	2	72,9	**400**	540	106	4	499	9,5	17,7
24980-B-K30-MB	2	95,7	**400**	540	140	4	494,6	6,3	12,2
24980-B-MB	2	95,7	**400**	540	140	4	494,6	6,3	12,2
23080-K-MB	2	143	**400**	600	148	5	540,5	12,5	23,5
23080-MB	2	151	**400**	600	148	5	540,5	12,5	23,5
24080-B-K30-MB	2	196	**400**	600	200	5	530,9	12,5	23,5
24080-B-MB	2	198	**400**	600	200	5	530,9	12,5	23,5
23180-B-K-MB	2	261	**400**	650	200	6	567,2	12,5	23,5
23180-B-MB	2	270	**400**	650	200	6	567,2	12,5	23,5
24180-B-K30	2	312	**400**	650	250	6	553,5	12,5	23,5
24180-B	2	326	**400**	650	250	6	553,5	12,5	23,5
22280-MB	2	329	**400**	720	185	6	629,3	12,5	23,5
22280-K-MB	2	414	**400**	720	185	6	629,3	12,5	23,5
23280-B-K-MB	2	442	**400**	720	256	6	609,8	12,5	23,5
23280-B-MB	2	469	**400**	720	256	6	609,8	12,5	23,5
22380-MB	2	627	**400**	820	243	7,5	694,4	12,5	23,5
22380-K-MB	2	800	**400**	820	243	7,5	694,4	12,5	23,5
23884-MB	2	36,3	**420**	520	75	2,1	491,3	6,3	12,2
23884-K-MB	2	36,3	**420**	520	75	2,1	491,3	6,3	12,2
24884-K30-MB	2	47,9	**420**	520	100	2,1	488,9	6,3	12,2
24884-MB	2	47,9	**420**	520	100	2,1	488,9	6,3	12,2
23984-MB	2	75,5	**420**	560	106	4	519,5	9,5	17,7
23984-K-MB	2	78	**420**	560	106	4	519,5	9,5	17,7
24984-B-K30-MB	2	101	**420**	560	140	4	516,8	6,3	12,2
24984-B-MB	2	101	**420**	560	140	4	516,8	6,3	12,2
23084-B-K-MB	2	155	**420**	620	150	5	560,7	12,5	23,5
23084-B-MB	2	162	**420**	620	150	5	560,7	12,5	23,5
24084-B-K30-MB	2	214	**420**	620	200	5	550,2	12,5	23,5
24084-B-MB	2	217	**420**	620	200	5	550,2	12,5	23,5

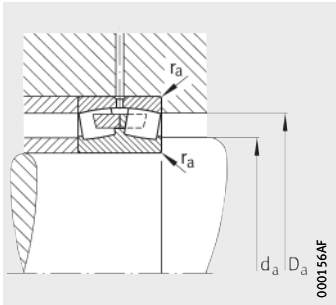

Mounting dimensions

Mounting dimensions			Basic load ratings		Calculation factors				Fatigue limit load	Limiting speed	Reference speed
d_a	D_a	r_a	dyn. C_r	stat. C_{0r}	e	Y_1	Y_2	Y_0	C_{ur}	n_G	n_B
min.	max.	max.	kN	kN					kN	min^{-1}	min^{-1}
410,2	489,8	2,1	1 060	2 650	0,13	5,14	7,66	5,03	174	950	–
410,2	489,8	2,1	1 060	2 650	0,13	5,14	7,66	5,03	174	950	–
410,2	489,8	2,1	1 460	3 800	0,18	3,8	5,66	3,72	248	800	–
410,2	489,8	2,1	1 460	3 800	0,18	3,8	5,66	3,72	248	800	–
414,6	525,4	3	1 830	4 150	0,18	3,71	5,52	3,63	275	900	710
414,6	525,4	3	1 830	4 150	0,18	3,71	5,52	3,63	275	900	710
414,6	525,4	3	2 280	5 300	0,24	2,81	4,19	2,75	188	750	–
414,6	525,4	3	2 280	5 300	0,24	2,81	4,19	2,75	188	750	–
418	582	4	3 050	6 200	0,24	2,79	4,15	2,73	365	800	670
418	582	4	3 050	6 200	0,24	2,79	4,15	2,73	365	800	670
418	582	4	3 900	8 500	0,33	2,06	3,06	2,01	670	700	485
418	582	4	3 900	8 500	0,33	2,06	3,06	2,01	670	700	485
426	624	5	4 250	8 500	0,31	2,15	3,2	2,1	670	750	485
426	624	5	4 250	8 500	0,31	2,15	3,2	2,1	670	750	485
426	624	5	5 100	10 400	0,39	1,72	2,56	1,68	720	670	310
426	624	5	5 100	10 400	0,39	1,72	2,56	1,68	720	670	310
426	694	5	4 650	7 800	0,26	2,55	3,8	2,5	600	700	600
426	694	5	4 650	7 800	0,26	2,55	3,8	2,5	600	700	600
426	694	5	5 700	10 800	0,38	1,78	2,65	1,74	820	700	370
426	694	5	5 700	10 800	0,38	1,78	2,65	1,74	820	700	370
432	788	6	6 550	10 600	0,33	2,07	3,09	2,03	610	670	400
432	788	6	6 550	10 600	0,33	2,07	3,09	2,03	610	670	400
430,2	509,8	2,1	1 080	2 750	0,12	5,42	8,06	5,3	185	900	–
430,2	509,8	2,1	1 080	2 750	0,12	5,42	8,06	5,3	185	900	–
430,2	509,8	2,1	1 500	3 900	0,17	3,95	5,88	3,86	–	750	–
430,2	509,8	2,1	1 500	3 900	0,17	3,95	5,88	3,86	–	750	–
434,6	545,4	3	1 900	4 500	0,18	3,85	5,73	3,76	300	850	660
434,6	545,4	3	1 900	4 500	0,18	3,85	5,73	3,76	300	850	660
434,6	545,4	3	2 360	5 600	0,23	2,92	4,35	2,86	–	700	–
434,6	545,4	3	2 360	5 600	0,23	2,92	4,35	2,86	–	700	–
438	602	4	3 150	6 550	0,24	2,84	4,23	2,78	395	800	640
438	602	4	3 150	6 550	0,24	2,84	4,23	2,78	395	800	640
438	602	4	4 000	8 800	0,32	2,13	3,17	2,08	710	670	460
438	602	4	4 000	8 800	0,32	2,13	3,17	2,08	710	670	460

Spherical roller bearings

Cylindrical or tapered bore

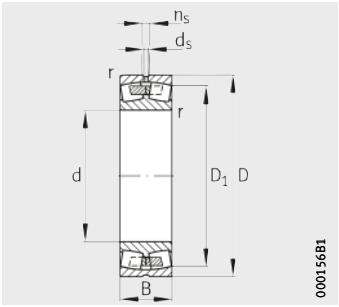

Design 2
With central rib
Cylindrical bore

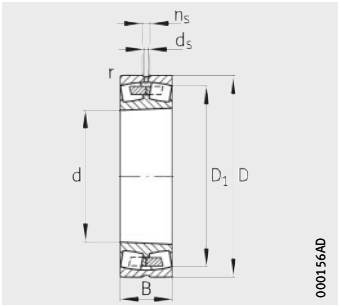

With central rib
K = taper 1:12
K30 = taper 1:30

Dimension table (continued) · Dimensions in mm

Designation	Design	Mass	Dimensions						
		m	d	D	B	r	D_1	d_s	n_s
		≈kg				min.	≈		
23184-K-MB	2	339	**420**	700	224	6	605,4	12,5	23,5
23184-MB	2	360	**420**	700	224	6	605,4	12,5	23,5
24184-B-K30	2	407	**420**	700	280	6	590,3	12,5	23,5
24184-B	2	442	**420**	700	280	6	590,3	12,5	23,5
22284-K-MB	2	404	**420**	760	195	7,5	661,8	12,5	23,5
22284-MB	2	404	**420**	760	195	7,5	661,8	12,5	23,5
23284-B-K-MB	2	539	**420**	760	272	7,5	642,2	12,5	23,5
23284-B-MB	2	555	**420**	760	272	7,5	642,2	12,5	23,5
22384-MB	2	746	**420**	850	250	9,5	722,6	12,5	23,5
23888-K-MB	2	36	**440**	540	75	2,1	511,5	6,3	12,2
23888-MB	2	38,5	**440**	540	75	2,1	511,5	6,3	12,2
24888-B-K30-MB	2	49,2	**440**	540	100	2,1	509,5	6,3	12,2
24888-B-MB	2	49,2	**440**	540	100	2,1	509,5	6,3	12,2
23988-K-MB	2	98,3	**440**	600	118	4	552,8	12,5	23,5
23988-MB	2	101	**440**	600	118	4	552,8	12,5	23,5
24988-B-K30-MB	2	125	**440**	600	160	4	548,6	8	15
24988-B-MB	2	125	**440**	600	160	4	548,6	8	15
23088-K-MB	2	177	**440**	650	157	6	586,8	12,5	23,5
23088-MB	2	190	**440**	650	157	6	586,8	12,5	23,5
24088-B-K30-MB	2	247	**440**	650	212	6	575,6	12,5	23,5
24088-B-MB	2	250	**440**	650	212	6	575,6	12,5	23,5
23188-K-MB	2	378	**440**	720	226	6	626	12,5	23,5
23188-MB	2	381	**440**	720	226	6	626	12,5	23,5
24188-B-K30	2	451	**440**	720	280	6	612,4	12,5	23,5
24188-B	2	453	**440**	720	280	6	612,4	12,5	23,5
22288-MB	2	438	**440**	790	200	7,5	689,5	12,5	23,5
22288-K-MB	2	440	**440**	790	200	7,5	689,5	12,5	23,5
23288-B-K-MB	2	586	**440**	790	280	7,5	669,3	12,5	23,5
23288-B-MB	2	615	**440**	790	280	7,5	669,3	12,5	23,5
22388-B-MB	2	895	**440**	900	265	9,5	763,9	12,5	23,5
23892-K-MB	2	58	**460**	580	90	3	545,7	6,3	12,2
23892-MB	2	58	**460**	580	90	3	545,7	6,3	12,2
24892-B-MB	2	71	**460**	580	118	3	542,6	6,3	12,2
24892-B-K30-MB	2	71	**460**	580	118	3	542,6	6,3	12,2

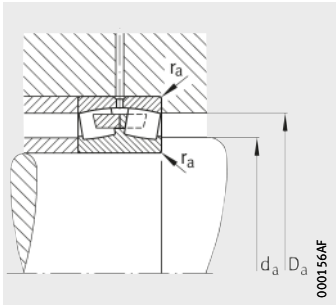

Mounting dimensions

Mounting dimensions			Basic load ratings		Calculation factors				Fatigue limit load	Limiting speed	Reference speed
d_a	D_a	r_a	dyn. C_r	stat. C_{0r}	e	Y_1	Y_2	Y_0	C_{ur}	n_G	n_B
min.	max.	max.	kN	kN					kN	min^{-1}	min^{-1}
446	674	5	5 000	9 650	0,33	2,03	3,02	1,98	465	700	455
446	674	5	5 000	9 650	0,33	2,03	3,02	1,98	465	700	455
446	674	5	6 200	12 700	0,4	1,67	2,49	1,63	980	630	265
446	674	5	6 200	12 700	0,4	1,67	2,49	1,63	980	630	265
452	728	6	5 100	8 650	0,27	2,51	3,74	2,45	630	670	500
452	728	6	5 100	8 650	0,27	2,51	3,74	2,45	630	670	500
452	728	6	6 550	12 200	0,38	1,77	2,64	1,73	930	670	340
452	728	6	6 550	12 200	0,38	1,77	2,64	1,73	930	670	340
460	810	8	6 950	11 200	0,33	2,07	3,09	2,03	780	630	400
450,2	529,8	2,1	1 120	3 000	0,12	5,72	8,51	5,59	199	850	–
450,2	529,8	2,1	1 120	3 000	0,12	5,72	8,51	5,59	199	850	–
450,2	530	2	1 500	4 000	0,18	3,76	5,59	3,67	265	740	–
450,2	530	2	1 500	4 000	0,18	3,76	5,59	3,67	265	740	–
454,6	585,4	3	2 240	5 200	0,18	3,66	5,46	3,58	295	800	620
454,6	585,4	3	2 240	5 200	0,18	3,66	5,46	3,58	295	800	620
454,6	585,4	3	2 900	6 700	0,25	2,71	4,04	2,65	–	670	–
454,6	585,4	3	2 900	6 700	0,25	2,71	4,04	2,65	–	670	–
463	627	5	3 400	7 100	0,24	2,84	4,23	2,78	405	750	610
463	627	5	3 400	7 100	0,24	2,84	4,23	2,78	405	750	610
463	627	5	4 300	9 650	0,32	2,12	3,15	2,07	750	630	430
463	627	5	4 300	9 650	0,32	2,12	3,15	2,07	750	630	430
466	694	5	5 200	10 400	0,32	2,1	3,13	2,06	485	700	425
466	694	5	5 200	10 400	0,32	2,1	3,13	2,06	485	700	425
466	694	5	6 400	13 200	0,38	1,76	2,62	1,72	1 020	600	255
466	694	5	6 400	13 200	0,38	1,76	2,62	1,72	1 020	600	255
472	758	6	5 400	9 300	0,27	2,51	3,74	2,45	680	630	530
472	758	6	5 400	9 300	0,27	2,51	3,74	2,45	680	630	530
472	758	6	7 100	13 400	0,37	1,8	2,69	1,76	990	630	320
472	758	6	7 100	13 400	0,37	1,8	2,69	1,76	990	630	320
480	860	8	7 800	12 700	0,31	2,15	3,2	2,1	910	600	360
472,4	567,6	2,5	1 430	3 650	0,14	4,98	7,41	4,87	236	800	–
472,4	567,6	2,5	1 430	3 650	0,14	4,98	7,41	4,87	236	800	–
472,4	567,6	2,5	1 930	5 100	0,18	3,76	5,59	3,67	330	670	–
472,4	567,6	2,5	1 930	5 100	0,18	3,76	5,59	3,67	330	670	–

Spherical roller bearings

Cylindrical or tapered bore

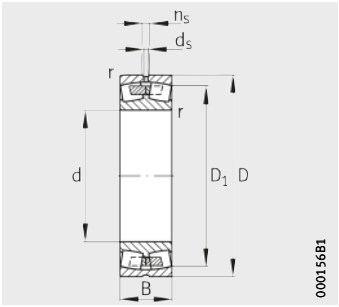

Design 2
With central rib
Cylindrical bore

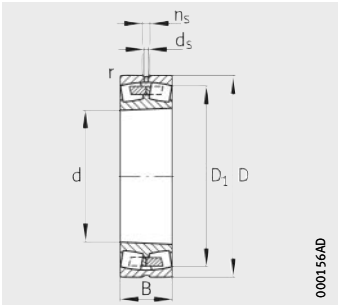

With central rib
K = taper 1:12
K30 = taper 1:30

Dimension table (continued) · Dimensions in mm

Designation	Design	Mass	Dimensions						
		m	d	D	B	r	D_1	d_s	n_s
		≈kg				min.	≈		
23992-B-K-MB	2	103	**460**	620	118	4	573,3	12,5	23,5
23992-B-MB	2	111	**460**	620	118	4	573,3	12,5	23,5
24992-K30-MB	2	137	**460**	620	160	4	569,3	8	15
24992-MB	2	137	**460**	620	160	4	569,3	8	15
23092-B-MB	2	208	**460**	680	163	6	612,2	12,5	23,5
23092-B-K-MB	2	204	**460**	680	163	6	612,2	12,5	23,5
24092-B-MB	2	282	**460**	680	218	6	603,3	12,5	23,5
24092-B-K30-MB	2	277	**460**	680	218	6	603,3	12,5	23,5
23192-K-MB	2	420	**460**	760	240	7,5	661,4	12,5	23,5
23192-MB	2	447	**460**	760	240	7,5	661,4	12,5	23,5
24192-B-K30-MB	2	578	**460**	760	300	7,5	642,8	12,5	23,5
24192-B-MB	2	582	**460**	760	300	7,5	642,8	12,5	23,5
22292-MB	2	543	**460**	830	212	7,5	723,8	12,5	23,5
23292-K-MB	2	699	**460**	830	296	7,5	701,6	12,5	23,5
23292-MB	2	700	**460**	830	296	7,5	701,6	12,5	23,5
22392-MB	2	710	**460**	950	280	9,5	805,3	12,5	23,5
23896-MB	2	60,8	**480**	600	90	3	566	6,3	12,2
23896-K-MB	2	60,8	**480**	600	90	3	566	6,3	12,2
24896-B-K30-MB	2	74	**480**	600	118	3	562,8	6,3	12,2
24896-B-MB	2	74	**480**	600	118	3	562,8	6,3	12,2
23996-B-K-MB	2	121	**480**	650	128	5	598,8	12,5	23,5
23996-B-MB	2	126	**480**	650	128	5	598,8	12,5	23,5
24996-B-K30-MB	2	153	**480**	650	170	5	596,1	8	15
24996-B-MB	2	158	**480**	650	170	5	596,1	8	15
23096-K-MB	2	214	**480**	700	165	6	632,6	12,5	23,5
23096-MB	2	222	**480**	700	165	6	632,6	12,5	23,5
24096-B-K30-MB	2	289	**480**	700	218	6	625,4	12,5	23,5
24096-B-MB	2	291	**480**	700	218	6	625,4	12,5	23,5
23196-K-MB	2	470	**480**	790	248	7,5	688,3	12,5	23,5
23196-MB	2	508	**480**	790	248	7,5	688,3	12,5	23,5
24196-B-K30-MB	2	628	**480**	790	308	7,5	669,9	12,5	23,5
24196-B-MB	2	637	**480**	790	308	7,5	669,9	12,5	23,5
22296-MB	2	597	**480**	870	224	7,5	757,8	12,5	23,5
23296-K-MB	2	806	**480**	870	310	7,5	734,8	12,5	23,5
23296-MB	2	830	**480**	870	310	7,5	734,8	12,5	23,5
22396-B-MB	2	1 060	**480**	980	290	9,5	829,4	12,5	23,5

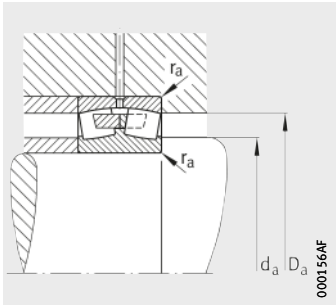

Mounting dimensions

Mounting dimensions			Basic load ratings		Calculation factors				Fatigue limit load	Limiting speed	Reference speed
d_a	D_a	r_a	dyn. C_r	stat. C_{0r}	e	Y_1	Y_2	Y_0	C_{ur}	n_G	n_B
min.	max.	max.	kN	kN					kN	min^{-1}	min^{-1}
474,6	605,4	3	2 280	5 400	0,18	3,85	5,73	3,76	370	750	590
474,6	605,4	3	2 280	5 400	0,18	3,85	5,73	3,76	370	750	590
474,6	605,4	3	3 000	6 950	0,24	2,81	4,19	2,75	–	670	–
474,6	605,4	3	3 000	6 950	0,24	2,81	4,19	2,75	–	670	–
483	657	5	3 650	7 650	0,24	2,84	4,23	2,78	520	700	560
483	657	5	3 650	7 650	0,24	2,84	4,23	2,78	520	700	560
483	657	5	4 750	10 600	0,31	2,16	3,22	2,12	710	630	405
483	657	5	4 750	10 600	0,31	2,16	3,22	2,12	710	630	400
492	728	6	5 850	11 600	0,32	2,12	3,15	2,07	530	630	390
492	728	6	5 850	11 600	0,32	2,12	3,15	2,07	530	630	390
492	728	6	7 500	15 600	0,39	1,73	2,58	1,69	1 160	560	227
492	728	6	7 500	15 600	0,39	1,73	2,58	1,69	1 160	560	227
492	798	6	6 100	10 800	0,27	2,51	3,74	2,45	–	600	480
492	798	6	7 800	15 000	0,37	1,8	2,69	1,76	620	600	295
492	798	6	7 800	15 000	0,37	1,8	2,69	1,76	620	600	295
492	798	6	8 500	14 000	0,33	2,07	3,09	2,03	–	560	340
492,4	587,6	2,5	1 460	3 900	0,13	5,23	7,79	5,11	248	750	–
492,4	587,6	2,5	1 460	3 900	0,13	5,23	7,79	5,11	248	750	–
492,4	587,6	2,5	2 000	5 400	0,17	3,9	5,81	3,81	–	670	–
492,4	587,6	2,5	2 000	5 400	0,17	3,9	5,81	3,81	–	670	–
498	632	4	2 550	6 000	0,18	3,76	5,59	3,67	460	700	570
498	632	4	2 550	6 000	0,18	3,76	5,59	3,67	460	700	570
498	632	4	3 250	7 800	0,24	2,76	4,11	2,7	–	630	–
498	632	4	3 250	7 800	0,24	2,76	4,11	2,7	–	630	–
503	677	5	3 800	8 150	0,23	2,9	4,31	2,83	455	670	550
503	677	5	3 800	8 150	0,23	2,9	4,31	2,83	455	670	550
503	677	5	4 900	11 200	0,3	2,25	3,34	2,2	830	600	380
503	677	5	4 900	11 200	0,3	2,25	3,34	2,2	830	600	380
512	758	6	6 300	12 700	0,32	2,12	3,15	2,07	570	630	370
512	758	6	6 300	12 700	0,32	2,12	3,15	2,07	570	630	370
512	758	6	8 000	16 600	0,39	1,75	2,61	1,71	1 190	560	213
512	758	6	8 000	16 600	0,39	1,75	2,61	1,71	1 190	560	220
512	838	6	6 550	11 400	0,27	2,51	3,74	2,45	–	600	480
512	838	6	8 800	17 000	0,37	1,83	2,72	1,79	700	600	265
512	838	6	8 800	17 000	0,37	1,83	2,72	1,79	700	600	265
520	940	8	9 000	15 000	0,33	2,06	3,06	2,01	1 070	530	320

Spherical roller bearings

Cylindrical or tapered bore

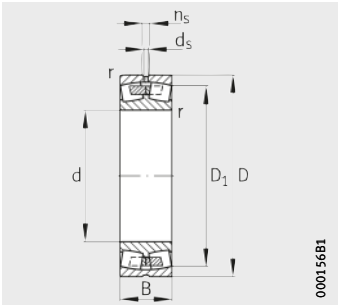

Design 2
With central rib
Cylindrical bore

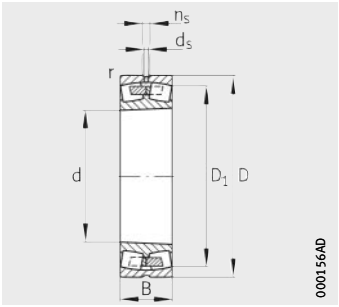

With central rib
K = taper 1:12
K30 = taper 1:30

Dimension table (continued) · Dimensions in mm

Designation	Design	Mass	Dimensions						
		m	d	D	B	r	D_1	d_s	n_s
		≈kg				min.	≈		
238/500-B-MB	2	60,7	**500**	620	90	3	586,2	6,3	12,2
238/500-B-MB	2	63,6	**500**	620	90	3	586,2	6,3	12,2
248/500-B-K30-MB	2	84,3	**500**	620	118	3	583,5	6,3	12,2
248/500-B-MB	2	84,3	**500**	620	118	3	583,5	6,3	12,2
239/500-K-MB	2	124	**500**	670	128	5	619,3	12,5	23,5
239/500-MB	2	132	**500**	670	128	5	619,3	12,5	23,5
Z-528741.PRL	2	167	**500**	670	170	5	616,8	8	15
249/500-K30-MB	2	172	**500**	670	170	5	616,5	8	15
249/500-MB	2	172	**500**	670	170	5	616,5	8	15
Z-541821.249/500	3	177	**500**	670	170	5	616,8	8	15
230/500-B-K-MB	2	219	**500**	720	167	6	653,5	12,5	23,5
230/500-B-MB	2	233	**500**	720	167	6	653,5	12,5	23,5
240/500-B-MB	2	297	**500**	720	218	6	645,8	12,5	23,5
240/500-B-K30-MB	2	384	**500**	720	218	6	645,8	12,5	23,5
231/500-B-K-MB	2	556	**500**	830	264	7,5	720,9	12,5	23,5
231/500-B-MB	2	602	**500**	830	264	7,5	720,9	12,5	23,5
241/500-B-MB	2	725	**500**	830	325	7,5	701,8	12,5	23,5
241/500-B-K30-MB	2	738	**500**	830	325	7,5	701,8	12,5	23,5
222/500-MB	2	712	**500**	920	243	7,5	798,1	12,5	23,5
232/500-K-MB	2	984	**500**	920	336	7,5	773,8	12,5	23,5
232/500-MB	2	1 010	**500**	920	336	7,5	773,8	12,5	23,5
223/500-MB	2	1 030	**500**	1 030	300	12	872,4	12,5	23,5
238/530-MB	2	67,8	**530**	650	90	3	616,4	6,3	12,2
238/530-K-MB	2	67,8	**530**	650	90	3	616,4	6,3	12,2
248/530-B-MB	2	89,7	**530**	650	118	3	614,1	6,3	12,2
248/530-B-K30-MB	2	89,7	**530**	650	118	3	614,1	6,3	12,2
239/530-K-MB	2	146	**530**	710	136	5	656,5	12,5	23,5
239/530-MB	2	160	**530**	710	136	5	656,5	12,5	23,5
Z-528742.PRL	2	208	**530**	710	180	5	653,2	9,5	17,7
249/530-B-K30-MB	2	208	**530**	710	180	5	653,2	9,5	17,7
249/530-B-MB	2	208	**530**	710	180	5	653,2	9,5	17,7
Z-541822.249/530	3	209	**530**	710	180	5	653,2	9,5	17,7
230/530-K-MB	2	291	**530**	780	185	6	703,7	12,5	23,5
230/530-MB	2	321	**530**	780	185	6	703,7	12,5	23,5
240/530-B-MB	2	415	**530**	780	250	6	691,9	12,5	23,5
240/530-B-K30-MB	2	418	**530**	780	250	6	691,9	12,5	23,5

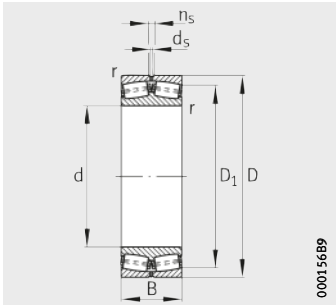

Design 3
Cylindrical bore with pin cage

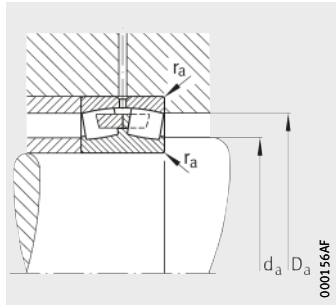

Design 2
Mounting dimensions

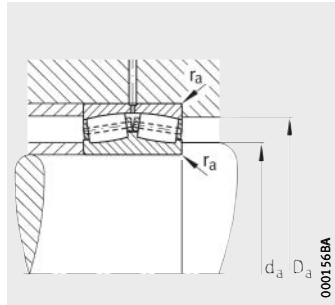

Design 3
Mounting dimensions

Mounting dimensions			Basic load ratings		Calculation factors				Fatigue limit load	Limiting speed	Reference speed
d_a	D_a	r_a	dyn. C_r	stat. C_{0r}	e	Y_1	Y_2	Y_0	C_{ur}	n_G	n_B
min.	max.	max.	kN	kN					kN	min^{-1}	min^{-1}
512,4	607,6	2,5	1 530	4 150	0,12	5,42	8,06	5,3	260	700	–
512,4	607,6	2,5	1 530	4 150	0,12	5,42	8,06	5,3	260	700	–
512,4	607,6	2,5	2 080	5 700	0,17	4	5,96	3,91	265	630	–
512,4	607,6	2,5	2 080	5 700	0,17	4	5,96	3,91	265	630	–
518	652	4	2 600	6 300	0,17	3,9	5,81	3,81	400	670	540
518	652	4	2 600	6 300	0,17	3,9	5,81	3,81	400	670	540
517	653	4	3 050	7 200	0,22	3,14	4,67	3,07	490	600	–
518	652	4	3 350	8 000	0,24	2,87	4,27	2,8	490	600	–
518	652	4	3 350	8 000	0,24	2,87	4,27	2,8	490	600	–
517	640	4	3 650	9 300	0,22	3,04	4,53	2,97	610	600	–
523	697	5	3 900	8 500	0,22	3,01	4,48	2,94	510	670	520
523	697	5	3 900	8 500	0,22	3,01	4,48	2,94	510	670	520
523	697	5	4 900	11 200	0,29	2,32	3,45	2,26	850	560	370
523	697	5	4 900	11 200	0,29	2,32	3,45	2,26	850	560	360
532	798	6	7 100	14 300	0,32	2,1	3,13	2,06	990	600	340
532	798	6	7 100	14 300	0,32	2,1	3,13	2,06	990	600	340
532	798	6	8 650	18 300	0,39	1,73	2,58	1,69	1 340	530	199
532	798	6	8 650	18 300	0,39	1,73	2,58	1,69	1 340	530	199
532	888	6	7 500	13 200	0,28	2,41	3,59	2,35	–	560	430
532	888	6	9 650	18 300	0,38	1,78	2,65	1,74	750	560	260
532	888	6	9 650	18 300	0,38	1,78	2,65	1,74	750	560	260
548	982	10	9 800	16 300	0,32	2,09	3,11	2,04	–	500	300
542	637,6	2,5	1 600	4 300	0,12	5,61	8,36	5,49	320	670	–
542	637,6	2,5	1 600	4 300	0,12	5,61	8,36	5,49	320	670	–
542,4	637,6	2,5	2 240	6 400	0,16	4,22	6,29	4,13	375	600	–
542,4	637,6	2,5	2 240	6 400	0,16	4,22	6,29	4,13	375	600	–
548	692	4	2 850	6 800	0,18	3,85	5,73	3,76	385	630	500
548	692	4	2 850	6 800	0,18	3,85	5,73	3,76	385	630	500
548	692	4	3 400	8 150	0,22	3,14	4,67	3,07	410	560	–
548	692	4	3 750	9 150	0,24	2,87	4,27	2,8	600	560	–
548	692	4	3 750	9 150	0,24	2,87	4,27	2,8	600	560	–
547	675	4	4 050	10 200	0,22	3,04	4,53	2,97	610	560	–
553	757	5	4 400	9 500	0,22	3,04	4,53	2,97	540	600	490
553	757	5	4 400	9 500	0,22	3,04	4,53	2,97	540	600	490
553	757	5	6 000	13 700	0,31	2,15	3,2	2,1	910	530	335
553	757	5	6 000	13 700	0,31	2,15	3,2	2,1	910	530	340

Spherical roller bearings

Cylindrical or tapered bore

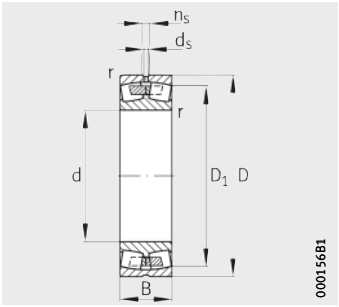

Design 2
With central rib
Cylindrical bore

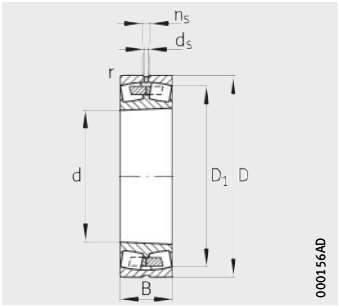

With central rib
K = taper 1:12
K30 = taper 1:30

Dimension table (continued) · Dimensions in mm

Designation	Design	Mass	Dimensions						
		m	d	D	B	r	D_1	d_s	n_s
		≈kg				min.	≈		
231/530-K-MB	2	643	**530**	870	272	7,5	756,3	12,5	23,5
241/530-B-K30-MB	2	845	**530**	870	335	7,5	739,1	12,5	23,5
241/530-B-MB	2	856	**530**	870	335	7,5	739,1	12,5	23,5
222/530-MB	2	845	**530**	980	258	9,5	850	12,5	23,5
232/530-MB	2	1 240	**530**	980	355	9,5	824,4	12,5	23,5
232/530-K-MB	2	1 200	**530**	980	355	9,5	824,4	12,5	23,5
223/530-MB	2	1 540	**530**	1 090	325	12	918,9	12,5	23,5
238/560-K-MB	2	68,5	**560**	680	90	3	646,7	6,3	12,2
238/560-MB	2	68,5	**560**	680	90	3	646,7	6,3	12,2
248/560-B-K30-MB	2	92,7	**560**	680	118	3	644,6	6,3	12,2
248/560-B-MB	2	92,7	**560**	680	118	3	644,6	6,3	12,2
239/560-B-K-MB	2	176	**560**	750	140	5	693,4	12,5	23,5
239/560-B-MB	2	181	**560**	750	140	5	693,4	12,5	23,5
Z-528743.PRL	2	235	**560**	750	190	6	690	12,5	23,5
249/560-K30-MB	2	246	**560**	750	190	5	690,2	9,5	17,7
249/560-MB	2	246	**560**	750	190	5	690,2	9,5	17,7
Z-541823.249/560	3	247	**560**	750	190	5	690,2	9,5	17,7
230/560-B-K-MB	2	339	**560**	820	195	6	741,5	12,5	23,5
230/560-B-MB	2	358	**560**	820	195	6	741,5	12,5	23,5
240/560-B-K30-MB	2	458	**560**	820	258	6	731,2	12,5	23,5
240/560-B-MB	2	472	**560**	820	258	6	731,2	12,5	23,5
231/560-K-MB	2	737	**560**	920	280	7,5	800,2	12,5	23,5
231/560-MB	2	760	**560**	920	280	7,5	800,2	12,5	23,5
241/560-B-K30-MB	2	974	**560**	920	355	7,5	785	12,5	23,5
241/560-B-MB	2	979	**560**	920	355	7,5	785	12,5	23,5
222/560-MB	2	1 060	**560**	1 030	272	9,5	891,7	12,5	23,5
232/560-K-MB	2	1 360	**560**	1 030	365	9,5	868,1	12,5	23,5
232/560-MB	2	1 400	**560**	1 030	365	9,5	868,1	12,5	23,5
223/560-MB	2	1 470	**560**	1 150	335	12	974,6	12,5	23,5
238/600-MB	2	86,2	**600**	730	98	3	696,3	6,3	12,2
238/600-K-MB	2	86,2	**600**	730	98	3	696,3	6,3	12,2
248/600-B-MB	2	116	**600**	730	128	3	691,5	6,3	12,2
248/600-B-K30-MB	2	116	**600**	730	128	3	691,5	6,3	12,2

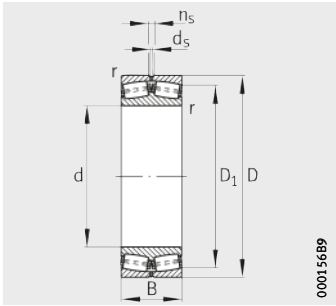

Design 3
Cylindrical bore with pin cage

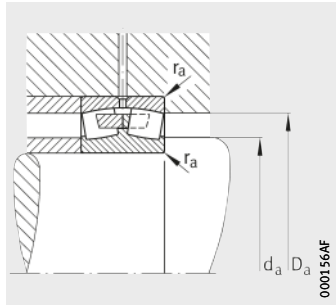

Design 2
Mounting dimensions

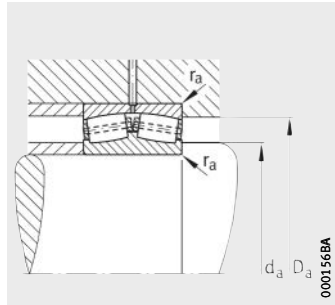

Design 3
Mounting dimensions

Mounting dimensions			Basic load ratings		Calculation factors				Fatigue limit load	Limiting speed	Reference speed
d_a	D_a	r_a	dyn. C_r	stat. C_{0r}	e	Y_1	Y_2	Y_0	C_{ur}	n_G	n_B
min.	max.	max.	kN	kN					kN	min^{-1}	min^{-1}
562	838	6	7 350	15 300	0,32	2,12	3,15	2,07	670	560	325
562	838	6	9 500	20 000	0,38	1,77	2,64	1,73	1 450	500	184
562	838	6	9 500	20 000	0,38	1,77	2,64	1,73	1 450	500	180
570	940	8	8 300	15 000	0,28	2,43	3,61	2,37	–	530	400
570	940	8	10 800	20 800	0,38	1,77	2,64	1,73	1 200	530	240
570	940	8	10 800	20 800	0,38	1,77	2,64	1,73	1 200	530	240
578	1 042	10	11 000	18 600	0,33	2,06	3,06	2,01	–	500	280
572,4	667,6	2,5	1 630	4 650	0,11	5,94	8,84	5,81	325	630	–
572,4	667,6	2,5	1 630	4 650	0,11	5,94	8,84	5,81	325	630	–
572,4	667,6	2,5	2 200	6 300	0,15	4,47	6,65	4,37	390	560	–
572,4	667,6	2,5	2 200	6 300	0,15	4,47	6,65	4,37	390	560	–
578	732	4	3 100	7 650	0,17	3,95	5,88	3,86	570	600	465
578	732	4	3 100	7 650	0,17	3,95	5,88	3,86	570	600	465
600	710	5	4 050	10 000	0,21	3,2	4,77	3,13	415	530	–
578	732	4	4 150	10 400	0,24	2,87	4,27	2,8	610	530	–
578	732	4	4 150	10 400	0,24	2,87	4,27	2,8	610	530	–
577	710	4	4 550	11 600	0,22	3,07	4,57	3	680	530	–
583	797	5	5 100	11 000	0,23	2,95	4,4	2,89	740	560	450
583	797	5	5 100	11 000	0,23	2,95	4,4	2,89	740	560	450
583	797	5	6 400	14 600	0,31	2,2	3,27	2,15	1 050	500	320
583	797	5	6 400	14 600	0,31	2,2	3,27	2,15	1 050	500	315
592	888	6	8 150	16 600	0,31	2,21	3,29	2,16	750	530	300
592	888	6	8 150	16 600	0,31	2,21	3,29	2,16	750	530	300
592	888	6	10 600	22 400	0,38	1,77	2,64	1,73	1 600	480	167
592	888	6	10 600	22 400	0,38	1,77	2,64	1,73	1 600	480	170
600	990	8	9 150	16 300	0,28	2,39	3,56	2,34	1 100	500	380
600	990	8	11 600	22 400	0,38	1,78	2,65	1,74	910	500	220
600	990	8	11 600	22 400	0,38	1,78	2,65	1,74	910	500	220
608	1 102	10	12 000	20 400	0,32	2,12	3,15	2,07	–	480	260
612,4	717,6	2,5	1 960	5 300	0,12	5,78	8,61	5,65	350	600	–
612,4	717,6	2,5	1 960	5 300	0,12	5,78	8,61	5,65	350	600	–
612,4	717,6	2,5	2 550	7 350	0,15	4,4	6,56	4,31	440	530	–
612,4	717,6	2,5	2 550	7 350	0,15	4,4	6,56	4,31	440	530	–

Spherical roller bearings

Cylindrical or tapered bore

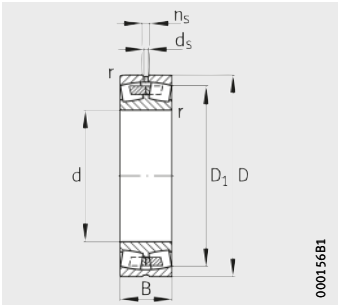

Design 2
With central rib
Cylindrical bore

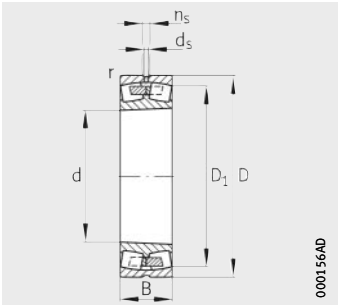

With central rib
K = taper 1:12
K30 = taper 1:30

Dimension table (continued) · Dimensions in mm

Designation	Design	Mass	Dimensions						
		m	d	D	B	r	D_1	d_s	n_s
		≈kg				min.	≈		
239/600-B-K-MB	2	210	**600**	800	150	5	740,5	12,5	23,5
239/600-B-MB	2	224	**600**	800	150	5	740,5	12,5	23,5
Z-528744.PRL	2	281	**600**	800	200	5	736,1	9,5	17,7
Z-541824.249/600-B	3	294	**600**	800	200	5	736,1	9,5	17,7
249/600-K30-MB	2	293	**600**	800	200	5	736,1	9,5	17,7
249/600-MB	2	293	**600**	800	200	5	736,1	9,5	17,7
230/600-B-K-MB	2	388	**600**	870	200	6	791,9	12,5	23,5
230/600-B-MB	2	409	**600**	870	200	6	791,9	12,5	23,5
240/600-B-K30-MB	2	544	**600**	870	272	6	773,3	12,5	23,5
240/600-B-MB	2	553	**600**	870	272	6	773,3	12,5	23,5
231/600-K-MB	2	901	**600**	980	300	7,5	852,6	12,5	23,5
231/600-MB	2	929	**600**	980	300	7,5	852,6	12,5	23,5
241/600-B-K30-MB	2	1 170	**600**	980	375	7,5	833	12,5	23,5
241/600-B-MB	2	1 180	**600**	980	375	7,5	833	12,5	23,5
222/600-MB	2	1 170	**600**	1 090	280	9,5	947,7	12,5	23,5
232/600-B-K-MB	2	1 560	**600**	1 090	388	9,5	919,5	12,5	23,5
232/600-B-MB	2	1 600	**600**	1 090	388	9,5	919,5	12,5	23,5
223/600-B-MB	2	2 060	**600**	1 220	355	15	1 036,1	12,5	23,5
223/600-MB	2	2 200	**600**	1 220	355	15	1 036,1	12,5	23,5
238/630-MB	2	122	**630**	780	112	4	736,8	8	15
238/630-K-MB	2	122	**630**	780	112	4	736,8	8	15
239/630-B-K-MB	2	283	**630**	850	165	6	784,5	12,5	23,5
239/630-B-MB	2	292	**630**	850	165	6	784,5	12,5	23,5
249/630-K30-MB	2	363	**630**	850	218	6	780,2	9,5	17,7
249/630-MB	2	363	**630**	850	218	6	780,2	9,5	17,7
Z-541825.249/630	3	375	**630**	850	218	6	780,2	9,5	17,7
230/630-B-K-MB	2	480	**630**	920	212	7,5	834,3	12,5	23,5
230/630-B-MB	2	495	**630**	920	212	7,5	834,3	12,5	23,5
240/630-B-K30-MB	2	649	**630**	920	290	7,5	817,9	12,5	23,5
240/630-B-MB	2	660	**630**	920	290	7,5	817,9	12,5	23,5
231/630-B-K-MB	2	1 040	**630**	1 030	315	7,5	896,2	12,5	23,5
231/630-B-MB	2	1 070	**630**	1 030	315	7,5	896,2	12,5	23,5
241/630-B-K30-MB	2	1 360	**630**	1 030	400	7,5	872,2	12,5	23,5
241/630-B-MB	2	1 390	**630**	1 030	400	7,5	872,2	12,5	23,5

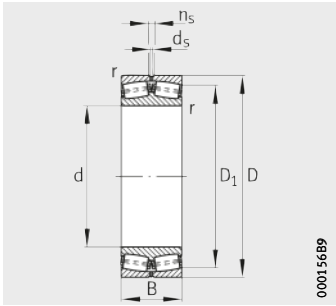

Design 3
Cylindrical bore with pin cage

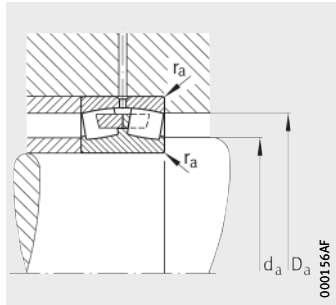

Design 2
Mounting dimensions

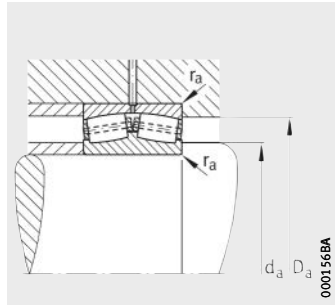

Design 3
Mounting dimensions

Mounting dimensions			Basic load ratings		Calculation factors				Fatigue limit load	Limiting speed	Reference speed
d_a	D_a	r_a	dyn. C_r	stat. C_{0r}	e	Y_1	Y_2	Y_0	C_{ur}	n_G	n_B
min.	max.	max.	kN	kN					kN	min^{-1}	min^{-1}
618	782	4	3 450	8 650	0,17	3,95	5,88	3,86	630	560	430
618	782	4	3 450	8 650	0,17	3,95	5,88	3,86	630	560	430
645	755	4	4 300	10 800	0,21	3,2	4,77	3,13	670	500	–
618	755	4	5 000	12 900	0,22	3,07	4,57	3	520	500	–
618	782	4	4 650	11 800	0,23	2,92	4,35	2,86	680	500	–
618	782	4	4 650	11 800	0,23	2,92	4,35	2,86	680	500	–
623	847	5	5 700	12 500	0,22	3,07	4,57	3	890	530	405
623	847	5	5 700	12 500	0,22	3,07	4,57	3	890	530	405
623	847	5	7 100	16 600	0,31	2,21	3,29	2,16	1 200	630	285
623	847	5	7 100	16 600	0,31	2,21	3,29	2,16	1 200	630	285
632	948	6	9 000	19 300	0,31	2,2	3,27	2,15	810	500	270
632	948	6	9 000	19 300	0,31	2,2	3,27	2,15	810	500	270
632	948	6	11 600	26 000	0,38	1,79	2,67	1,75	1 780	450	149
632	948	6	11 600	26 000	0,38	1,79	2,67	1,75	1 780	450	149
640	1 050	8	9 650	17 600	0,27	2,47	3,67	2,41	–	480	340
640	1 050	8	12 900	25 500	0,37	1,83	2,72	1,79	1 740	480	190
640	1 050	8	12 900	25 500	0,37	1,83	2,72	1,79	1 740	480	190
658	1 162	12	13 200	22 800	0,32	2,13	3,17	2,08	1 580	450	240
658	1 162	12	13 200	22 800	0,32	2,13	3,17	2,08	1 580	450	240
644,6	765,4	3	2 280	6 400	0,12	5,51	8,21	5,39	455	560	–
644,6	765,4	3	2 280	6 400	0,12	5,51	8,21	5,39	455	560	–
653	827	5	4 050	9 800	0,18	3,8	5,66	3,72	710	530	405
653	827	5	4 050	9 800	0,18	3,8	5,66	3,72	710	530	405
653	827	5	5 300	13 400	0,24	2,81	4,19	2,75	–	480	–
653	827	5	5 300	13 400	0,24	2,81	4,19	2,75	–	480	–
653	805	5	6 000	15 600	0,22	3,01	4,48	2,94	850	480	–
658	892	6	6 300	13 700	0,22	3,01	4,48	2,94	890	500	380
658	892	6	6 300	13 700	0,22	3,01	4,48	2,94	890	500	380
658	892	6	8 000	19 000	0,31	2,21	3,29	2,16	1 350	480	260
658	892	6	8 000	19 000	0,31	2,21	3,29	2,16	1 350	480	260
662	998	6	9 800	20 800	0,31	2,21	3,29	2,16	1 430	480	260
662	998	6	9 800	20 800	0,31	2,21	3,29	2,16	1 430	480	260
662	998	6	12 900	29 000	0,38	1,78	2,65	1,74	1 960	450	136
662	998	6	12 900	29 000	0,38	1,78	2,65	1,74	1 960	450	140

Spherical roller bearings

Cylindrical or tapered bore

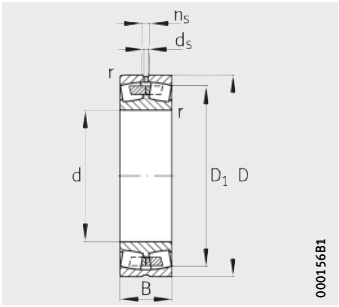

Design 2
With central rib
Cylindrical bore

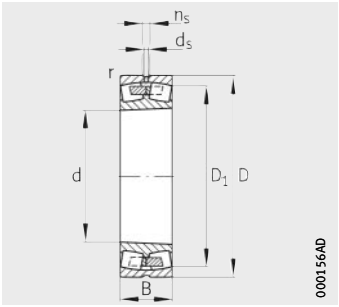

With central rib
K = taper 1:12
K30 = taper 1:30

Dimension table (continued) · Dimensions in mm

Designation	Design	Mass	Dimensions						
		m	d	D	B	r	D_1	d_s	n_s
		≈kg				min.	≈		
222/630-MB	2	1 420	**630**	1 150	300	12	998,2	12,5	23,5
232/630-B-K-MB	2	1 885	**630**	1 150	412	12	969,2	12,5	23,5
232/630-B-MB	2	1 940	**630**	1 150	412	12	969,2	12,5	23,5
238/670-B-MB	2	120	**670**	820	112	4	777,2	8	15
238/670-B-K-MB	2	120	**670**	820	112	4	777,2	8	15
248/670-B-K30-MB	2	175	**670**	820	150	4	775,2	8	15
248/670-B-MB	2	175	**670**	820	150	4	775,2	8	15
239/670-B-K-MB	2	310	**670**	900	170	6	831,5	12,5	23,5
239/670-B-MB	2	320	**670**	900	170	6	831,5	12,5	23,5
Z-528746.PRL	2	418	**670**	900	230	7,5	826,5	12,5	23,5
249/670-B-K30-MB	2	433	**670**	900	230	6	826,5	12,5	23,5
249/670-B-MB	2	433	**670**	900	230	6	826,5	12,5	23,5
Z-541826.249/670	3	435	**670**	900	230	6	826,5	12,5	23,5
230/670-B-K-MB	2	590	**670**	980	230	7,5	888,7	12,5	23,5
230/670-B-MB	2	600	**670**	980	230	7,5	888,7	12,5	23,5
240/670-B-K30-MB	2	794	**670**	980	308	7,5	873,1	12,5	23,5
240/670-B-MB	2	813	**670**	980	308	7,5	873,1	12,5	23,5
231/670-B-K-MB	2	1 240	**670**	1 090	336	7,5	948,2	12,5	23,5
241/670-B-K30-MB	2	1 540	**670**	1 090	412	7,5	929,4	12,5	23,5
241/670-B-MB	2	1 540	**670**	1 090	412	7,5	929,4	12,5	23,5
F-804529.PRL	2, K30	1 660	**670**	1 090	445	2,8/7,5[1)]	913,8	12,5	23,5
222/670-MB	2	1 730	**670**	1 220	315	12	1 061	12,5	23,5
232/670-B-K-MB	2	2 240	**670**	1 220	438	12	1 030,5	12,5	23,5
232/670-B-MB	2	2 320	**670**	1 220	438	12	1 030,5	12,5	23,5
238/710-K-MB	2	139	**710**	870	118	4	824,9	8	15
238/710-MB	2	154	**710**	870	118	4	824,9	8	15
248/710-B-MB	2	215	**710**	870	160	4	821,2	8	15
248/710-B-K30-MB	2	218	**710**	870	160	4	821,2	8	15
239/710-K-MB	2	336	**710**	950	180	6	877,5	12,5	23,5
239/710-MB	2	355	**710**	950	180	6	877,5	12,5	23,5
Z-528747.PRL	2	491	**710**	950	243	6	871,7	12,5	23,5
249/710-B-MB	2	494	**710**	950	243	6	871,7	12,5	23,5
249/710-B-K30-MB	2	505	**710**	950	243	6	871,7	12,5	23,5
Z-541827.249/710-B	3	526	**710**	950	243	6	871,7	12,5	23,5

1) Chamfer dimension on inner ring = 2,8 mm, chamfer dimension on outer ring = 7,5 mm.

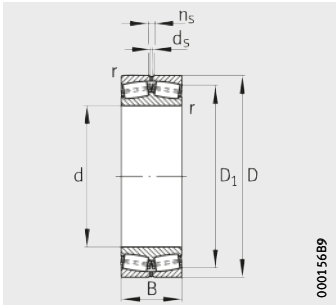

Design 3
Cylindrical bore with pin cage

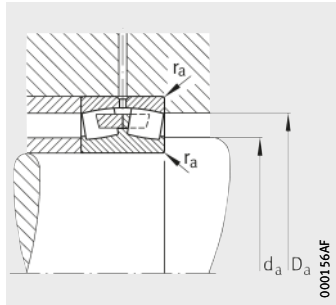

Design 2
Mounting dimensions

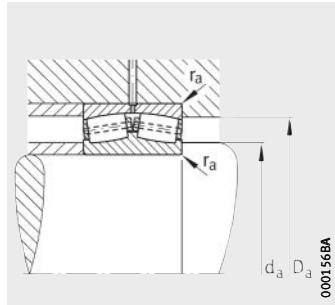

Design 3
Mounting dimensions

Mounting dimensions			Basic load ratings		Calculation factors				Fatigue limit load	Limiting speed	Reference speed
d_a	D_a	r_a	dyn. C_r	stat. C_{0r}	e	Y_1	Y_2	Y_0	C_{ur}	n_G	n_B
min.	max.	max.	kN	kN					kN	min^{-1}	min^{-1}
678	1 102	10	11 000	20 000	0,28	2,43	3,61	2,37	1 320	450	320
678	1 102	10	14 300	28 500	0,37	1,8	2,69	1,76	1 370	450	180
678	1 102	10	14 300	28 500	0,37	1,8	2,69	1,76	1 370	450	180
684,6	805,4	3	2 360	6 950	0,12	5,72	8,51	5,59	445	530	–
684,6	805,4	3	2 360	6 950	0,12	5,72	8,51	5,59	445	530	–
684,6	805,4	3	3 350	9 800	0,16	4,22	6,29	4,13	590	480	–
684,6	805,4	3	3 350	9 800	0,16	4,22	6,29	4,13	590	480	–
693	877	5	4 300	10 600	0,17	3,95	5,88	3,86	750	500	375
693	877	5	4 300	10 600	0,17	3,95	5,88	3,86	750	500	375
720	850	6	5 500	13 700	0,22	3,1	4,62	3,03	620	450	–
693	877	5	5 850	15 000	0,24	2,81	4,19	2,75	940	450	–
693	877	5	5 850	15 000	0,24	2,81	4,19	2,75	940	450	–
693	850	5	6 550	17 000	0,22	3,04	4,53	2,97	690	450	–
698	952	6	7 200	16 000	0,22	3,01	4,48	2,94	1 100	480	350
698	952	6	7 200	16 000	0,22	3,01	4,48	2,94	1 100	480	350
698	952	6	9 000	21 600	0,31	2,2	3,27	2,15	1 460	450	240
698	952	6	9 000	21 600	0,31	2,2	3,27	2,15	1 460	450	240
702	1 058	6	11 000	24 000	0,31	2,21	3,29	2,16	1 560	450	220
702	1 058	6	14 000	31 500	0,37	1,83	2,72	1,79	2 110	430	127
702	1 058	6	14 000	31 500	0,37	1,83	2,72	1,79	2 110	430	130
682,4	1 058	2,5/6	14 300	32 500	0,36	1,86	2,77	1,82	2 130	430	–
718	1 172	10	12 200	22 400	0,27	2,47	3,67	2,41	–	430	300
718	1 172	10	16 300	32 500	0,37	1,8	2,69	1,76	2 150	430	160
718	1 172	10	16 300	32 500	0,37	1,8	2,69	1,76	2 150	430	160
724,6	855,4	3	2 600	7 500	0,12	5,72	8,51	5,59	540	500	–
724,6	855,4	3	2 600	7 500	0,12	5,72	8,51	5,59	540	500	–
725	855	3	3 750	11 000	0,16	4,22	6,29	4,13	780	450	–
725	855	3	3 750	11 000	0,16	4,22	6,29	4,13	780	450	–
733	927	5	4 800	12 000	0,18	3,85	5,73	3,76	720	480	350
733	927	5	4 800	12 000	0,18	3,85	5,73	3,76	720	480	350
760	900	5	6 200	15 600	0,22	3,14	4,67	3,07	630	450	–
733	927	5	6 550	17 000	0,24	2,81	4,19	2,75	1 040	450	–
733	927	5	6 550	17 000	0,24	2,81	4,19	2,75	1 040	450	–
733	900	5	6 800	18 000	0,22	3,04	4,53	2,97	1 290	450	–

Spherical roller bearings

Cylindrical or tapered bore

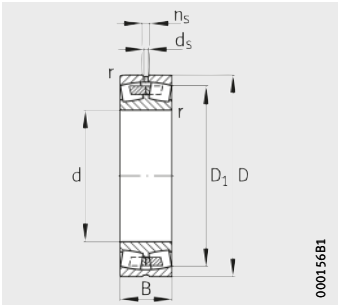

Design 2
With central rib
Cylindrical bore

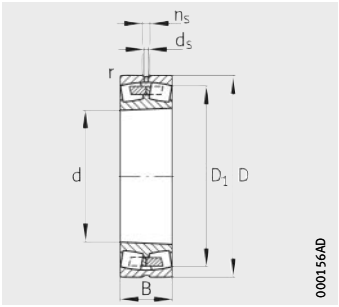

With central rib
K = taper 1:12
K30 = taper 1:30

Dimension table (continued) · Dimensions in mm

Designation	Design	Mass	Dimensions						
		m	d	D	B	r	D_1	d_s	n_s
		≈kg				min.	≈		
230/710-B-K-MB	2	650	**710**	1 030	236	7,5	938,8	12,5	23,5
230/710-B-MB	2	674	**710**	1 030	236	7,5	938,8	12,5	23,5
240/710-B-K30-MB	2	873	**710**	1 030	315	7,5	921,6	12,5	23,5
240/710-B-MB	2	903	**710**	1 030	315	7,5	921,6	12,5	23,5
231/710-B-K-MB	2	1 420	**710**	1 150	345	9,5	1 006,6	12,5	23,5
231/710-B-MB	2	1 450	**710**	1 150	345	9,5	1 006,6	12,5	23,5
241/710-B-K30-MB	2	1 790	**710**	1 150	438	9,5	980,2	12,5	23,5
241/710-B-MB	2	1 820	**710**	1 150	438	9,5	980,2	12,5	23,5
222/710-MB	2	1 910	**710**	1 280	325	12	1 116,4	12,5	23,5
232/710-B-MB	2	2 620	**710**	1 280	450	12	1 088,4	12,5	23,5
232/710-B-K-MB	2	2 550	**710**	1 280	450	12	1 088,4	12,5	23,5
238/750-B-K-MB	2	188	**750**	920	128	5	872,1	8	15
238/750-B-MB	2	188	**750**	920	128	5	872,1	8	15
248/750-B-K30-MB	2	254	**750**	920	170	5	868,2	8	15
248/750-B-MB	2	254	**750**	920	170	5	868,2	8	15
239/750-K-MB	2	394	**750**	1 000	185	6	923,2	12,5	23,5
239/750-MB	2	426	**750**	1 000	185	6	923,2	12,5	23,5
F-801006.PRL	2	547	**750**	1 000	250	6	921,7	12,5	23,5
Z-528748.PRL	2	549	**750**	1 000	250	6	921,8	12,5	23,5
Z-541828.249/750-B	3	572	**750**	1 000	250	6	920	12,5	23,5
249/750-B-K30-MB	2	558	**750**	1 000	250	6	921,7	12,5	23,5
249/750-B-MB	2	571	**750**	1 000	250	6	921,7	12,5	23,5
230/750-K-MB	2	786	**750**	1 090	250	7,5	990,9	12,5	23,5
230/750-MB	2	806	**750**	1 090	250	7,5	990,9	12,5	23,5
240/750-B-MB	2	1 060	**750**	1 090	335	7,5	976,2	12,5	23,5
240/750-B-K30-MB	2	1 070	**750**	1 090	335	7,5	976,2	12,5	23,5
231/750-B-K-MB	2	1 670	**750**	1 220	365	9,5	1 067,4	12,5	23,5
231/750-B-MB	2	1 720	**750**	1 220	365	9,5	1 067,4	12,5	23,5
241/750-B-MB	2	2 280	**750**	1 220	475	9,5	1 035,8	12,5	23,5
241/750-B-K30-MB	2	2 300	**750**	1 220	475	9,5	1 035,8	12,5	23,5
222/750-MB	2	2 240	**750**	1 360	345	15	1 185,6	12,5	23,5
232/750-B-K-MB	2	3 050	**750**	1 360	475	15	1 154,1	12,5	23,5
232/750-B-MB	2	3 140	**750**	1 360	475	15	1 154,1	12,5	23,5

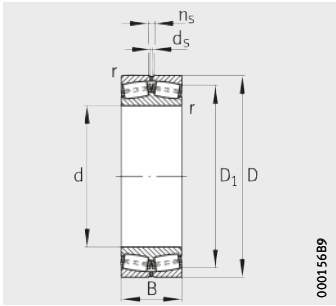

Design 3
Cylindrical bore with pin cage

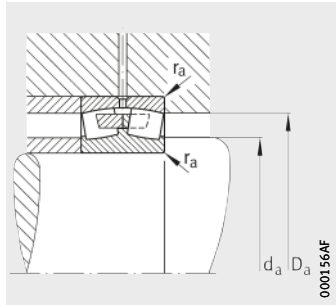

Design 2
Mounting dimensions

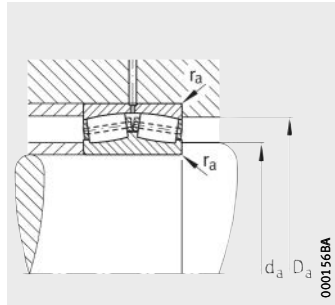

Design 3
Mounting dimensions

Mounting dimensions			Basic load ratings		Calculation factors				Fatigue limit load	Limiting speed	Reference speed
d_a	D_a	r_a	dyn. C_r	stat. C_{0r}	e	Y_1	Y_2	Y_0	C_{ur}	n_G	n_B
min.	max.	max.	kN	kN					kN	min^{-1}	min^{-1}
738	1 002	6	7 650	17 000	0,22	3,07	4,57	3	1 140	480	325
738	1 002	6	7 650	17 000	0,22	3,07	4,57	3	1 140	480	325
738	1 002	6	9 500	22 800	0,3	2,26	3,37	2,21	1 550	430	223
738	1 002	6	9 500	22 800	0,3	2,26	3,37	2,21	1 550	430	220
750	1 110	8	12 500	27 000	0,3	2,25	3,34	2,2	1 810	450	200
750	1 110	8	12 500	27 000	0,3	2,25	3,34	2,2	1 810	450	200
750	1 110	8	15 600	35 500	0,38	1,79	2,67	1,75	2 340	400	116
750	1 110	8	15 600	35 500	0,38	1,79	2,67	1,75	2 340	400	116
758	1 232	10	13 700	25 000	0,27	2,49	3,71	2,43	–	430	280
758	1 232	10	17 300	35 500	0,37	1,83	2,72	1,79	2 300	430	150
758	1 232	10	17 300	35 500	0,37	1,83	2,72	1,79	2 300	430	150
768	902	4	3 000	8 650	0,12	5,61	8,36	5,49	600	480	–
768	902	4	3 000	8 650	0,12	5,61	8,36	5,49	600	480	–
768	902	4	4 150	12 500	0,16	4,11	6,12	4,02	740	450	–
768	902	4	4 150	12 500	0,16	4,11	6,12	4,02	740	450	–
773	977	5	5 200	12 900	0,17	3,95	5,88	3,86	790	480	325
773	977	5	5 200	12 900	0,17	3,95	5,88	3,86	790	480	325
773	977	5	6 700	17 000	0,21	3,2	4,77	3,13	660	430	–
800	950	5	6 700	17 000	0,21	3,2	4,77	3,13	660	430	–
773	977	5	6 950	19 600	0,2	3,31	4,92	3,23	750	430	–
773	977	5	7 200	19 000	0,22	3,1	4,62	3,03	1 180	430	–
773	977	5	7 200	19 000	0,22	3,1	4,62	3,03	1 180	430	–
778	1 062	6	8 500	19 000	0,22	3,01	4,48	2,94	1 010	450	305
778	1 062	6	8 500	19 000	0,22	3,01	4,48	2,94	1 010	450	305
778	1 062	6	10 800	26 000	0,3	2,26	3,37	2,21	1 730	400	200
778	1 062	6	10 800	26 000	0,3	2,26	3,37	2,21	1 730	400	204
790	1 180	8	14 000	30 500	0,29	2,3	3,42	2,25	1 990	430	190
790	1 180	8	14 000	30 500	0,29	2,3	3,42	2,25	1 990	430	190
790	1 180	8	18 000	40 500	0,38	1,76	2,62	1,72	2 600	300	110
790	1 180	8	18 000	40 500	0,38	1,76	2,62	1,72	2 600	300	110
808	1 302	12	14 600	27 000	0,27	2,49	3,71	2,43	–	400	260
808	1 302	12	19 300	40 000	0,37	1,83	2,72	1,79	2 550	400	140
808	1 302	12	19 300	40 000	0,37	1,83	2,72	1,79	2 550	400	140

Spherical roller bearings

Cylindrical or tapered bore

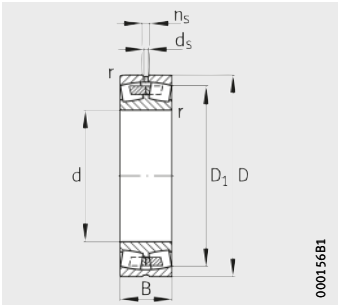

Design 2
With central rib
Cylindrical bore

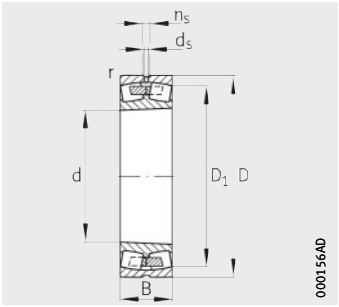

With central rib
K = taper 1:12
K30 = taper 1:30

Dimension table (continued) · Dimensions in mm

Designation	Design	Mass	Dimensions						
		m	d	D	B	r	D_1	d_s	n_s
		≈kg				min.	≈		
238/800-B-K-MB	2	226	**800**	980	136	5	927,6	8	15
238/800-B-MB	2	226	**800**	980	136	5	927,6	8	15
248/800-B-MB	2	301	**800**	980	180	5	925,4	8	15
248/800-B-K30-MB	2	399	**800**	980	180	5	925,4	8	15
239/800-B-K-MB	2	490	**800**	1 060	195	6	983,7	12,5	23,5
239/800-B-MB	2	506	**800**	1 060	195	6	983,7	12,5	23,5
Z-528749.PRL	2	621	**800**	1 060	258	12/7,5[1]	978,6	12	23,5
249/800-B-K30-MB	2	650	**800**	1 060	258	6	978,6	12,5	23,5
249/800-B-MB	2	650	**800**	1 060	258	6	978,6	12,5	23,5
Z-541829.249/800-B	3	646	**800**	1 060	258	7,5	976,5	12,5	23,5
230/800-K-MB	2	861	**800**	1 150	258	7,5	1 050,9	12,5	23,5
230/800-MB	2	899	**800**	1 150	258	7,5	1 050,9	12,5	23,5
240/800-B-K30-MB	2	1 190	**800**	1 150	345	7,5	1 034,1	12,5	23,5
240/800-B-MB	2	1 200	**800**	1 150	345	7,5	1 034,1	12,5	23,5
231/800-MB	2	1 970	**800**	1 280	375	9,5	1 119,1	12,5	23,5
231/800-K-MB	2	2 400	**800**	1 280	375	9,5	1 119,1	12,5	23,5
241/800-B-K30-MB	2	2 530	**800**	1 280	475	9,5	1 099,5	12,5	23,5
241/800-B-MB	2	2 530	**800**	1 280	475	9,5	1 099,5	12,5	23,5
F-804530.PRL	2, K30	2 550	**800**	1 280	511	3,3/9,5[2]	1 083	12,5	23,5
232/800-B-MB	2	3 380	**800**	1 420	488	15	1 211,4	12,5	23,5
238/850-K-MB	2	238	**850**	1 030	136	5	978,1	8	15
238/850-MB	2	238	**850**	1 030	136	5	978,1	8	15
239/850-K-MB	2	554	**850**	1 120	200	6	1 039,9	12,5	23,5
239/850-MB	2	579	**850**	1 120	200	6	1 039,9	12,5	23,5
Z-528750.PRL	2	719	**850**	1 120	272	6	1 034	12,5	23,5
Z-541830.249/850-B	3	695	**850**	1 120	272	6	1 033,9	12,5	23,5
249/850-B-MB	2	756	**850**	1 120	272	6	1 033,9	12,5	23,5
249/850-B-K30-MB	2	760	**850**	1 120	272	6	1 033,9	12,5	23,5
230/850-B-K-MB	2	1 060	**850**	1 220	272	7,5	1 113,5	12,5	23,5
230/850-B-MB	2	1 090	**850**	1 220	272	7,5	1 113,5	12,5	23,5
240/850-B-K30-MB	2	1 420	**850**	1 220	365	7,5	1 092,9	12,5	23,5
240/850-B-MB	2	1 440	**850**	1 220	365	7,5	1 092,9	12,5	23,5

[1] Chamfer dimension on inner ring = 12 mm, chamfer dimension on outer ring = 7,5 mm.

[2] Chamfer dimension on inner ring = 3,3 mm, chamfer dimension on outer ring = 9,5 mm.

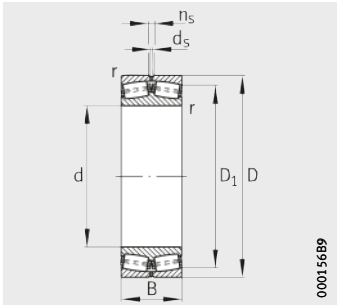

Design 3
Cylindrical bore with pin cage

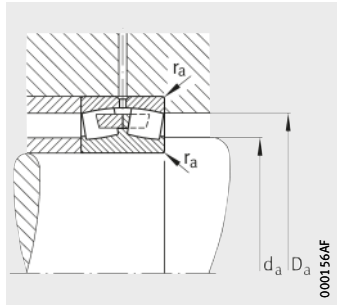

Design 2
Mounting dimensions

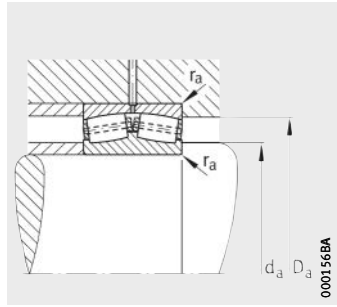

Design 3
Mounting dimensions

Mounting dimensions			Basic load ratings		Calculation factors				Fatigue limit load	Limiting speed	Reference speed
d_a	D_a	r_a	dyn. C_r	stat. C_{0r}	e	Y_1	Y_2	Y_0	C_{ur}	n_G	n_B
min.	max.	max.	kN	kN					kN	min^{-1}	min^{-1}
818	962	4	3 400	10 000	0,12	5,72	8,51	5,59	680	450	–
818	962	4	3 400	10 000	0,12	5,72	8,51	5,59	680	450	–
818	962	4	4 650	14 000	0,16	4,11	6,12	4,02	840	430	–
818	962	4	4 650	14 000	0,16	4,11	6,12	4,02	840	430	–
823	1 037	5	5 850	15 000	0,17	4,05	6,04	3,96	1 010	450	295
823	1 037	5	5 850	15 000	0,17	4,05	6,04	3,96	1 010	450	295
860	1 010	10/6	7 200	18 600	0,2	3,31	4,92	3,23	1 160	400	–
823	1 037	5	7 650	20 400	0,23	2,98	4,44	2,92	1 340	400	–
823	1 037	5	7 650	20 400	0,23	2,98	4,44	2,92	1 340	400	–
823	1 010	6	8 300	22 800	0,21	3,17	4,72	3,1	800	400	–
828	1 122	6	9 300	21 200	0,22	3,07	4,57	3	1 430	430	280
828	1 122	6	9 300	21 200	0,22	3,07	4,57	3	1 430	430	280
828	1 122	6	11 600	28 500	0,29	2,33	3,47	2,28	1 810	360	190
828	1 122	6	11 600	28 500	0,29	2,33	3,47	2,28	1 810	360	188
840	1 240	8	15 000	33 500	0,29	2,32	3,45	2,26	1 680	400	170
840	1 240	8	15 000	33 500	0,29	2,32	3,45	2,26	1 680	400	170
840	1 240	8	18 600	44 000	0,36	1,86	2,77	1,82	2 430	340	95
840	1 240	8	18 600	44 000	0,36	1,86	2,77	1,82	2 430	340	95
814,6	1 240	3/8	19 300	45 500	0,36	1,86	2,77	1,82	2 900	340	–
858	1 362	12	20 000	41 500	0,36	1,87	2,79	1,83	1 940	360	130
868	1 012	4	3 550	10 600	0,11	6,06	9,02	5,92	710	450	–
868	1 012	4	3 550	10 600	0,11	6,06	9,02	5,92	710	450	–
873	1 097	5	6 300	16 300	0,16	4,11	6,12	4,02	960	430	275
873	1 097	5	6 300	16 300	0,16	4,11	6,12	4,02	960	430	275
910	1 070	5	7 800	20 400	0,21	3,27	4,87	3,2	740	360	–
873	1 070	5	8 300	22 400	0,21	3,27	4,87	3,2	740	670	–
873	1 097	5	8 300	22 400	0,23	2,98	4,44	2,92	1 380	360	–
873	1 097	5	8 300	22 400	0,23	2,98	4,44	2,92	1 380	360	–
878	1 192	6	10 400	23 600	0,22	3,07	4,57	3	1 540	400	260
878	1 192	6	10 400	23 600	0,22	3,07	4,57	3	1 540	400	260
878	1 192	6	12 900	32 000	0,29	2,33	3,47	2,28	2 060	480	173
878	1 192	6	12 900	32 000	0,29	2,33	3,47	2,28	2 060	480	170

Spherical roller bearings

Cylindrical or tapered bore

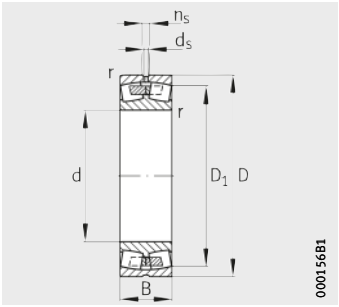

Design 2
With central rib
Cylindrical bore

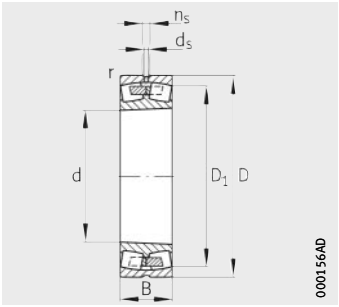

With central rib
K = taper 1:12
K30 = taper 1:30

Dimension table (continued) · Dimensions in mm

Designation	Design	Mass	Dimensions						
		m	d	D	B	r	D_1	d_s	n_s
		≈kg				min.	≈		
231/850-B-K-MB	2	2 400	**850**	1 360	400	12	1 198,1	12,5	23,5
231/850-B-MB	2	2 400	**850**	1 360	400	12	1 198,1	12,5	23,5
241/850-B-K30-MB	2	2 840	**850**	1 360	500	12	1 171,7	12,5	23,5
241/850-B-MB	2	2 950	**850**	1 360	500	12	1 171,7	12,5	23,5
232/850-B-MB	2	3 920	**850**	1 500	515	15	1 277,2	12,5	23,5
238/900-B-K-MB	2	274	**900**	1 090	140	5	1 036,1	8	15
238/900-B-MB	2	274	**900**	1 090	140	5	1 036,1	8	15
248/900-B-K30-MB	2	248	**900**	1 090	190	5	1 030,5	8	15
248/900-B-MB	2	382	**900**	1 090	190	5	1 030,5	8	15
239/900-K-MB	2	641	**900**	1 180	206	6	1 098,8	12,5	23,5
239/900-MB	2	653	**900**	1 180	206	6	1 098,8	12,5	23,5
Z-528751.PRL	2	816	**900**	1 180	280	9,5/6[1)]	1 090,6	12,5	23,5
249/900-K30-MB	2	831	**900**	1 180	280	6	1 088,6	12,5	23,5
249/900-MB	2	831	**900**	1 180	280	6	1 088,6	12,5	23,5
Z-541831.249/900-B	3	849	**900**	1 180	280	6	1 090,9	12,5	23,5
230/900-B-K-MB	2	1 280	**900**	1 280	280	7,5	1 171,3	12,5	23,5
230/900-B-MB	2	1 280	**900**	1 280	280	7,5	1 171,3	12,5	23,5
240/900-B-K30-MB	2	1 570	**900**	1 280	375	7,5	1 150,7	12,5	23,5
240/900-B-MB	2	1 590	**900**	1 280	375	7,5	1 150,7	12,5	23,5
231/900-B-K-MB	2	2 570	**900**	1 420	412	12	1 252,4	12,5	23,5
231/900-B-MB	2	2 570	**900**	1 420	412	12	1 252,4	12,5	23,5
241/900-B-K30-MB	2	3 040	**900**	1 420	515	12	1 230,4	12,5	23,5
241/900-B-MB	2	3 200	**900**	1 420	515	12	1 230,4	12,5	23,5
F-807608.PRL	2, K30	3 340	**900**	1 420	550	9,5	1 211	12,5	23,5
238/950-B-K-MB	2	335	**950**	1 150	150	5	1 092,8	8	15
238/950-B-MB	2	335	**950**	1 150	150	5	1 092,8	8	15
239/950-B-K-MB	2	746	**950**	1 250	224	7,5	1 162,5	12,5	23,5
Z-528752.PRL	2	1 000	**950**	1 250	300	7,5	1 152,6	12,5	23,5
249/950-B-K30-MB	2	1 030	**950**	1 250	300	7,5	1 155	12,5	23,5
249/950-B-MB	2	1 030	**950**	1 250	300	7,5	1 155	12,5	23,5
Z-541832.249/950-B	3	1 040	**950**	1 250	300	7,5	1 155	12,5	23,5
240/950-B-K30-MB	2	1 970	**950**	1 360	412	7,5	1 216	12,5	23,5
240/950-B-MB	2	2 010	**950**	1 360	412	7,5	1 216	12,5	23,5

[1)] Chamfer dimension on inner ring = 9,5 mm, chamfer dimension on outer ring = 6 mm.

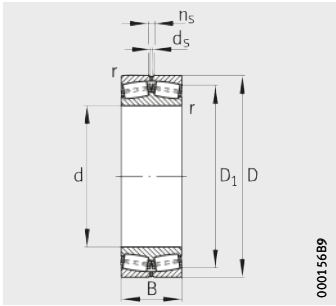

Design 3
Cylindrical bore with pin cage

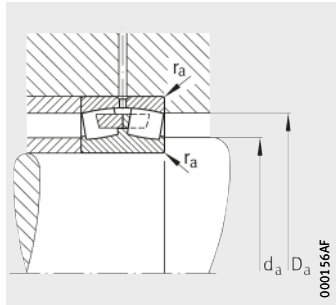

Design 2
Mounting dimensions

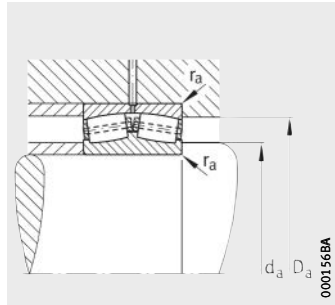

Design 3
Mounting dimensions

Mounting dimensions			Basic load ratings		Calculation factors				Fatigue limit load	Limiting speed	Reference speed
d_a	D_a	r_a	dyn. C_r	stat. C_{0r}	e	Y_1	Y_2	Y_0	C_{ur}	n_G	n_B
min.	max.	max.	kN	kN					kN	min^{-1}	min^{-1}
898	1 312	10	17 000	38 000	0,29	2,32	3,45	2,26	2 410	360	160
898	1 312	10	17 000	38 000	0,29	2,32	3,45	2,26	2 410	360	160
898	1 312	10	21 200	49 000	0,36	1,89	2,81	1,84	3 150	300	90
898	1 312	10	21 200	49 000	0,36	1,89	2,81	1,84	3 150	300	90
908	1 442	12	22 000	47 500	0,35	1,92	2,86	1,88	2 950	340	120
918	1 072	4	2 200	5 700	0,11	6,06	9,02	5,92	375	430	–
918	1 072	4	2 200	5 700	0,11	6,06	9,02	5,92	375	430	–
918	1 072	4	5 200	16 600	0,15	4,4	6,56	4,31	970	360	–
918	1 072	4	5 200	16 600	0,15	4,4	6,56	4,31	970	360	–
923	1 157	5	6 550	17 300	0,16	4,28	6,37	4,19	1 010	400	260
923	1 157	5	6 550	17 300	0,16	4,28	6,37	4,19	1 010	400	260
960	1 120	8/5	8 500	22 400	0,2	3,38	5,03	3,3	820	340	–
923	1 157	5	9 150	25 000	0,2	3,31	4,92	3,23	1 070	340	–
923	1 157	5	9 150	25 000	0,2	3,31	4,92	3,23	1 070	340	–
923	1 157	5	9 500	27 000	0,2	3,42	5,09	3,34	890	340	–
928	1 252	6	11 000	26 500	0,22	3,14	4,67	3,07	1 620	400	240
928	1 252	6	11 000	26 500	0,22	3,14	4,67	3,07	1 620	400	240
928	1 252	6	14 000	36 500	0,28	2,45	3,64	2,39	2 190	300	150
928	1 252	6	14 000	36 500	0,28	2,45	3,64	2,39	2 190	300	150
948	1 372	10	18 000	40 500	0,29	2,33	3,47	2,28	2 550	340	150
948	1 372	10	18 000	40 500	0,29	2,33	3,47	2,28	2 550	340	150
948	1 372	10	22 400	53 000	0,35	1,91	2,85	1,87	2 900	280	80
948	1 372	10	22 400	53 000	0,35	1,91	2,85	1,87	2 900	280	80
940	1 380	7,5	22 800	55 000	0,35	1,91	2,85	1,87	3 450	430	–
968	1 132	4	4 150	12 900	0,11	6,06	9,02	5,92	–	400	–
968	1 132	4	4 150	12 900	0,11	6,06	9,02	5,92	–	400	–
978	1 222	6	7 500	20 000	0,16	4,22	6,29	4,13	1 280	360	240
1 015	1 190	6	9 500	25 500	0,21	3,27	4,87	3,2	980	260	–
978	1 222	6	10 200	28 500	0,22	3,01	4,48	2,94	1 730	300	–
978	1 222	6	10 200	28 500	0,22	3,01	4,48	2,94	1 730	300	–
978	1 190	6	10 600	29 000	0,2	3,38	5,03	3,3	1 050	300	–
978	1 332	6	16 300	41 500	0,29	2,32	3,45	2,26	2 550	280	140
978	1 332	6	16 300	41 500	0,29	2,32	3,45	2,26	2 550	280	140

Spherical roller bearings

Cylindrical or tapered bore

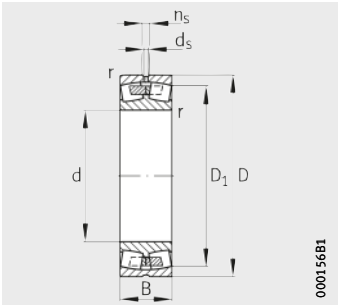

Design 2
With central rib
Cylindrical bore

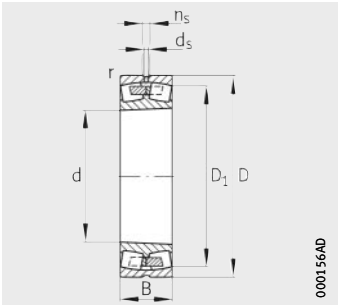

With central rib
K = taper 1:12
K30 = taper 1:30

Dimension table (continued) · Dimensions in mm

Designation	Design	Mass	Dimensions						
		m	d	D	B	r	D_1	d_s	n_s
		≈kg				min.	≈		
231/950-B-K-MB	2	3 060	**950**	1 500	438	12	1 322,5	12,5	23,5
231/950-B-MB	2	3 060	**950**	1 500	438	12	1 322,5	12,5	23,5
241/950-B-K30-MB	2	3 820	**950**	1 500	545	12	1 306,7	12,5	23,5
241/950-B-MB	2	3 820	**950**	1 500	545	12	1 306,7	12,5	23,5
238/1000-MB	2	425	**1 000**	1 220	165	6	1 158	9,5	17,7
238/1000-K-MB	2	425	**1 000**	1 220	165	6	1 158	9,5	17,7
248/1000-B-MB	2	535	**1 000**	1 220	218	6	1 151,4	9,5	17,7
248/1000-B-K30-MB	2	535	**1 000**	1 220	218	6	1 151,4	9,5	17,7
239/1000-K-MB	2	898	**1 000**	1 320	236	7,5	1 227,4	12,5	23,5
239/1000-MB	2	898	**1 000**	1 320	236	7,5	1 227,4	12,5	23,5
Z-528753.PRL	2	1 120	**1 000**	1 320	315	7,5	1 218,4	12,5	23,5
249/1000-B-MB	2	1 220	**1 000**	1 320	315	7,5	1 218,4	12,5	23,5
249/1000-B-K30-MB	2	1 210	**1 000**	1 320	315	7,5	1 218,4	12,5	23,5
Z-541833.249/1000	3	1 230	**1 000**	1 320	315	7,5	1 218,4	12,5	23,5
230/1000-B-K-MB	2	1 590	**1 000**	1 420	308	7,5	1 300,3	12,5	23,5
230/1000-B-MB	2	1 590	**1 000**	1 420	308	7,5	1 300,3	12,5	23,5
240/1000-B-K30-MB	2	2 070	**1 000**	1 420	412	7,5	1 278,3	12,5	23,5
240/1000-B-MB	2	2 110	**1 000**	1 420	412	7,5	1 278,3	12,5	23,5
231/1000-B-MB	2	3 470	**1 000**	1 580	462	12	1 391,8	12,5	23,5
231/1000-K-MB	2	3 470	**1 000**	1 580	462	12	1 391,8	12,5	23,5
241/1000-B-K30-MB	2	4 380	**1 000**	1 580	580	12	1 372,6	12,5	23,5
241/1000-B-MB	2	4 430	**1 000**	1 580	580	12	1 372,6	12,5	23,5
F-809143.02.PRL	2, K30	4 540	**1 059**	1 620	615	15	1 396	12,5	23,5
238/1060-B-K-MB	2	444	**1 060**	1 280	165	6	1 218,2	9,5	17,7
238/1060-B-MB	2	444	**1 060**	1 280	165	6	1 218,2	9,5	17,7
248/1060-B-K30-MB	2	599	**1 060**	1 280	218	6	1 212,7	9,5	17,7
248/1060-B-MB	2	599	**1 060**	1 280	218	6	1 212,7	9,5	17,7
239/1060-B-K-MB	2	1 080	**1 060**	1 400	250	7,5	1 307,6	12,5	23,5
239/1060-B-MB	2	1 080	**1 060**	1 400	250	7,5	1 307,6	12,5	23,5
Z-541834.249/1060-B	3	1 470	**1 060**	1 400	335	7,5	1 290,7	12,5	23,5
249/1060-B-K30-MB	2	1 540	**1 060**	1 400	335	7,5	1 290,7	12,5	23,5
249/1060-B-MB	2	1 540	**1 060**	1 400	335	7,5	1 290,7	12,5	23,5
230/1060-B-K-MB	2	1 920	**1 060**	1 500	325	9,5	1 374,4	12,5	23,5
230/1060-B-MB	2	1 920	**1 060**	1 500	325	9,5	1 374,4	12,5	23,5
240/1060-B-K30-MB	2	2 520	**1 060**	1 500	438	9,5	1 353,5	12,5	23,5
240/1060-B-MB	2	2 520	**1 060**	1 500	438	9,5	1 353,5	12,5	23,5

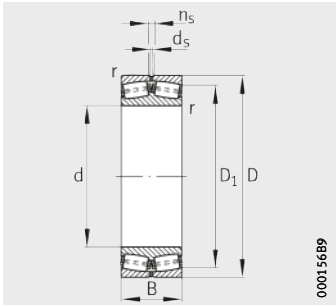

Design 3
Cylindrical bore with pin cage

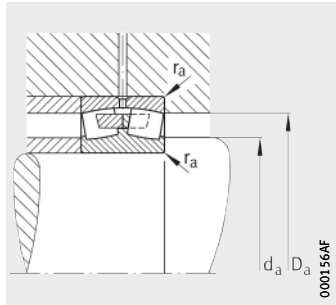

Design 2
Mounting dimensions

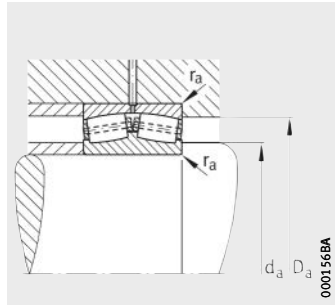

Design 3
Mounting dimensions

Mounting dimensions			Basic load ratings		Calculation factors				Fatigue limit load	Limiting speed	Reference speed
d_a	D_a	r_a	dyn. C_r	stat. C_{0r}	e	Y_1	Y_2	Y_0	C_{ur}	n_G	n_B
min.	max.	max.	kN	kN					kN	min^{-1}	min^{-1}
998	1 452	10	20 000	45 500	0,29	2,33	3,47	2,28	2 210	300	140
998	1 452	10	20 000	45 500	0,29	2,33	3,47	2,28	2 210	300	140
998	1 452	10	23 600	54 000	0,36	1,87	2,79	1,83	1 720	260	80
998	1 452	10	23 600	54 000	0,36	1,87	2,79	1,83	1 720	260	80
1 023	1 197	5	4 900	15 000	0,12	5,72	8,51	5,59	960	360	–
1 023	1 197	5	4 900	15 000	0,12	5,72	8,51	5,59	960	360	–
1 023	1 197	5	6 700	21 600	0,16	4,28	6,37	4,19	1 220	300	–
1 023	1 197	5	6 700	21 600	0,16	4,28	6,37	4,19	1 220	300	–
1 028	1 292	6	8 150	21 600	0,16	4,22	6,29	4,13	1 420	340	220
1 028	1 292	6	8 150	21 600	0,16	4,22	6,29	4,13	1 420	340	220
1 065	1 250	6	10 400	28 000	0,2	3,42	5,09	3,34	940	630	–
1 028	1 292	6	11 400	31 000	0,22	3,01	4,48	2,94	1 840	280	–
1 028	1 292	6	11 400	31 000	0,22	3,01	4,48	2,94	1 840	280	–
1 028	1 250	6	12 500	35 500	0,21	3,24	4,82	3,16	2 050	280	–
1 028	1 392	6	13 200	31 500	0,21	3,2	4,77	3,13	1 570	340	200
1 028	1 392	6	13 200	31 500	0,21	3,2	4,77	3,13	1 570	340	200
1 028	1 392	6	16 600	42 500	0,28	2,41	3,59	2,35	2 550	260	140
1 028	1 392	6	16 600	42 500	0,28	2,41	3,59	2,35	2 550	260	140
1 048	1 532	10	22 000	51 000	0,29	2,33	3,47	2,28	3 150	280	130
1 048	1 532	10	22 000	51 000	0,29	2,33	3,47	2,28	3 150	280	130
1 048	1 532	10	27 500	64 000	0,35	1,91	2,85	1,87	4 000	260	70
1 048	1 532	10	27 500	64 000	0,35	1,91	2,85	1,87	4 000	260	70
1 117	1 562	12	27 000	65 500	0,32	2,12	3,15	2,07	3 900	260	67
1 083	1 257	5	5 100	16 000	0,11	6,18	9,2	6,04	980	340	–
1 083	1 257	5	5 100	16 000	0,11	6,18	9,2	6,04	980	340	–
1 083	1 257	5	6 950	22 800	0,15	4,54	6,75	4,43	1 280	280	–
1 083	1 257	5	6 950	22 800	0,15	4,54	6,75	4,43	1 280	280	–
1 088	1 372	6	9 800	26 000	0,17	4,05	6,04	3,96	1 590	300	200
1 088	1 372	6	9 800	26 000	0,17	4,05	6,04	3,96	1 590	300	200
1 088	1 325	6	12 700	36 500	0,2	3,31	4,92	3,23	1 190	260	–
1 088	1 372	6	12 900	36 000	0,21	3,17	4,72	3,1	2 270	260	–
1 088	1 372	6	12 900	36 000	0,21	3,17	4,72	3,1	2 270	260	–
1 094	1 466	8	14 300	35 500	0,21	3,27	4,87	3,2	1 740	280	240
1 094	1 466	8	14 300	35 500	0,21	3,27	4,87	3,2	1 740	280	240
1 094	1 466	8	18 600	50 000	0,27	2,47	3,67	2,41	2 950	260	120
1 094	1 466	8	18 600	50 000	0,27	2,47	3,67	2,41	2 950	260	120

Spherical roller bearings

Cylindrical or tapered bore

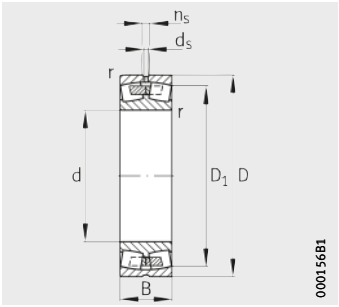

Design 2
With central rib
Cylindrical bore

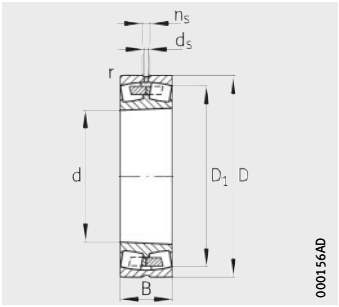

With central rib
K = taper 1:12
K30 = taper 1:30

Dimension table (continued) · Dimensions in mm

Designation	Design	Mass	Dimensions						
		m	d	D	B	r	D_1	d_s	n_s
		≈kg				min.	≈		
241/1060-B-K30-MB	2	5 000	**1 060**	1 660	600	15	–	12,5	23,5
241/1060-B-MB	2	5 000	**1 060**	1 660	600	15	–	12,5	23,5
238/1120-K-MB	2	515	**1 120**	1 360	180	6	1 292,9	9,5	17,7
238/1120-MB	2	515	**1 120**	1 360	180	6	1 292,9	9,5	17,7
248/1120-B-K30-MB	2	778	**1 120**	1 360	243	6	1 285	9,5	17,7
248/1120-B-MB	2	778	**1 120**	1 360	243	6	1 285	9,5	17,7
239/1120-B-K-MB	2	1 160	**1 120**	1 460	250	7,5	1 368,1	12,5	23,5
239/1120-B-MB	2	1 160	**1 120**	1 460	250	7,5	1 368,1	12,5	23,5
249/1120-B-K30-MB	2	1 510	**1 120**	1 460	335	7,5	1 352,5	12,5	23,5
249/1120-B-MB	2	1 510	**1 120**	1 460	335	7,5	1 352,5	12,5	23,5
Z-541835.249/1120-B	3	1 520	**1 120**	1 460	335	13/7,5[1)]	1 352,5	12,5	23,5
230/1120-B-K-MB	2	2 210	**1 120**	1 580	345	9,5	1 447,7	12,5	23,5
230/1120-MB	2	2 210	**1 120**	1 580	345	9,5	1 447,7	12,5	23,5
240/1120-B-K30-MB	2	2 920	**1 120**	1 580	462	9,5	1 429,7	12,5	23,5
240/1120-B-MB	2	2 920	**1 120**	1 580	462	9,5	1 429,7	12,5	23,5
F-804636.PRL	2	2 920	**1 120**	1 580	462	9,5	1 429,9	12,5	23,5
241/1120-B-K30-MB	2	5 800	**1 120**	1 750	630	15	1 527,2	12,5	23,5
241/1120-B-MB	2	5 800	**1 120**	1 750	630	15	1 527,2	12,5	23,5
238/1180-B-K-MB	2	591	**1 180**	1 420	180	6	1 353,9	9,5	17,7
238/1180-B-MB	2	591	**1 180**	1 420	180	6	1 353,9	9,5	17,7
248/1180-B-MB	2	790	**1 180**	1 420	243	6	1 345	9,5	17,7
248/1180-B-K30-MB	2	1 030	**1 180**	1 420	243	6	1 345	9,5	17,7
239/1180-B-K-MB	2	1 340	**1 180**	1 540	272	7,5	1 438,3	12,5	23,5
239/1180-B-MB	2	1 380	**1 180**	1 540	272	7,5	1 438,3	12,5	23,5
249/1180-B-K30-MB	2	2 320	**1 180**	1 540	355	7,5	1 428,9	12,5	23,5
249/1180-B-MB	2	2 320	**1 180**	1 540	355	7,5	1 428,9	12,5	23,5
Z-541836.249/1180-B	3	1 750	**1 180**	1 540	355	7,5	1 428,9	12,5	23,5
230/1180-B-K-MB	2	2 510	**1 180**	1 660	355	9,5	1 523,4	12,5	23,5
230/1180-MB	2	2 510	**1 180**	1 660	355	9,5	1 523,4	12,5	23,5
241/1180-B-K30-MB	2	7 040	**1 180**	1 850	670	15	1 603,9	12,5	23,5
241/1180-B-MB	2	7 040	**1 180**	1 850	670	15	1 603,9	12,5	23,5
238/1250-K-MB	2	743	**1 250**	1 500	185	6	1 429,3	9,5	17,7
238/1250-MB	2	743	**1 250**	1 500	185	6	1 429,3	9,5	17,7
248/1250-B-K30-MB	2	918	**1 250**	1 500	250	6	1 423,5	9,5	17,7
248/1250-B-MB	2	918	**1 250**	1 500	250	6	1 423,5	9,5	17,7

[1)] Chamfer dimension on inner ring = 13 mm, chamfer dimension on outer ring = 7,5 mm.

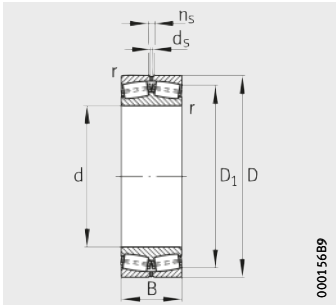

Design 3
Cylindrical bore with pin cage

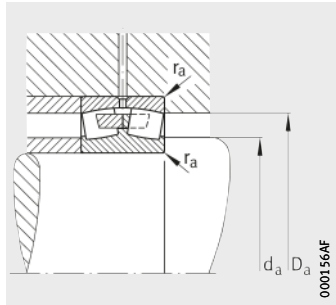

Design 2
Mounting dimensions

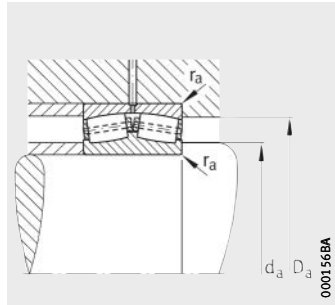

Design 3
Mounting dimensions

Mounting dimensions			Basic load ratings		Calculation factors				Fatigue limit load	Limiting speed	Reference speed
d_a	D_a	r_a	dyn. C_r	stat. C_{0r}	e	Y_1	Y_2	Y_0	C_{ur}	n_G	n_B
min.	max.	max.	kN	kN					kN	min^{-1}	min^{-1}
1 118	1 602	12	29 000	69 500	0,35	1,95	2,9	1,91	4 100	260	67
1 118	1 602	12	29 000	69 500	0,35	1,95	2,9	1,91	4 100	260	67
1 143	1 337	5	5 850	18 300	0,12	5,83	8,67	5,7	–	300	–
1 143	1 337	5	5 850	18 300	0,12	5,83	8,67	5,7	–	300	–
1 143	1 337	5	8 150	27 000	0,16	4,28	6,37	4,19	1 490	260	–
1 143	1 337	5	8 150	27 000	0,16	4,28	6,37	4,19	1 490	260	–
1 148	1 432	6	10 200	27 500	0,16	4,28	6,37	4,19	1 740	280	190
1 148	1 432	6	10 200	27 500	0,16	4,28	6,37	4,19	1 740	280	190
1 148	1 432	6	12 900	36 500	0,22	3,14	4,67	3,07	1 720	260	–
1 148	1 432	6	12 900	36 500	0,22	3,14	4,67	3,07	1 720	260	–
1 195	1 385	10/6	14 300	41 500	0,2	3,38	5,03	3,3	1 300	260	–
1 154	1 546	8	15 000	38 000	0,21	3,27	4,87	3,2	2 130	260	180
1 154	1 546	8	15 000	38 000	0,21	3,27	4,87	3,2	2 130	260	180
1 154	1 546	8	20 800	55 000	0,28	2,45	3,64	2,39	3 250	260	110
1 154	1 546	8	20 800	55 000	0,28	2,45	3,64	2,39	3 250	260	110
1 154	1 546	8	20 800	55 000	0,28	2,45	3,64	2,39	3 250	260	110
1 178	1 692	12	31 000	72 000	0,35	1,91	2,85	1,87	3 950	240	60
1 178	1 692	12	31 000	72 000	0,35	1,91	2,85	1,87	3 950	240	60
1 203	1 397	5	6 000	19 300	0,11	6,18	9,2	6,04	1 110	280	–
1 203	1 397	5	6 000	19 300	0,11	6,18	9,2	6,04	1 110	280	–
1 203	1 397	5	8 300	28 000	0,15	4,54	6,75	4,43	1 550	260	–
1 203	1 397	5	8 300	28 000	0,15	4,54	6,75	4,43	1 550	260	–
1 208	1 512	6	11 400	31 000	0,17	4,05	6,04	3,96	1 760	260	180
1 208	1 512	6	11 400	31 000	0,17	4,05	6,04	3,96	1 760	260	180
1 208	1 512	6	14 600	41 500	0,22	3,14	4,67	3,07	2 380	500	–
1 208	1 512	6	14 600	41 500	0,22	3,14	4,67	3,07	2 380	500	–
1 260	1 460	6	15 000	42 500	0,2	3,42	5,09	3,34	1 470	280	–
1 214	1 626	8	16 600	41 500	0,21	3,27	4,87	3,2	2 400	260	170
1 214	1 626	8	16 600	41 500	0,21	3,27	4,87	3,2	2 400	260	170
1 238	1 792	12	35 500	86 500	0,34	1,99	2,96	1,94	4 900	220	53
1 238	1 792	12	35 500	86 500	0,34	1,99	2,96	1,94	4 900	220	53
1 273	1 477	5	6 400	20 800	0,11	6,3	9,39	6,16	–	260	–
1 273	1 477	5	6 400	20 800	0,11	6,3	9,39	6,16	–	260	–
1 273	1 477	5	9 000	30 500	0,14	4,67	6,96	4,57	1 230	240	–
1 273	1 477	5	9 000	30 500	0,14	4,67	6,96	4,57	1 230	240	–

Spherical roller bearings

Cylindrical or tapered bore

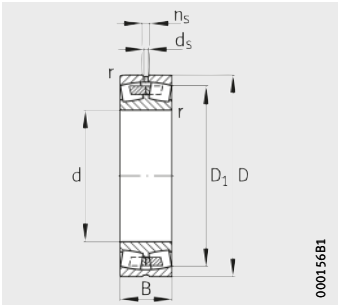

Design 2
With central rib
Cylindrical bore

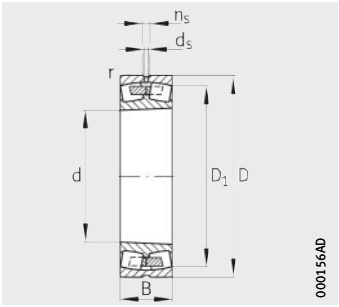

With central rib
K = taper 1:12
K30 = taper 1:30

Dimension table (continued) · Dimensions in mm

Designation	Design	Mass	Dimensions						
		m	d	D	B	r	D_1	d_s	n_s
		≈kg				min.	≈		
239/1250-B-K-MB	2	1 630	**1 250**	1 630	280	7,5	1 516,4	12,5	23,5
239/1250-B-MB	2	1 630	**1 250**	1 630	280	7,5	1 516,4	12,5	23,5
Z-541837.249/1250-B	3	2 160	**1 250**	1 630	375	7,5	1 510,5	12,5	23,5
230/1250-B-K-MB	2	2 920	**1 250**	1 750	375	9,5	1 607,6	12,5	23,5
230/1250-B-MB	2	2 930	**1 250**	1 750	375	9,5	1 607,6	12,5	23,5
240/1250-B-K30-MB	2	3 640	**1 250**	1 750	500	9,5	1 580,6	12,5	23,5
240/1250-B-MB	2	3 640	**1 250**	1 750	500	9,5	1 580,6	12,5	23,5
241/1250-B-K30-MB	2	8 000	**1 250**	1 950	710	15	–	12,5	23,5
241/1250-B-MB	2	8 000	**1 250**	1 950	710	15	–	12,5	23,5
238/1320-B-K-MB	2	895	**1 320**	1 600	206	6	1 521,4	12,5	23,5
238/1320-B-MB	2	895	**1 320**	1 600	206	6	1 521,4	12,5	23,5
248/1320-B-K30-MB	2	1 230	**1 320**	1 600	280	7,5	1 512,8	12,5	23,5
248/1320-B-MB	2	1 230	**1 320**	1 600	280	7,5	1 512,8	12,5	23,5
239/1320-B-K-MB	2	1 950	**1 320**	1 720	300	7,5	1 602,2	12,5	23,5
239/1320-B-MB	2	1 950	**1 320**	1 720	300	7,5	1 602,2	12,5	23,5
Z-541838.249/1320-B	3	2 530	**1 320**	1 720	400	7,5	1 592,5	12,5	23,5
249/1320-B-K30-MB	2	2 560	**1 320**	1 720	400	7,5	1 595,5	12,5	23,5
249/1320-B-MB	2	2 560	**1 320**	1 720	400	7,5	1 595,5	12,5	23,5
230/1320-MB	2	3 500	**1 320**	1 850	400	12	1 697,8	12,5	23,5
238/1400-B-K-MB	2	1 110	**1 400**	1 700	224	7,5	1 613,9	12,5	23,5
238/1400-B-MB	2	1 110	**1 400**	1 700	224	7,5	1 613,9	12,5	23,5
248/1400-B-K30-MB	2	1 450	**1 400**	1 700	300	7,5	1 606,9	12,5	23,5
248/1400-B-MB	2	1 470	**1 400**	1 700	300	7,5	1 606,9	12,5	23,5
239/1400-B-K-MB	2	2 200	**1 400**	1 820	315	9,5	1 695,6	12,5	23,5
239/1400-B-MB	2	2 210	**1 400**	1 820	315	9,5	1 695,6	12,5	23,5
249/1400-K30-MB	2	2 930	**1 400**	1 820	425	9,5	1 687,1	12,5	23,5
249/1400-MB	2	2 930	**1 400**	1 820	425	9,5	1 687,1	12,5	23,5
230/1400-MB	2	4 050	**1 400**	1 950	412	12	1 793,5	12,5	23,5
240/1400-B-K30-MB	2	5 170	**1 400**	1 950	545	12	1 766,8	12,5	23,5
240/1400-B-MB	2	5 170	**1 400**	1 950	545	12	1 766,8	12,5	23,5
238/1500-K-MB	2	1 380	**1 500**	1 820	243	7	1 729,3	12,5	23,5
238/1500-MB	2	1 380	**1 500**	1 820	243	7	1 729,3	12,5	23,5
248/1500-B-K30-MB	2	1 660	**1 500**	1 820	315	7,5	1 722,1	12,5	23,5
248/1500-B-MB	2	1 660	**1 500**	1 820	315	7,5	1 722,1	12,5	23,5

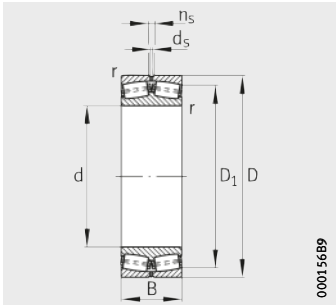

Design 3
Cylindrical bore with pin cage

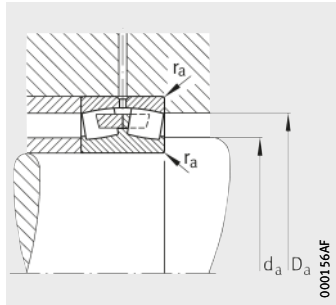

Design 2
Mounting dimensions

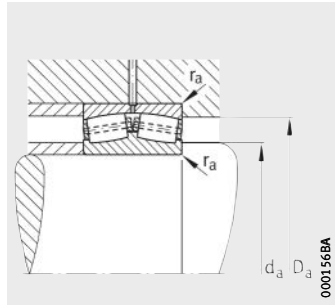

Design 3
Mounting dimensions

Mounting dimensions			Basic load ratings		Calculation factors				Fatigue limit load	Limiting speed	Reference speed
d_a	D_a	r_a	dyn. C_r	stat. C_{0r}	e	Y_1	Y_2	Y_0	C_{ur}	n_G	n_B
min.	max.	max.	kN	kN					kN	min^{-1}	min^{-1}
1 278	1 602	6	12 000	32 500	0,15	4,47	6,65	4,37	1 970	260	160
1 278	1 602	6	12 000	32 500	0,15	4,47	6,65	4,37	1 970	260	160
1 148	1 550	6	16 000	50 000	0,19	3,5	5,21	3,42	1 530	240	–
1 284	1 716	8	18 000	46 500	0,2	3,34	4,98	3,27	2 700	260	150
1 284	1 716	8	18 000	46 500	0,2	3,34	4,98	3,27	2 700	260	150
1 284	1 716	8	23 200	62 000	0,25	2,69	4	2,63	3 600	240	–
1 284	1 716	8	23 200	62 000	0,25	2,69	4	2,63	3 600	240	–
1 308	1 892	12	37 500	91 500	0,34	1,99	2,96	1,94	5 100	220	50
1 308	1 892	12	37 500	91 500	0,34	1,99	2,96	1,94	5 100	220	50
1 343	1 577	5	7 650	24 500	0,11	6,18	9,2	6,04	1 500	260	–
1 343	1 577	5	7 650	24 500	0,11	6,18	9,2	6,04	1 500	260	–
1 343	1 577	5	10 200	35 500	0,15	4,4	6,56	4,31	1 880	240	–
1 343	1 577	5	10 200	35 500	0,15	4,4	6,56	4,31	1 880	240	–
1 348	1 692	6	13 700	39 000	0,16	4,28	6,37	4,19	2 190	260	150
1 348	1 692	6	13 700	39 000	0,16	4,28	6,37	4,19	2 190	260	150
1 348	1 640	6	17 300	52 000	0,19	3,54	5,27	3,46	1 650	220	–
1 348	1 692	6	17 600	52 000	0,22	3,1	4,62	3,03	2 460	220	–
1 348	1 692	6	17 600	52 000	0,22	3,1	4,62	3,03	2 460	220	–
1 362	1 808	10	20 400	53 000	0,21	3,2	4,77	3,13	2 900	240	140
1 428	1 672	6	8 650	28 000	0,11	5,94	8,84	5,81	1 470	240	–
1 428	1 672	6	8 650	28 000	0,11	5,94	8,84	5,81	1 470	240	–
1 428	1 672	6	12 000	40 500	0,16	4,34	6,47	4,25	2 200	220	–
1 428	1 672	6	12 000	40 500	0,16	4,34	6,47	4,25	2 200	220	–
1 434	1 786	8	14 600	42 500	0,16	4,28	6,37	4,19	2 390	240	140
1 434	1 786	8	14 600	42 500	0,16	4,28	6,37	4,19	2 390	240	140
1 434	1 786	8	20 000	58 500	0,21	3,2	4,77	3,13	–	220	–
1 434	1 786	8	20 000	58 500	0,21	3,2	4,77	3,13	2 850	220	–
1 442	1 908	10	22 000	57 000	0,2	3,34	4,98	3,27	–	220	130
1 442	1 908	10	28 000	76 500	0,24	2,76	4,11	2,7	4 450	220	80
1 442	1 908	10	28 000	76 500	0,24	2,76	4,11	2,7	4 450	220	80
1 528	1 792	6	10 000	33 500	0,12	5,83	8,67	5,7	1 910	220	–
1 528	1 792	6	10 000	33 500	0,12	5,83	8,67	5,7	1 910	220	–
1 528	1 792	6	12 900	45 000	0,15	4,47	6,65	4,37	2 390	220	–
1 528	1 792	6	12 900	45 000	0,15	4,47	6,65	4,37	2 390	220	–

Spherical roller bearings

Cylindrical or tapered bore

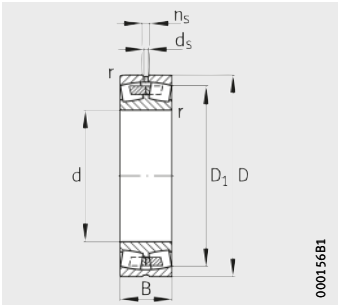

Design 2
With central rib
Cylindrical bore

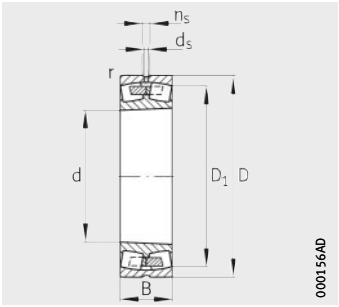

With central rib
K = taper 1:12
K30 = taper 1:30

Dimension table (continued) · Dimensions in mm

Designation	Design	Mass	Dimensions						
		m	d	D	B	r	D_1	d_s	n_s
		≈kg				min.	≈		
239/1500-B-K-MB	2	2 790	**1 500**	1 950	335	9,5	1 817,2	12,5	23,5
239/1500-B-MB	2	2 790	**1 500**	1 950	335	9,5	1 817,2	12,5	23,5
249/1500-B-K30-MB	2	3 630	**1 500**	1 950	450	9,5	1 799,6	12,5	23,5
249/1500-B-MB	2	3 630	**1 500**	1 950	450	9,5	1 799,6	12,5	23,5
240/1500-B-K30-MB	2	5 840	**1 500**	2 120	615	12	1 905,3	12,5	23,5
240/1500-B-MB	2	5 840	**1 500**	2 120	615	12	1 905,3	12,5	23,5
231/1500-B-K-MB	2	5 530	**1 500**	2 300	600	15	2 060,4	12,5	23,5
231/1500-B-MB	2	5 530	**1 500**	2 300	600	15	2 060,4	12,5	23,5
241/1500-B-K30-MB	2	12 200	**1 500**	2 300	800	15	2 014	12,5	23,5
241/1500-B-MB	2	12 200	**1 500**	2 300	800	15	2 014	12,5	23,5
238/1600-B-MB	2	1 770	**1 600**	1 950	265	7,5	1 848,5	12,5	23,5
248/1600-B-K30-MB	2	2 220	**1 600**	1 950	345	7,5	1 846,9	12,5	23,5
248/1600-B-MB	2	2 220	**1 600**	1 950	345	7,5	1 846,9	12,5	23,5
239/1600-B-MB	2	3 020	**1 600**	2 060	345	9,5	1 919,2	12,5	23,5
249/1600-MB	2	4 710	**1 600**	2 060	462	9,5	1 915,4	12,5	23,5
238/1700-MB	2	2 130	**1 700**	2 060	272	7,5	1 952,5	12,5	23,5
248/1700-MB	2	3 100	**1 700**	2 060	355	7,5	1 946,7	12,5	23,5
239/1700-B-MB	2	3 550	**1 700**	2 180	355	9,5	2 030,9	12,5	23,5
249/1700-B-MB	2	5 830	**1 700**	2 180	475	9,5	2 029,4	12,5	23,5
238/1800-MB	2	2 440	**1 800**	2 180	290	9,5	2 061,1	12,5	23,5
248/1800-B-MB	2	2 840	**1 800**	2 180	375	9,5	2 060	12,5	23,5
239/1800-MB	2	4 100	**1 800**	2 300	375	12	2 144,5	12,5	23,5
249/1800-MB	2	6 070	**1 800**	2 300	500	12	2 140,6	12,5	23,5
238/1900-MB	2	2 860	**1 900**	2 300	300	9,5	2 180,8	12,5	23,5
248/1900-MB	2	3 570	**1 900**	2 300	400	9,5	2 173,3	12,5	23,5
239/1900-MB	2	4 350	**1 900**	2 430	400	12	2 262,6	12,5	23,5
249/1900-MB	2	6 320	**1 900**	2 430	530	12	2 261	12,5	23,5
238/2000-MB	2	3 430	**2 000**	2 430	325	9,5	2 298,5	12,5	23,5
248/2000-B-MB	2	4 320	**2 000**	2 430	425	9,5	2 294,8	12,5	23,5
F-804544.PRL	2, K30	2 280	**2 040**	2 660	400	7,5	2 457	15	30
F-804543.PRL	2, K30	5 190	**2 100**	2 625	400	7,5	2 457	15	30

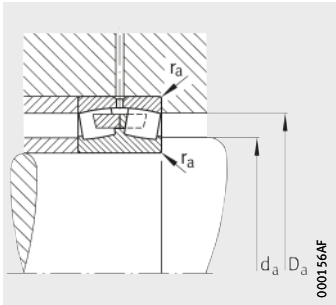

Mounting dimensions

Mounting dimensions			Basic load ratings		Calculation factors				Fatigue limit load	Limiting speed	Reference speed
d_a	D_a	r_a	dyn. C_r	stat. C_{0r}	e	Y_1	Y_2	Y_0	C_{ur}	n_G	n_B
min.	max.	max.	kN	kN					kN	min^{-1}	min^{-1}
1 534	1 916	8	16 300	49 000	0,16	4,28	6,37	4,19	2 550	220	130
1 534	1 916	8	16 300	49 000	0,16	4,28	6,37	4,19	2 550	220	130
1 534	1 916	8	21 600	67 000	0,22	3,14	4,67	3,07	2 700	200	–
1 534	1 916	8	21 600	67 000	0,22	3,14	4,67	3,07	2 700	200	–
1 542	2 078	10	34 000	93 000	0,26	2,64	3,93	2,58	5 400	200	–
1 542	2 078	10	34 000	93 000	0,26	2,64	3,93	2,58	5 400	200	–
1 558	2 242	12	40 000	96 500	0,25	2,67	3,97	2,61	5 600	220	67
1 558	2 242	12	40 000	96 500	0,25	2,67	3,97	2,61	5 600	220	67
1 558	2 242	12	45 000	110 000	0,32	2,1	3,13	2,06	5 900	220	50
1 558	2 242	12	45 000	110 000	0,32	2,1	3,13	2,06	5 900	220	50
1 628	1 922	6	11 600	39 000	0,12	5,72	8,51	5,59	2 060	220	–
1 628	1 922	6	16 000	54 000	0,15	4,54	6,75	4,43	3 000	200	–
1 628	1 922	6	16 000	54 000	0,15	4,54	6,75	4,43	3 000	200	–
1 634	2 026	8	17 300	52 000	0,15	4,6	6,85	4,5	2 850	220	120
1 634	2 026	8	23 600	73 500	0,21	3,24	4,82	3,16	–	200	–
1 728	2 032	6	12 500	42 500	0,11	5,94	8,84	5,81	–	220	–
1 728	2 032	6	17 000	60 000	0,15	4,47	6,65	4,37	–	180	–
1 734	2 146	8	19 300	60 000	0,15	4,6	6,85	4,5	–	220	110
1 734	2 146	8	25 000	78 000	0,21	3,27	4,87	3,2	–	170	–
1 834	2 146	8	14 000	47 500	0,12	5,83	8,67	5,7	–	200	–
1 834	2 146	8	18 600	67 000	0,15	4,47	6,65	4,37	3 400	170	–
1 842	2 258	10	20 800	64 000	0,15	4,54	6,75	4,43	–	200	170
1 842	2 258	10	27 000	85 000	0,21	3,27	4,87	3,2	–	150	–
1 842	2 258	10	15 300	53 000	0,11	5,94	8,84	5,81	–	180	–
1 934	2 266	8	20 800	75 000	0,15	4,4	6,56	4,31	–	150	–
1 934	2 266	8	23 200	73 500	0,15	4,54	6,75	4,43	–	180	90
1 942	2 388	10	30 000	95 000	0,21	3,27	4,87	3,2	–	140	–
1 942	2 388	10	17 300	58 500	0,12	5,83	8,67	5,7	–	170	–
2 034	2 396	8	23 200	83 000	0,14	4,67	6,96	4,57	4 400	140	–
2 078	2 466	6	22 400	72 000	0,13	5,14	7,66	5,03	3 700	150	–
2 138	2 466	6	22 400	72 000	0,13	5,14	7,66	5,03	3 700	150	–

Spherical roller bearings

With adapter sleeve

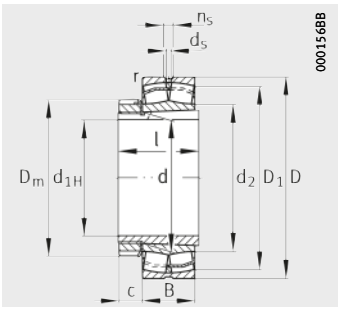

E1 design

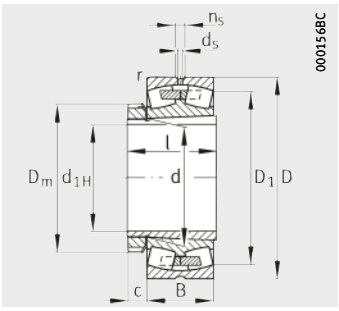

With central rib
Locknut with tab washer

Dimension table · Dimensions in mm

Designation			Mass m		Dimensions										
Bearing	X-life	Adapter sleeve	Bearing ≈kg	Adapter sleeve ≈kg	d_{1H}	d	D	B	r min.	D_1 ≈	d_2 ≈	d_s	n_s	D_m	l
22330-E1-K	**XL**	**H2330**	41,2	6,76	**135**	150	320	108	4	273,2	185,3	9,5	17,7	195	139
22330-E1-K-T41A	**XL**	**H2330**	41,2	6,76	**135**	150	320	108	4	273,2	185,3	9,5	17,7	195	139
22332-K-MB	–	**H2332**	50,1	9,32	**140**	160	340	114	4	288,3	–	9,5	17,7	210	147
22334-K-MB	–	**H2334**	58,4	10,4	**150**	170	360	120	4	304,2	–	9,5	17,7	220	154
22236-E1-K	**XL**	**H3136**	28,5	9,67	**160**	180	320	86	4	285,9	211,3	9,5	17,7	230	131
23236-E1A-K-M	**XL**	**H2336**	37	11,6	**160**	180	320	112	4	277,3	–	8	15	230	161
22336-K-MB	–	**H2336**	66,7	11,6	**160**	180	380	126	4	323,4	–	12,5	23,5	230	161
23138-E1A-K-M	**XL**	**H3138**	32,4	11	**170**	190	320	104	3	281,6	–	8	15	240	141
24138-E1-K30[1]	**XL**	**H24138**	39,5	11,9	**170**	190	320	128	3	269,7	217,5	6,3	12,2	240	172
22238-K-MB	–	**H3138**	36,2	11	**170**	190	340	92	4	296	–	9,5	17,7	240	141
23238-B-K-MB	–	**H2338**	46	12,9	**170**	190	340	120	4	291,2	–	9,5	17,7	240	169
22338-K-MB	–	**H2338**	77,3	12,9	**170**	190	400	132	5	338,2	–	12,5	23,5	240	169
23140-B-K-MB	–	**H3140**	41,7	12,3	**180**	200	340	112	3	293,3	–	9,5	17,7	250	150
24140-B-K30	–	**H24140**	51,6	13,4	**180**	200	340	140	3	285,9	–	6,3	12,2	250	185
22240-B-K-MB	–	**H3140**	42,3	12,3	**180**	200	360	98	4	312	–	9,5	17,7	250	150
23240-B-K-MB	–	**H2340**	55,8	14,2	**180**	200	360	128	4	307,5	–	9,5	17,7	250	176
22340-K-MB	–	**H2340**	89,5	14,2	**180**	200	420	138	5	357,4	–	12,5	23,5	250	176
23044-K-MB	–	**H3044X**	30,3	10,5	**200**	220	340	90	3	301,8	–	8	15	260	126
24044-B-K30-MB	–	**H24044**	38,9	12,1	**200**	220	340	118	3	297,4	–	6,3	12,2	260	162
23144-B-K-MB	–	**H3144X**	52	15,7	**200**	220	370	120	4	319,2	–	9,5	17,7	280	161
24144-B-K30	–	**H24144**	64,4	17,1	**200**	220	370	150	4	311,7	–	6,3	12,2	280	199
22244-B-K-MB	–	**H3144X**	59,6	15,7	**200**	220	400	108	4	348,7	–	9,5	17,7	280	161
23244-K-MB	–	**H2344X**	79	17,8	**200**	220	400	144	4	337,6	–	9,5	17,7	280	186
22344-K-MB	–	**H2344X**	114	17,8	**200**	220	460	145	5	391,2	–	12,5	23,5	280	186
23948-K-MB	–	**H3948**	13,4	11,3	**220**	240	320	60	2,1	297,8	–	6,3	12,2	290	101
23048-K-MB	–	**H3048**	31,9	13,8	**220**	240	360	92	3	322,1	–	8	15	290	133
24048-B-K30-MB	–	**H24048**	43,2	15,3	**220**	240	360	118	3	318,9	–	6,3	12,2	290	167
23148-B-K-MB	–	**H3148X**	65,3	18,4	**220**	240	400	128	4	346,2	–	9,5	17,7	300	172
24148-B-K30	–	**H24148**	78,7	19,9	**220**	240	400	160	4	338	–	6,3	12,2	300	212
22248-B-K-MB	–	**H3148X**	81,2	18,4	**220**	240	440	120	4	380,7	–	12,5	23,5	300	172
23248-B-K-MB	–	**H2348X**	105	20,9	**220**	240	440	160	4	371	–	12,5	23,5	300	199
22348-K-MB	–	**H2348X**	145	20,9	**220**	240	500	155	5	420	–	12,5	23,5	300	199
23952-K-MB	–	**H3952**	22,4	13,6	**240**	260	360	75	2,1	330,5	–	8	15	310	116
23052-K-MB	–	**H3052X**	46,2	16	**240**	260	400	104	4	357,2	–	9,5	17,7	310	145
24052-B-K30-MB	–	**H24052**	64,5	18,4	**240**	260	400	140	4	349,1	–	6,3	12,2	310	190

[1] Cage guidance on inner ring central rib.

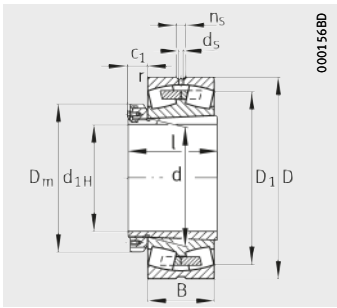

With central rib
Locknut with retaining bracket

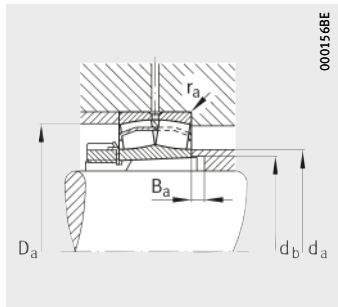

Mounting dimensions
E1 design

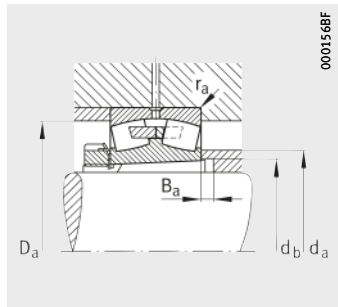

Mounting dimensions
With central rib

		Mounting dimensions					Basic load ratings		Calculation factors				Fatigue limit load	Limiting speed	Reference speed
c	c_1	d_a	D_a	d_b	B_a	r_a	dyn. C_r	stat. C_{0r}	e	Y_1	Y_2	Y_0	C_{ur}	n_G	n_B
≈	≈	max.	max.	min.	min.	max.	kN	kN					kN	min^{-1}	min^{-1}
26	–	185	303	163	8	3	1 640	1 850	0,33	2,02	3	1,97	148	2 200	1 520
26	–	185	303	163	8	3	1 640	1 850	0,33	2,02	3	1,97	148	2 200	1 520
28	–	191	323	174	8	3	1 430	1 900	0,37	1,8	2,69	1,76	121	2 000	1 500
29	–	204	343	185	8	3	1 600	2 120	0,37	1,83	2,72	1,79	134	1 800	1 380
30	–	211	303	191	18	3	1 360	1 680	0,25	2,71	4,04	2,65	148	2 400	1 670
30	–	210	303	195	21	3	1 710	2 340	0,33	2,07	3,09	2,03	173	2 000	1 090
30	–	217	363	195	8	3	1 760	2 360	0,37	1,83	2,72	1,79	209	1 500	1 270
31	–	216	306	202	9	2,5	1 610	2 220	0,3	2,28	3,39	2,23	218	2 000	1 260
31	–	213	306	197	17	2,5	1 670	2 500	0,37	1,82	2,7	1,78	226	1 400	880
31	–	223	323	202	21	3	1 200	1 830	0,28	2,39	3,56	2,34	122	1 800	1 600
31	–	222	323	206	21	3	1 560	2 600	0,36	1,86	2,77	1,82	156	1 700	1 020
31	–	228	380	206	9	4	1 860	2 500	0,37	1,83	2,72	1,79	213	1 500	1 220
32	–	231	326	212	10	2,5	1 320	2 280	0,35	1,95	2,9	1,91	131	1 700	1 230
32	–	225	326	207	17	2,5	1 700	3 000	0,42	1,62	2,42	1,59	190	1 400	810
32	–	234	343	212	24	3	1 320	2 000	0,29	2,35	3,5	2,3	123	1 700	1 530
32	–	237	343	216	20	3	1 660	2 750	0,37	1,83	2,72	1,79	163	1 500	980
32	–	240	400	216	10	4	2 080	2 800	0,36	1,87	2,79	1,83	189	1 400	1 120
–	40	247	327,6	231	12	2,5	1 100	2 000	0,26	2,55	3,8	2,5	132	1 700	1 440
–	40	245	327,6	228	17	2,5	1 400	2 700	0,34	1,96	2,92	1,92	139	1 300	1 070
35	–	253	353	233	10	3	1 630	2 900	0,33	2,03	3,02	1,98	165	1 400	1 060
35	–	247	353	228	18	3	1 900	3 450	0,41	1,63	2,43	1,6	197	1 300	720
35	–	258	383	233	22	3	1 630	2 450	0,29	2,35	3,5	2,3	153	1 400	1 300
35	–	259	383	236	11	3	2 040	3 450	0,37	1,83	2,72	1,79	181	1 400	850
35	–	272	440	236	10	4	2 320	3 350	0,35	1,95	2,9	1,91	217	1 300	970
–	45	261	309,8	250	11	2,1	640	1 370	0,17	4,05	6,04	3,96	93	1 500	1 310
–	45	268	347,6	251	11	2,5	1 160	2 200	0,25	2,74	4,08	2,68	130	1 400	1 310
–	45	263	347,6	253	12	2,5	1 500	2 900	0,32	2,1	3,13	2,06	150	1 300	970
37	–	276	383	254	11	3	1 860	3 250	0,33	2,06	3,06	2,01	177	1 300	970
37	–	270	383	248	19	3	2 120	3 900	0,41	1,66	2,47	1,62	231	1 200	660
37	–	283	423	254	19	3	1 960	3 050	0,29	2,35	3,5	2,3	184	1 300	1 180
37	–	284	423	257	6	3	2 450	4 250	0,37	1,8	2,69	1,76	231	1 300	750
37	–	296	480	257	11	4	2 650	3 900	0,35	1,95	2,9	1,91	249	1 500	870
–	45	285	349,8	270	11	2,1	930	1 930	0,19	3,54	5,27	3,46	108	1 400	1 190
–	45	291	385,4	272	13	3	1 500	2 800	0,26	2,64	3,93	2,58	155	1 300	1 160
–	45	287	385,4	269	20	3	1 900	3 800	0,35	1,94	2,88	1,89	204	1 100	870

Spherical roller bearings

With adapter sleeve

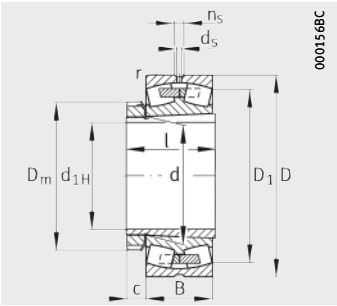

With central rib
Locknut with tab washer

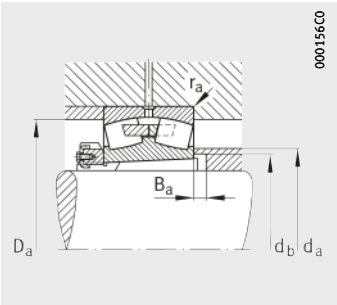

With central rib
Locknut with retaining bracket

Dimension table (continued) · Dimensions in mm

Designation		Mass m		Dimensions												
Bearing	Adapter sleeve	Bearing ≈kg	Adapter sleeve ≈kg	d_{1H}	d	D	B	r min.	D_1 ≈	d_s	n_s	D_m	l	c ≈	c_1 ≈
23152-K-MB	**H3152X**	89,6	23,5	**240**	260	440	144	4	379,7	9,5	17,7	330	190	38	–
24152-B-K30	**H24152**	112	25,2	**240**	260	440	180	4	370,3	8	15	330	235	38	–
22252-B-K-MB	**H3152X**	106	23,5	**240**	260	480	130	5	415,3	12,5	23,5	330	190	38	–
23252-B-K-MB	**H2352X**	136	25,7	**240**	260	480	174	5	405,4	12,5	23,5	330	211	38	–
22352-K-MB	**H2352X**	177	25,7	**240**	260	540	165	6	452,1	12,5	23,5	330	211	38	–
23956-K-MB	**H3956**	24,7	15,6	**260**	280	380	75	2,1	350	8	15	330	121	–	49
23056-B-K-MB	**H3056**	50,3	18,5	**260**	280	420	106	4	376,5	9,5	17,7	330	152	–	49
24056-B-K30-MB	**H24056**	69,7	20,9	**260**	280	420	140	4	369,5	6,3	12,2	330	195	–	49
23156-B-K-MB	**H3156X**	96,4	26,4	**260**	280	460	146	5	401,4	9,5	17,7	350	195	39	–
24156-B-K30	**H24156**	118	28	**260**	280	460	180	5	392,8	8	15	350	238	39	–
22256-B-K-MB	**H3156X**	110	26,4	**260**	280	500	130	5	435,2	12,5	23,5	350	195	39	–
23256-K-MB	**H2356X**	153	29,8	**260**	280	500	176	5	426,3	12,5	23,5	350	224	39	–
22356-K-MB	**H2356X**	224	29,8	**260**	280	580	175	6	489,3	12,5	23,5	350	224	39	–
23960-B-K-MB	**H3960**	39,1	20,9	**280**	300	420	90	3	384,6	9,5	17,7	360	140	–	53
23060-K-MB	**H3060**	72,2	23,8	**280**	300	460	118	4	412,6	9,5	17,7	360	168	–	53
24060-B-K30-MB	**H24060**	97,7	26,9	**280**	300	460	160	4	401,5	8	15	360	220	–	53
23160-B-K-MB	**H3160**	123	30,6	**280**	300	500	160	5	434,7	9,5	17,7	380	208	–	53
24160-B-K30	**H24160**	158	32,7	**280**	300	500	200	5	424,4	8	15	380	258	–	53
22260-K-MB	**H3160**	136	30,6	**280**	300	540	140	5	468,8	12,5	23,5	380	208	–	53
23260-K-MB	**H3260**	192	34,7	**280**	300	540	192	5	458,7	12,5	23,5	380	240	–	53
22360-K-MB	**H3260**	365	34,7	**280**	300	620	185	7,5	523,6	12,5	23,5	380	240	–	53
23964-K-MB	**H3964**	41	22	**300**	320	440	90	3	406,2	9,5	17,7	380	140	–	56
23064-K-MB	**H3064**	77,1	25,4	**300**	320	480	121	4	432,6	9,5	17,7	380	171	–	56
24064-B-K30-MB	**H24064**	103	28,4	**300**	320	480	160	4	424	8	15	380	220	–	56
23164-K-MB	**H3164**	167	35,4	**300**	320	540	176	5	466,2	12,5	23,5	400	226	–	56
24164-B-K30	**H24164**	197	37,4	**300**	320	540	218	5	456,1	9,5	17,7	400	278	–	56
22264-K-MB	**H3164**	166	35,4	**300**	320	580	150	5	503,5	12,5	23,5	400	226	–	56
23264-K-MB	**H3264**	229	40	**300**	320	580	208	5	489,6	12,5	23,5	400	258	–	56
22364-B-K-MB	**H3264**	433	40	**300**	320	670	200	7,5	568,1	12,5	23,5	400	258	–	56
23068-K-MB	**H3068**	101	30	**320**	340	520	133	5	464,6	12,5	23,5	400	187	–	57
24068-B-K30-MB	**H24068**	143	33,8	**320**	340	520	180	5	457,1	9,5	17,7	400	244	–	57
23168-B-K-MB	**H3168**	203	50,1	**320**	340	580	190	5	499,5	12,5	23,5	440	254	–	70
24168-B-K30	**H24168**	260	53	**320**	340	580	243	5	481,1	9,5	17,7	440	317	–	70
22268-B-K-MB	**H3168**	311	50,1	**320**	340	620	165	6	538,7	12,5	23,5	440	254	–	70
23268-B-K-MB	**H3268**	291	55,4	**320**	340	620	224	6	521,2	12,5	23,5	440	288	–	70

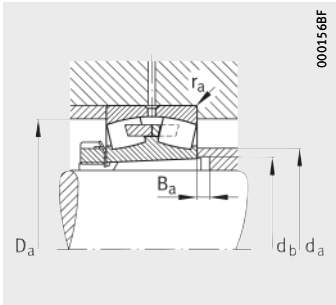

Mounting dimensions
With central rib

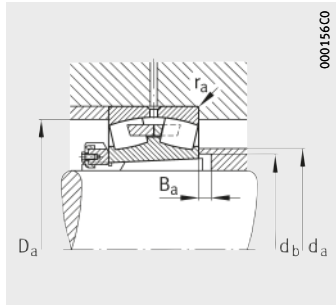

Mounting dimensions
With retaining bracket

Mounting dimensions					Basic load ratings		Calculation factors				Fatigue limit load	Limiting speed	Reference speed
d_a	D_a	d_b	B_a	r_a	dyn. C_r	stat. C_{0r}	e	Y_1	Y_2	Y_0	C_{ur}	n_G	n_B
max.	max.	min.	min.	max.	kN	kN					kN	min^{-1}	min^{-1}
302	423	276	11	3	2 200	4 000	0,33	2,03	3,02	1,98	213	1 200	850
294	423	269	19	3	2 700	5 100	0,42	1,61	2,4	1,58	315	1 100	550
308	460	276	25	4	2 240	3 450	0,29	2,32	3,45	2,26	217	1 100	1 070
309	460	278	2	4	2 900	4 900	0,37	1,8	2,69	1,76	270	1 100	660
322	514	278	11	5	3 000	4 400	0,34	2	2,98	1,96	290	1 100	790
303	369,8	290	12	2,1	970	2 040	0,18	3,76	5,59	3,67	129	1 300	1 100
310	405,4	292	12	3	1 560	3 000	0,25	2,74	4,08	2,68	156	1 300	1 090
307	405,4	289	20	3	2 000	4 000	0,33	2,04	3,04	2	225	1 100	810
321	440	296	12	4	2 360	4 400	0,32	2,12	3,15	2,07	241	1 100	780
316	440	289	21	4	2 700	5 200	0,39	1,71	2,54	1,67	365	1 000	520
324	480	296	28	4	2 360	3 650	0,28	2,43	3,61	2,37	238	1 100	1 010
329	480	299	11	4	3 000	5 300	0,36	1,86	2,77	1,82	260	1 100	620
349	554	299	12	5	3 550	5 400	0,33	2,03	3,02	1,98	335	950	680
329	407,6	311	12	2,5	1 270	2 650	0,2	3,42	5,09	3,34	165	1 190	1 000
337	445,4	313	12	3	1 960	3 650	0,25	2,69	4	2,63	223	1 100	960
331	445,4	310	21	3	2 500	5 200	0,35	1,95	2,9	1,91	300	1 000	700
347	480	318	12	4	2 650	4 900	0,33	2,06	3,06	2,01	270	1 100	720
340	480	311	21	4	3 250	6 300	0,4	1,67	2,49	1,63	540	900	455
352	520	318	32	4	2 750	4 400	0,27	2,47	3,67	2,41	300	1 000	900
353	520	321	12	4	3 450	6 200	0,37	1,83	2,72	1,79	300	1 000	560
374	588	321	19	6	4 000	6 100	0,33	2,06	3,06	2,01	375	900	630
349	427,6	332	12	2,5	1 310	2 750	0,19	3,62	5,39	3,54	202	1 100	930
357	465,4	334	13	3	2 040	4 000	0,25	2,74	4,08	2,68	243	1 100	900
353	465,4	330	21	3	2 600	5 400	0,33	2,06	3,06	2,01	360	950	660
369	520	338	13	4	3 200	6 000	0,34	1,98	2,94	1,93	305	950	650
362	520	332	21	4	3 800	7 350	0,41	1,65	2,46	1,61	530	850	415
378	560	338	39	4	3 050	4 900	0,27	2,47	3,67	2,41	345	950	830
378	560	343	13	4	3 900	6 950	0,37	1,8	2,69	1,76	330	950	510
406	638	343	20	6	4 400	6 800	0,33	2,06	3,06	2,01	540	800	560
382	502	355	14	4	2 360	4 550	0,25	2,69	4	2,63	285	1 000	840
378	502	351	15	4	3 100	6 550	0,34	1,98	2,94	1,93	530	850	600
395	560	360	14	4	3 650	6 950	0,34	1,98	2,94	1,93	570	900	590
383	560	353	23	4	4 400	8 500	0,43	1,56	2,32	1,53	680	800	380
405	594	360	39	5	3 550	5 850	0,28	2,43	3,61	2,37	470	850	750
402	594	364	14	5	4 500	8 150	0,38	1,78	2,65	1,74	650	850	465

Spherical roller bearings

With adapter sleeve

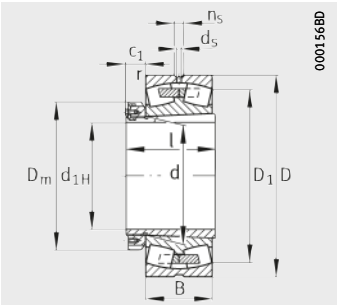

With central rib
Locknut with retaining bracket

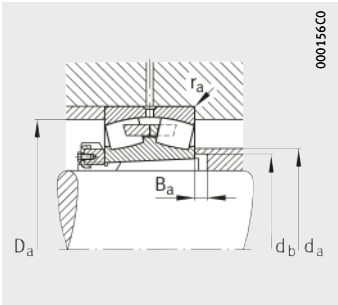

Mounting dimensions

Dimension table (continued) · Dimensions in mm

Designation		Mass m		Dimensions										
Bearing	Adapter sleeve	Bearing ≈kg	Adapter sleeve ≈kg	d_{1H}	d	D	B	r min.	D_1 ≈	d_s	n_s	D_m	l	c_1 ≈
23972-K-MB	**H3972**	45	25,9	**340**	360	480	90	3	447,1	9,5	17,7	420	144	57
23072-K-MB	**H3072**	107	31,6	**340**	360	540	134	5	485,2	12,5	23,5	420	188	57
24072-B-K30-MB	**H24072**	147	35,5	**340**	360	540	180	5	478,5	9,5	17,7	420	244	57
23172-K-MB	**H3172**	217	54,3	**340**	360	600	192	5	520	12,5	23,5	460	259	73
24172-B-K30	**H24172**	275	57,1	**340**	360	600	243	5	503,6	9,5	17,7	460	321	73
22272-K-MB	**H3172**	257	54,3	**340**	360	650	170	6	565	12,5	23,5	460	259	73
23272-B-K-MB	**H3272**	328	61	**340**	360	650	232	6	548,3	12,5	23,5	460	299	73
22372-K-MB	**H3272**	625	61	**340**	360	750	224	7,5	634,9	12,5	23,5	460	299	73
23976-K-MB	**H3976**	66,3	32,1	**360**	380	520	106	4	477,6	9,5	17,7	450	164	62
23076-B-K-MB	**H3076**	115	36,2	**360**	380	560	135	5	505,6	12,5	23,5	450	193	62
24076-B-K30-MB	**H24076**	155	40,1	**360**	380	560	180	5	499	9,5	17,7	450	248	62
23176-K-MB	**H3176**	226	62,4	**360**	380	620	194	5	539,6	12,5	23,5	490	264	75
24176-B-K30	**H24176**	277	64,9	**360**	380	620	243	5	525,8	9,5	17,7	490	323	75
22276-K-MB	**H3176**	284	62,4	**360**	380	680	175	6	592,6	12,5	23,5	490	264	75
23276-B-K-MB	**H3276**	367	70,7	**360**	380	680	240	6	576,4	12,5	23,5	490	310	75
23980-B-K-MB	**H3980**	68,2	35,4	**380**	400	540	106	4	499	9,5	17,7	470	168	66
23080-K-MB	**H3080**	143	41,7	**380**	400	600	148	5	540,5	12,5	23,5	470	210	66
24080-B-K30-MB	**H24080**	196	46,4	**380**	400	600	200	5	530,9	12,5	23,5	470	272	66
23180-B-K-MB	**H3180**	261	71,3	**380**	400	650	200	6	567,2	12,5	23,5	520	272	81
24180-B-K30	**H24180**	312	73,8	**380**	400	650	250	6	553,5	12,5	23,5	520	332	81
22280-K-MB	**H3180**	414	71,3	**380**	400	720	185	6	629,3	12,5	23,5	520	272	81
23280-B-K-MB	**H3280**	442	82,1	**380**	400	720	256	6	609,8	12,5	23,5	520	328	81
22380-K-MB	**H3280**	800	82,1	**380**	400	820	243	7,5	694,4	12,5	23,5	520	328	81
23984-K-MB	**H3984**	78	36,9	**400**	420	560	106	4	519,5	9,5	17,7	490	168	66
23084-B-K-MB	**H3084X**	155	43,8	**400**	420	620	150	5	560,7	12,5	23,5	490	212	66
24084-B-K30-MB	**H24084**	214	48,6	**400**	420	620	200	5	550,2	12,5	23,5	490	274	66
23184-K-MB	**H3184**	339	85,1	**400**	420	700	224	6	605,4	12,5	23,5	540	304	89
24184-B-K30	**H24184**	407	87,8	**400**	420	700	280	6	590,3	12,5	23,5	540	372	89
22284-K-MB	**H3184**	404	85,1	**400**	420	760	195	7,5	661,8	12,5	23,5	540	304	89
23284-B-K-MB	**H3284**	539	95,3	**400**	420	760	272	7,5	642,2	12,5	23,5	540	352	89
23988-K-MB	**H3988**	98,3	59	**410**	440	600	118	4	552,8	12,5	23,5	520	189	75
23088-K-MB	**H3088**	177	67,7	**410**	440	650	157	6	586,8	12,5	23,5	520	228	75
24088-B-K30-MB	**H24088**	247	76,4	**410**	440	650	212	6	575,6	12,5	23,5	520	294	75

Mounting dimensions					Basic load ratings		Calculation factors				Fatigue limit load	Limiting speed	Reference speed
d_a	D_a	d_b	B_a	r_a	dyn. C_r	stat. C_{0r}	e	Y_1	Y_2	Y_0	C_{ur}	n_G	n_B
max.	max.	min.	min.	max.	kN	kN					kN	min^{-1}	min^{-1}
389	467,6	372	14	2,5	1 430	3 200	0,17	4,05	6,04	3,96	209	1 000	800
402	522	375	14	4	2 450	4 800	0,25	2,74	4,08	2,68	295	950	790
397	522	371	23	4	3 250	6 800	0,33	2,06	3,06	2,01	530	800	560
416	580	380	14	4	3 800	7 350	0,33	2,06	3,06	2,01	360	850	550
405	580	373	24	4	4 500	9 000	0,41	1,63	2,43	1,6	550	750	355
429	624	380	35	5	3 900	6 550	0,28	2,43	3,61	2,37	420	800	700
424	624	385	14	5	4 900	9 150	0,38	1,78	2,65	1,74	720	800	425
453	718	385	21	6	5 600	8 800	0,33	2,06	3,06	2,01	650	700	480
415	505,4	393	15	3	1 760	4 000	0,19	3,58	5,33	3,5	265	950	750
422	542	396	15	4	2 550	5 300	0,24	2,84	4,23	2,78	430	900	730
417	542	391	25	4	3 350	7 200	0,31	2,15	3,2	2,1	580	750	520
436	600	401	15	4	4 050	8 150	0,32	2,12	3,15	2,07	385	800	510
427	600	393	25	4	4 650	9 500	0,39	1,71	2,54	1,67	770	700	330
451	654	401	33	5	4 150	7 100	0,27	2,51	3,74	2,45	550	750	630
447	654	405	15	5	5 300	9 800	0,37	1,8	2,69	1,76	780	750	395
435	525,4	413	15	3	1 830	4 150	0,18	3,71	5,52	3,63	275	900	710
448	582	417	15	4	3 050	6 200	0,24	2,79	4,15	2,73	365	800	670
442	582	412	25	4	3 900	8 500	0,33	2,06	3,06	2,01	670	700	485
457	624	421	15	5	4 250	8 500	0,31	2,15	3,2	2,1	670	750	485
448	624	413	25	5	5 100	10 400	0,39	1,72	2,56	1,68	720	670	310
476	694	421	30	5	4 650	7 800	0,26	2,55	3,8	2,5	600	700	600
473	694	427	15	5	5 700	10 800	0,38	1,78	2,65	1,74	820	700	370
497	788	427	27	6	6 550	10 600	0,33	2,07	3,09	2,03	610	670	400
455	545,4	433	15	3	1 900	4 500	0,18	3,85	5,73	3,76	300	850	660
468	602	437	16	4	3 150	6 550	0,24	2,84	4,23	2,78	395	800	640
460	602	438	18	4	4 000	8 800	0,32	2,13	3,17	2,08	710	670	460
483	674	443	16	5	5 000	9 650	0,33	2,03	3,02	1,98	465	700	455
476	674	434	27	5	6 200	12 700	0,4	1,67	2,49	1,63	980	630	265
499	728	443	45	6	5 100	8 650	0,27	2,51	3,74	2,45	630	670	500
495	728	449	16	6	6 550	12 200	0,38	1,77	2,64	1,73	930	670	340
482	585,4	454	17	3	2 240	5 200	0,18	3,66	5,46	3,58	295	800	620
488	627	458	17	5	3 400	7 100	0,24	2,84	4,23	2,78	405	750	610
483	627	452	27	5	4 300	9 650	0,32	2,12	3,15	2,07	750	630	430

Spherical roller bearings

With adapter sleeve

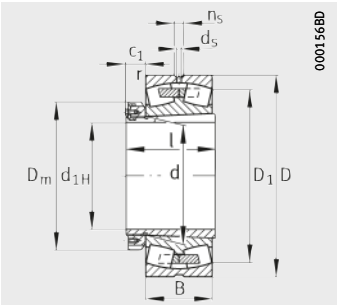

With central rib
Locknut with retaining bracket

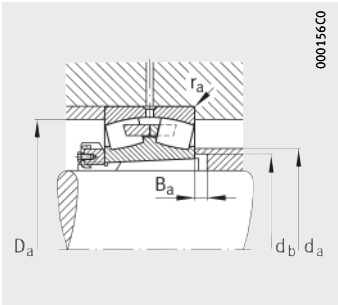

Mounting dimensions

Dimension table (continued) · Dimensions in mm

Designation		Mass m		Dimensions										
Bearing	Adapter sleeve	Bearing ≈kg	Adapter sleeve ≈kg	d_{1H}	d	D	B	r min.	D_1 ≈	d_s	n_s	D_m	l	c_1 ≈
23188-K-MB	**H3188**	378	105	**410**	440	720	226	6	626	12,5	23,5	560	307	89
24188-B-K30	**H24188**	451	111	**410**	440	720	280	6	612,4	12,5	23,5	560	372	89
22288-K-MB	**H3188**	440	105	**410**	440	790	200	7,5	689,5	12,5	23,5	560	307	89
23288-B-K-MB	**H3288**	586	120	**410**	440	790	280	7,5	669,3	12,5	23,5	560	361	89
23992-B-K-MB	**H3992**	103	61,4	**430**	460	620	118	4	573,3	12,5	23,5	540	189	75
23092-B-K-MB	**H3092**	212	71,8	**430**	460	680	163	6	612,2	12,5	23,5	540	234	75
24092-B-K30-MB	**H24092**	359	80,8	**430**	460	680	218	6	603,3	12,5	23,5	540	300	75
23192-K-MB	**H3192**	420	118	**430**	460	760	240	7,5	661,4	12,5	23,5	580	326	94
24192-B-K30-MB	**H24192**	578	124	**430**	460	760	300	7,5	642,8	12,5	23,5	580	398	94
23292-K-MB	**H3292**	699	134	**430**	460	830	296	7,5	701,6	12,5	23,5	580	382	94
23996-B-K-MB	**H3996**	121	66,8	**450**	480	650	128	5	598,8	12,5	23,5	560	200	75
23096-K-MB	**H3096**	208	75,9	**450**	480	700	165	6	632,6	12,5	23,5	560	237	75
24096-B-K30-MB	**H24096**	289	84,7	**450**	480	700	218	6	625,4	12,5	23,5	560	301	75
23196-K-MB	**H3196**	470	135	**450**	480	790	248	7,5	688,3	12,5	23,5	620	335	94
24196-B-K30-MB	**H24196**	628	142	**450**	480	790	308	7,5	669,9	12,5	23,5	620	408	94
23296-K-MB	**H3296**	806	155	**450**	480	870	310	7,5	734,8	12,5	23,5	620	397	94
239/500-K-MB	**H39/500**	124	75,2	**470**	500	670	128	5	619,3	12,5	23,5	580	208	83
230/500-B-K-MB	**H30/500**	219	85,2	**470**	500	720	167	6	653,5	12,5	23,5	580	247	83
240/500-B-K30-MB	**H240/500**	384	93,8	**470**	500	720	218	6	645,8	12,5	23,5	580	309	83
231/500-B-K-MB	**H31/500**	556	145	**470**	500	830	264	7,5	720,9	12,5	23,5	630	356	99
241/500-B-K30-MB	**H241/500**	738	151	**470**	500	830	325	7,5	701,8	12,5	23,5	630	430	99
232/500-K-MB	**H32/500**	984	170	**470**	500	920	336	7,5	773,8	12,5	23,5	630	428	99
239/530-K-MB	**H39/530**	146	89	**500**	530	710	136	5	656,5	12,5	23,5	630	216	89
230/530-K-MB	**H30/530**	291	103	**500**	530	780	185	6	703,7	12,5	23,5	630	265	89
240/530-B-K30-MB	**H240/530**	418	115	**500**	530	780	250	6	691,9	12,5	23,5	630	343	89
231/530-K-MB	**H31/530**	643	161	**500**	530	870	272	7,5	756,3	12,5	23,5	670	364	102
241/530-B-K30-MB	**H241/530**	856	167	**500**	530	870	335	7,5	739,1	12,5	23,5	670	440	102
232/530-K-MB	**H32/530**	1 200	192	**500**	530	980	355	9,5	824,4	12,5	23,5	670	447	102
239/560-B-K-MB	**H39/560**	169	95,6	**530**	560	750	140	5	693,4	12,5	23,5	650	227	96
230/560-B-K-MB	**H30/560**	339	112	**530**	560	820	195	6	741,5	12,5	23,5	650	282	96
240/560-B-K30-MB	**H240/560**	458	124	**530**	560	820	258	6	731,2	12,5	23,5	650	358	96
231/560-K-MB	**H31/560**	737	184	**530**	560	920	280	7,5	800,2	12,5	23,5	710	377	107
241/560-B-K30-MB	**H241/560**	974	195	**530**	560	920	355	7,5	785	12,5	23,5	710	468	107
232/560-K-MB	**H32/560**	1 360	218	**530**	560	1 030	365	9,5	868,1	12,5	23,5	710	462	107

Mounting dimensions					Basic load ratings		Calculation factors				Fatigue limit load	Limiting speed	Reference speed
d_a	D_a	d_b	B_a	r_a	dyn. C_r	stat. C_{0r}	e	Y_1	Y_2	Y_0	C_{ur}	n_G	n_B
max.	max.	min.	min.	max.	kN	kN					kN	min^{-1}	min^{-1}
504	694	463	17	5	5 200	10 400	0,32	2,1	3,13	2,06	485	700	425
494	694	454	27	5	6 400	13 200	0,38	1,76	2,62	1,72	1 020	600	255
520	758	463	42	6	5 400	9 300	0,27	2,51	3,74	2,45	680	630	530
516	758	469	17	6	7 100	13 400	0,37	1,8	2,69	1,76	990	630	320
500	605,4	474	17	3	2 280	5 400	0,18	3,85	5,73	3,76	370	750	590
509	657	478	17	5	3 650	7 650	0,24	2,84	4,23	2,78	440	700	580
505	657	472	27	5	4 750	10 600	0,31	2,16	3,22	2,12	710	630	400
533	728	484	17	6	5 850	11 600	0,32	2,12	3,15	2,07	530	630	390
517	728	475	28	6	7 500	15 600	0,39	1,73	2,58	1,69	1 160	560	227
541	798	490	17	6	7 800	15 000	0,37	1,8	2,69	1,76	620	600	295
523	632	496	18	4	2 550	6 000	0,18	3,76	5,59	3,67	460	700	570
529	677	499	18	5	3 800	8 150	0,23	2,9	4,31	2,83	455	670	550
525	677	492	28	5	4 900	11 200	0,3	2,25	3,34	2,2	830	600	380
554	758	505	18	6	6 300	12 700	0,32	2,12	3,15	2,07	570	630	370
544	758	495	29	6	8 000	16 600	0,39	1,75	2,61	1,71	1 190	560	213
568	838	512	18	6	8 800	17 000	0,37	1,83	2,72	1,79	700	600	265
543	652	516	18	4	2 600	6 300	0,17	3,9	5,81	3,81	400	670	540
550	697	519	18	5	3 900	8 500	0,22	3,01	4,48	2,94	510	670	520
545	697	516	28	5	4 900	11 200	0,29	2,32	3,45	2,26	850	560	360
578	798	527	18	6	7 100	14 300	0,32	2,1	3,13	2,06	990	600	340
563	798	516	29	6	8 650	18 300	0,39	1,73	2,58	1,69	1 340	530	199
593	888	534	18	6	9 650	18 300	0,38	1,78	2,65	1,74	750	560	260
576	692	546	18	4	2 850	6 800	0,18	3,85	5,73	3,76	385	630	500
589	757	550	18	5	4 400	9 500	0,22	3,04	4,53	2,97	540	600	490
581	757	544	29	5	6 000	13 700	0,31	2,15	3,2	2,1	910	530	340
609	838	558	18	6	7 350	15 300	0,32	2,12	3,15	2,07	670	560	325
593	838	546	29	6	9 500	20 000	0,38	1,77	2,64	1,73	1 450	500	180
630	940	565	18	8	10 800	20 800	0,38	1,77	2,64	1,73	1 200	530	240
609	732	577	18	4	3 100	7 650	0,17	3,95	5,88	3,86	570	600	465
619	797	581	18	5	5 100	11 000	0,23	2,95	4,4	2,89	740	560	450
613	797	573	29	5	6 400	14 600	0,31	2,2	3,27	2,15	1 050	500	320
644	888	589	18	6	8 150	16 600	0,31	2,21	3,29	2,16	750	530	300
634	888	577	32	6	10 600	22 400	0,38	1,77	2,64	1,73	1 600	480	167
663	990	596	17	8	11 600	22 400	0,38	1,78	2,65	1,74	910	500	220

Spherical roller bearings

With adapter sleeve

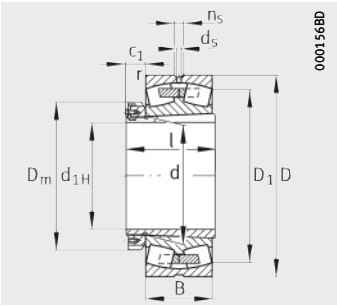

With central rib
Locknut with retaining bracket

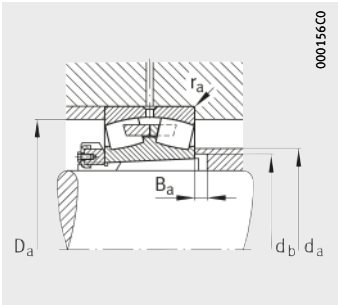

Mounting dimensions

Dimension table (continued) · Dimensions in mm

Designation		Mass m		Dimensions										
Bearing	Adapter sleeve	Bearing ≈kg	Adapter sleeve ≈kg	d_{1H}	d	D	B	r min.	D_1 ≈	d_s	n_s	D_m	l	c_1 ≈
239/600-B-K-MB	**H39/600**	210	129	**560**	600	800	150	5	740,5	12,5	23,5	700	239	96
230/600-B-K-MB	**H30/600**	388	149	**560**	600	870	200	6	791,9	12,5	23,5	700	289	96
240/600-B-K30-MB	**H240/600**	544	171	**560**	600	870	272	6	773,3	12,5	23,5	700	377	96
231/600-K-MB	**H31/600**	901	234	**560**	600	980	300	7,5	852,6	12,5	23,5	750	399	107
241/600-B-K30-MB	**H241/600**	1 170	249	**560**	600	980	375	7,5	833	12,5	23,5	750	490	107
232/600-B-K-MB	**H32/600**	1 560	279	**560**	600	1 090	388	9,5	919,5	12,5	23,5	750	487	107
239/630-B-K-MB	**H39/630**	283	123	**600**	630	850	165	6	784,5	12,5	23,5	730	254	96
230/630-B-K-MB	**H30/630**	480	139	**600**	630	920	212	7,5	834,3	12,5	23,5	730	301	96
240/630-B-K30-MB	**H240/630**	649	157	**600**	630	920	290	7,5	817,9	12,5	23,5	730	395	96
231/630-B-K-MB	**H31/630**	1 040	251	**600**	630	1 030	315	7,5	896,2	12,5	23,5	800	424	117
241/630-B-K30-MB	**H241/630**	1 360	263	**600**	630	1 030	400	7,5	872,2	12,5	23,5	800	525	117
232/630-B-K-MB	**H32/630**	1 885	297	**600**	630	1 150	412	12	969,2	12,5	23,5	800	521	117
239/670-B-K-MB	**H39/670**	310	166	**630**	670	900	170	6	831,5	12,5	23,5	780	264	101
230/670-B-K-MB	**H30/670**	590	194	**630**	670	980	230	7,5	888,7	12,5	23,5	780	324	101
240/670-B-K30-MB	**H240/670**	813	218	**630**	670	980	308	7,5	873,1	12,5	23,5	780	418	101
231/670-B-K-MB	**H31/670**	1 650	341	**630**	670	1 090	336	7,5	948,2	12,5	23,5	850	456	128
241/670-B-K30-MB	**H241/670**	1 540	355	**630**	670	1 090	412	7,5	929,4	12,5	23,5	850	548	128
232/670-B-K-MB	**H32/670**	2 240	402	**630**	670	1 220	438	12	1 030,5	12,5	23,5	850	558	128
239/710-K-MB	**H39/710**	336	200	**670**	710	950	180	6	877,5	12,5	23,5	830	286	111
230/710-B-K-MB	**H30/710**	650	228	**670**	710	1 030	236	7,5	938,8	12,5	23,5	830	342	111
240/710-B-K30-MB	**H240/710**	873	254	**670**	710	1 030	315	7,5	921,6	12,5	23,5	830	438	111
231/710-B-K-MB	**H31/710**	1 420	376	**670**	710	1 150	345	9,5	1 006,6	12,5	23,5	900	467	131
241/710-B-K30-MB	**H241/710**	1 790	397	**670**	710	1 150	438	9,5	980,2	12,5	23,5	900	577	131
232/710-B-K-MB	**H32/710**	2 550	444	**670**	710	1 280	450	12	1 088,4	12,5	23,5	900	572	131
239/750-K-MB	**H39/750**	394	213	**710**	750	1 000	185	6	923,2	12,5	23,5	870	291	111
249/750-B-K30-MB	**H249/750**	558	236	**710**	750	1 000	250	6	921,7	12,5	23,5	870	367	111
230/750-K-MB	**H30/750**	786	248	**710**	750	1 090	250	7,5	990,9	12,5	23,5	870	356	111
240/750-B-K30-MB	**H240/750**	1 070	278	**710**	750	1 090	335	7,5	976,2	12,5	23,5	870	460	111
231/750-B-K-MB	**H31/750**	1 670	432	**710**	750	1 220	365	9,5	1 067,4	12,5	23,5	950	493	137
241/750-B-K30-MB	**H241/750**	2 300	461	**710**	750	1 220	475	9,5	1 035,8	12,5	23,5	950	622	137
232/750-B-K-MB	**H32/750**	3 050	508	**710**	750	1 360	475	15	1 154,1	12,5	23,5	950	603	137
239/800-B-K-MB	**H39/800**	490	263	**750**	800	1 060	195	6	983,7	12,5	23,5	920	303	111
230/800-K-MB	**H30/800**	861	305	**750**	800	1 150	258	7,5	1 050,9	12,5	23,5	920	366	111
240/800-B-K30-MB	**H240/800**	1 190	349	**750**	800	1 150	345	7,5	1 034,1	12,5	23,5	920	475	111

Mounting dimensions					Basic load ratings		Calculation factors				Fatigue limit load	Limiting speed	Reference speed
d_a	D_a	d_b	B_a	r_a	dyn. C_r	stat. C_{0r}	e	Y_1	Y_2	Y_0	C_{ur}	n_G	n_B
max.	max.	min.	min.	max.	kN	kN					kN	min^{-1}	min^{-1}
653	782	618	20	4	3 450	8 650	0,17	3,95	5,88	3,86	630	560	430
661	847	622	20	5	5 700	12 500	0,22	3,07	4,57	3	890	530	405
655	847	614	34	5	7 100	16 600	0,31	2,21	3,29	2,16	1 200	630	285
693	948	629	20	6	9 000	19 300	0,31	2,2	3,27	2,15	810	500	270
678	948	617	34	6	11 600	26 000	0,38	1,79	2,67	1,75	1 780	450	149
708	1 050	638	19	8	12 900	25 500	0,37	1,83	2,72	1,79	1 740	480	190
688	827	649	20	5	4 050	9 800	0,18	3,8	5,66	3,72	710	530	405
696	892	653	20	6	6 300	13 700	0,22	3,01	4,48	2,94	890	500	380
690	892	658	22	6	8 000	19 000	0,31	2,21	3,29	2,16	1 350	480	260
726	998	662	20	6	9 800	20 800	0,31	2,21	3,29	2,16	1 430	480	260
710	998	649	34	6	12 900	29 000	0,38	1,78	2,65	1,74	1 960	450	136
730	1 102	670	20	10	14 300	28 500	0,37	1,8	2,69	1,76	1 370	450	180
730	877	689	20	5	4 300	10 600	0,17	3,95	5,88	3,86	750	500	375
741	952	694	20	6	7 200	16 000	0,22	3,01	4,48	2,94	1 100	480	350
736	952	686	34	6	9 000	21 600	0,31	2,2	3,27	2,15	1 460	450	240
772	1 058	704	20	6	11 000	24 000	0,31	2,21	3,29	2,16	1 560	450	220
757	1 058	689	34	6	14 000	31 500	0,37	1,83	2,72	1,79	2 110	430	127
788	1 172	714	19	10	16 300	32 500	0,37	1,8	2,69	1,76	2 150	430	160
770	927	730	22	5	4 800	12 000	0,18	3,85	5,73	3,76	720	480	350
785	1 002	735	23	6	7 650	17 000	0,22	3,07	4,57	3	1 140	480	325
780	1 002	725	38	6	9 500	22 800	0,3	2,26	3,37	2,21	1 550	430	223
813	1 110	745	23	8	12 500	27 000	0,3	2,25	3,34	2,2	1 810	450	200
799	1 110	730	38	8	15 600	35 500	0,38	1,79	2,67	1,75	2 340	400	116
843	1 232	754	21	10	17 300	35 500	0,37	1,83	2,72	1,79	2 300	430	150
810	977	771	23	5	5 200	12 900	0,17	3,95	5,88	3,86	790	480	325
804	977	765	32	5	7 200	19 000	0,22	3,1	4,62	3,03	1 180	430	–
828	1 062	776	23	6	8 500	19 000	0,22	3,01	4,48	2,94	1 010	450	305
826	1 062	768	40	6	10 800	26 000	0,3	2,26	3,37	2,21	1 730	400	204
853	1 180	786	23	8	14 000	30 500	0,29	2,3	3,42	2,25	1 990	430	190
845	1 180	772	40	8	18 000	40 500	0,38	1,76	2,62	1,72	2 600	300	110
893	1 302	796	21	12	19 300	40 000	0,37	1,83	2,72	1,79	2 550	400	140
865	1 037	822	25	5	5 850	15 000	0,17	4,05	6,04	3,96	1 010	450	295
879	1 122	828	25	6	9 300	21 200	0,22	3,07	4,57	3	1 430	430	280
880	1 122	818	45	6	11 600	28 500	0,29	2,33	3,47	2,28	1 810	360	190

Spherical roller bearings

With adapter sleeve

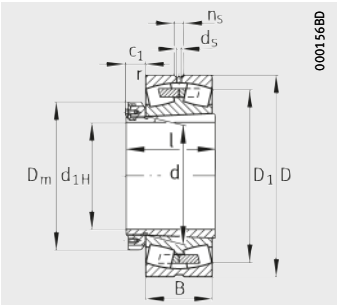

With central rib
Locknut with retaining bracket

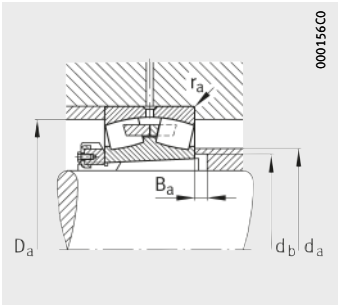

Mounting dimensions

Dimension table (continued) · Dimensions in mm

Designation		Mass m		Dimensions								
Bearing	Adapter sleeve	Bearing ≈kg	Adapter sleeve ≈kg	d_{1H}	d	D	B	r min.	D_1 ≈	d_s	n_s	D_m
231/800-K-MB	**H31/800**	2 400	515	**750**	800	1 280	375	9,5	1 119,1	12,5	23,5	1 000
241/800-B-K30-MB	**H241/800**	2 530	552	**750**	800	1 280	475	9,5	1 099,5	12,5	23,5	1 000
239/850-K-MB	**H39/850**	554	292	**800**	850	1 120	200	6	1 039,9	12,5	23,5	980
230/850-B-K-MB	**H30/850**	1 060	344	**800**	850	1 220	272	7,5	1 113,5	12,5	23,5	980
240/850-B-K30-MB	**H240/850**	1 420	393	**800**	850	1 220	365	7,5	1 092,9	12,5	23,5	980
231/850-B-K-MB	**H31/850**	2 340	590	**800**	850	1 360	400	12	1 198,1	12,5	23,5	1 060
241/850-B-K30-MB	**H241/850**	2 840	624	**800**	850	1 360	500	12	1 171,7	12,5	23,5	1 060
239/900-K-MB	**H39/900**	641	335	**850**	900	1 180	206	6	1 098,8	12,5	23,5	1 030
249/900-K30-MB	**H249/900**	854	364	**850**	900	1 180	280	6	1 088,6	12,5	23,5	1 030
230/900-B-K-MB	**H30/900**	1 280	392	**850**	900	1 280	280	7,5	1 171,3	12,5	23,5	1 030
240/900-B-K30-MB	**H240/900**	1 570	446	**850**	900	1 280	375	7,5	1 150,7	12,5	23,5	1 030
231/900-B-K-MB	**H31/900**	2 570	674	**850**	900	1 420	412	12	1 252,4	12,5	23,5	1 120
241/900-B-K30-MB	**H241/900**	3 040	712	**850**	900	1 420	515	12	1 230,4	12,5	23,5	1 120
239/950-B-K-MB	**H39/950**	746	369	**900**	950	1 250	224	7,5	1 162,5	12,5	23,5	1 080
230/950-B-K-MB	**H30/950**	1 420	432	**900**	950	1 360	300	7,5	1 244,7	12,5	23,5	1 080
240/950-B-K30-MB	**H240/950**	1 970	499	**900**	950	1 360	412	7,5	1 216	12,5	23,5	1 080
231/950-B-K-MB	**H31/950**	3 060	738	**900**	950	1 500	438	12	1 322,5	12,5	23,5	1 170
241/950-B-K30-MB	**H241/950**	3 820	776	**900**	950	1 500	545	12	1 306,7	12,5	23,5	1 170
230/1000-B-K-MB	**H30/1000**	1 590	474	**950**	1 000	1 420	308	7,5	1 300,3	12,5	23,5	1 140
240/1000-B-K30-MB	**H240/1000**	2 070	539	**950**	1 000	1 420	412	7,5	1 278,3	12,5	23,5	1 140
231/1000-K-MB	**H31/1000**	4 640	840	**950**	1 000	1 580	462	12	1 392,5	12,5	23,5	1 240
241/1000-B-K30-MB	**H241/1000**	4 380	886	**950**	1 000	1 580	580	12	1 372,6	12,5	23,5	1 240
239/1000-B-K-MB	**H39/1060**	1 080	493	**1 000**	1 060	1 400	250	7,5	1 307,6	12,5	23,5	1 200
230/1060-B-K-MB	**H30/1060**	1 920	574	**1 000**	1 060	1 500	325	9,5	1 374,4	12,5	23,5	1 200
240/1060-B-K30-MB	**H240/1060**	2 520	665	**1 000**	1 060	1 500	438	9,5	1 353,5	12,5	23,5	1 200
241/1060-B-K30-MB	**H241/1060**	5 000	1 060	**1 000**	1 060	1 660	600	15	–	12,5	23,5	1 300
248/1060-B-K30-MB	**H248/1060**	599	263	**1 020**	1 060	1 280	218	6	1 212,7	9,5	17,7	1 150
239/1120-B-K-MB	**H39/1120**	1 160	521	**1 060**	1 120	1 460	250	7,5	1 368,1	12,5	23,5	1 260
230/1120-B-K-MB	**H30/1120**	2 210	631	**1 060**	1 120	1 580	345	9,5	1 447,7	12,5	23,5	1 260
240/1120-B-K30-MB	**H240/1120**	2 920	728	**1 060**	1 120	1 580	462	9,5	1 429,7	12,5	23,5	1 260
241/1120-B-K30-MB	**H241/1120**	5 800	1 170	**1 060**	1 120	1 750	630	15	1 527,2	12,5	23,5	1 360
239/1180-B-K-MB	**H39/1180**	1 340	576	**1 120**	1 180	1 540	272	7,5	1 438,3	12,5	23,5	1 320
230/1180-B-K-MB	**H30/1180**	2 510	682	**1 120**	1 180	1 660	355	9,5	1 523,4	12,5	23,5	1 320
241/1180-B-K30-MB	**H241/1180**	7 040	1 290	**1 120**	1 180	1 850	670	15	1 603,9	12,5	23,5	1 420

		Mounting dimensions					Basic load ratings		Calculation factors				Fatigue limit load	Limiting speed	Reference speed
l	c_1	d_a	D_a	d_b	B_a	r_a	dyn. C_r	stat. C_{0r}	e	Y_1	Y_2	Y_0	C_{ur}	n_G	n_B
	≈	max.	max.	min.	min.	max.	kN	kN					kN	min^{-1}	min^{-1}
505	137	909	1 240	838	25	8	15 000	33 500	0,29	2,32	3,45	2,26	1 680	400	170
627	137	900	1 240	823	45	8	18 600	44 000	0,36	1,86	2,77	1,82	2 430	340	95
308	115	917	1 097	873	25	5	6 300	16 300	0,16	4,11	6,12	4,02	960	430	275
380	115	932	1 192	879	25	6	10 400	23 600	0,22	3,07	4,57	3	1 540	400	260
495	115	930	1 192	869	45	6	12 900	32 000	0,29	2,33	3,47	2,28	2 060	480	173
536	143	969	1 312	890	25	10	17 000	38 000	0,29	2,32	3,45	2,26	2 410	360	160
658	143	955	1 312	873	45	10	21 200	49 000	0,36	1,89	2,81	1,84	3 150	300	90
326	122	972	1 157	923	27	5	6 550	17 300	0,16	4,28	6,37	4,19	1 010	400	260
410	122	958	1 157	916	35	5	9 150	25 000	0,2	3,31	4,92	3,23	1 070	340	–
400	122	990	1 252	930	28	6	11 000	26 500	0,22	3,14	4,67	3,07	1 620	400	240
520	122	995	1 252	919	52	6	14 000	36 500	0,28	2,45	3,64	2,39	2 190	300	150
557	150	1 015	1 372	941	28	10	18 000	40 500	0,29	2,33	3,47	2,28	2 550	340	150
685	150	1 010	1 372	924	52	10	22 400	53 000	0,35	1,91	2,85	1,87	2 900	280	80
344	122	1 030	1 222	974	27	6	7 500	20 000	0,16	4,22	6,29	4,13	1 280	360	240
420	122	1 048	1 332	980	28	6	12 200	29 000	0,22	3,14	4,67	3,07	1 810	340	220
557	122	1 035	1 332	971	52	6	16 300	41 500	0,29	2,32	3,45	2,26	2 550	280	140
583	150	1 075	1 452	992	28	10	20 000	45 500	0,29	2,33	3,47	2,28	2 210	300	140
715	150	1 060	1 452	975	52	10	23 600	54 000	0,36	1,87	2,79	1,83	1 720	260	80
430	122	1 100	1 392	1 030	30	6	13 200	31 500	0,21	3,2	4,77	3,13	1 570	340	200
562	122	1 090	1 392	971	60	6	16 600	42 500	0,28	2,41	3,59	2,35	2 550	260	140
609	150	1 135	1 532	1 044	30	10	22 000	51 000	0,29	2,33	3,47	2,28	3 150	280	130
755	150	1 110	1 532	1 028	60	10	27 500	64 000	0,35	1,91	2,85	1,87	4 000	260	70
372	122	1 150	1 372	1 088	30	6	9 800	26 000	0,17	4,05	6,04	3,96	1 590	300	200
447	122	1 170	1 466	1 095	30	8	14 300	35 500	0,21	3,27	4,87	3,2	1 740	280	240
588	122	1 150	1 466	1 083	60	8	18 600	50 000	0,27	2,47	3,67	2,41	2 950	260	120
775	150	1 200	1 602	1 089	60	12	29 000	69 500	0,35	1,95	2,9	1,91	4 100	260	67
335	101	1 110	1 257	1 075	45	5	6 950	22 800	0,15	4,54	6,75	4,43	1 280	280	–
372	122	1 200	1 432	1 148	30	6	10 200	27 500	0,16	4,28	6,37	4,19	1 740	280	190
467	122	1 245	1 546	1 156	30	8	15 000	38 000	0,21	3,27	4,87	3,2	2 130	260	180
612	122	1 210	1 546	1 144	60	8	20 800	55 000	0,28	2,45	3,64	2,39	3 250	260	110
805	150	1 260	1 692	1 150	60	12	31 000	72 000	0,35	1,91	2,85	1,87	3 950	240	60
394	122	1 270	1 512	1 210	30	6	11 400	31 000	0,17	4,05	6,04	3,96	1 760	260	180
479	122	1 290	1 626	1 218	32	8	16 600	41 500	0,21	3,27	4,87	3,2	2 400	260	170
845	150	1 350	1 792	1 210	60	12	35 500	86 500	0,34	1,99	2,96	1,94	4 900	220	53

Spherical roller bearings

With adapter sleeve

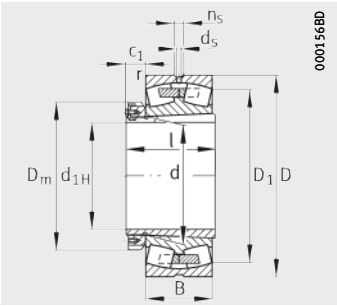

With central rib
Locknut with retaining bracket

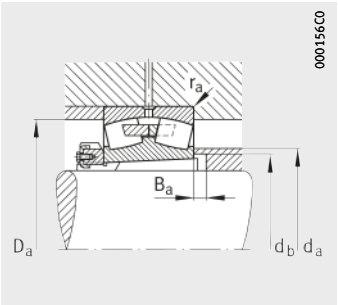

Mounting dimensions

Dimension table (continued) · Dimensions in mm

Designation		Mass m		Dimensions								
Bearing	Adapter sleeve	Bearing ≈kg	Adapter sleeve ≈kg	d_{1H}	d	D	B	r min.	D_1 ≈	d_s	n_s	D_m
239/1250-B-K-MB	**H39/1250**	1 630	708	**1 180**	1 250	1 630	280	7,5	1 516,1	12,5	23,5	1 390
230/1250-B-K-MB	**H30/1250**	2 920	858	**1 180**	1 250	1 750	375	9,5	1 607,6	12,5	23,5	1 390
240/1250-B-K30-MB	**H240/1250**	3 640	988	**1 180**	1 250	1 750	500	9,5	1 580,6	12,5	23,5	1 390
241/1250-B-K30-MB	**H241/1250**	8 000	1 540	**1 180**	1 250	1 950	710	15	–	12,5	23,5	1 490
239/1320-B-K-MB	**H39/1320**	1 950	781	**1 250**	1 320	1 720	300	7,5	1 602,2	12,5	23,5	1 460
239/1400-B-K-MB	**H39/1400**	2 200	924	**1 320**	1 400	1 820	315	9,5	1 695,6	12,5	23,5	1 540
240/1400-B-K30-MB	**H240/1400**	5 170	1 290	**1 320**	1 400	1 950	545	12	1 766,8	12,5	23,5	1 540
239/1500-B-K-MB	**H39/1500**	2 790	1 210	**1 400**	1 500	1 950	335	9,5	1 817,2	12,5	23,5	1 650
240/1500-B-K30-MB	**H240/1500**	3 350	1 790	**1 400**	1 500	2 120	615	12	1 905,3	12,5	23,5	1 650
231/1500-B-K-MB	**H31/1500**	5 530	2 230	**1 400**	1 500	2 300	600	19	2 060,4	12,5	23,5	1 740
241/1500-B-K30-MB	**H241/1500**	12 200	2 560	**1 400**	1 500	2 300	800	15	2 014	12,5	23,5	1 740
239/1600-B-K-MB	**H39/1600**	3 020	2 480	**1 500**	1 600	2 060	345	9,5	1 919,2	12,5	23,5	1 730
239/1700-B-K-MB	**H39/1700**	3 550	2 620	**1 600**	1 700	2 180	355	9,5	2 030,9	12,5	23,5	1 830

		Mounting dimensions					Basic load ratings		Calculation factors				Fatigue limit load	Limiting speed	Reference speed
l	c_1	d_a	D_a	d_b	B_a	r_a	dyn. C_r	stat. C_{0r}	e	Y_1	Y_2	Y_0	C_{ur}	n_G	n_B
	≈	max.	max.	min.	min.	max.	kN	kN					kN	min^{-1}	min^{-1}
407	132	1 345	1 602	1 210	35	8	12 000	32 500	0,15	4,47	6,65	4,37	1 970	260	160
509	132	1 380	1 716	1 290	34	8	18 000	46 500	0,2	3,34	4,98	3,27	2 700	260	150
660	132	1 370	1 716	1 275	60	8	23 200	62 000	0,25	2,69	4	2,63	3 600	240	–
885	150	1 425	1 892	1 282	60	12	37 500	91 500	0,34	1,99	2,96	1,94	5 100	220	50
430	132	1 425	1 692	1 353	30	6	13 700	39 000	0,16	4,28	6,37	4,19	2 190	260	150
445	132	1 510	1 786	1 434	30	8	14 600	42 500	0,16	4,28	6,37	4,19	2 390	240	140
705	132	1 520	1 908	1 427	60	10	28 000	76 500	0,24	2,76	4,11	2,7	4 450	220	80
465	132	1 625	1 916	1 536	30	8	16 300	49 000	0,16	4,28	6,37	4,19	2 550	220	130
775	132	1 660	2 078	1 529	60	10	34 000	93 000	0,26	2,64	3,93	2,58	5 400	200	–
755	155	1 700	2 242	1 560	35	12	40 000	96 500	0,25	2,67	3,97	2,61	5 600	220	67
990	155	1 705	2 242	1 536	75	12	45 000	110 000	0,32	2,1	3,13	2,06	5 900	220	50
465	122	1 725	2 026	1 638	30	8	17 300	52 000	0,15	4,6	6,85	4,5	2 850	220	120
475	122	1 810	2 146	1 740	30	8	19 300	60 000	0,15	4,6	6,85	4,5	–	220	110

Spherical roller bearings

With withdrawal sleeve

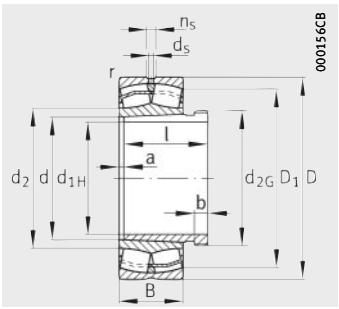

E1 design

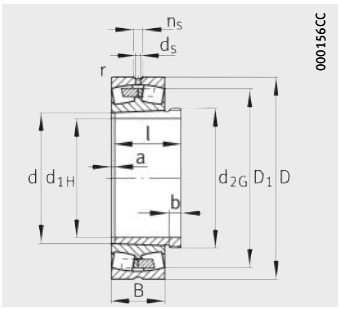

With central rib

Dimension table · Dimensions in mm

Designation			Mass m		Dimensions										
Bearing	X-life	Withdrawal sleeve	Bearing ≈kg	Withdrawal sleeve ≈kg	d_{1H}	d	D	B	r min.	D_1 ≈	d_2 ≈	d_s	n_s	a ≈	b
22330-E1-K	**XL**	**AHX2330G**	41,2	2,64	**145**	150	320	108	4	273,2	185,3	9,5	17,7	5	24
22330-E1-K-T41A	**XL**	**AHX2330G**	41,2	2,64	**145**	150	320	108	4	273,2	185,3	9,5	17,7	5	24
22332-K-MB	–	**AH2332G**	50,1	4,26	**150**	160	340	114	4	288,3	–	9,5	17,7	6	24
22334-K-MB	–	**AH2334G**	58,4	4,78	**160**	170	360	120	4	304,2	–	9,5	17,7	6	24
22236-E1-K	**XL**	**AH2236G**	28,5	3,35	**170**	180	320	86	4	285,9	211,3	9,5	17,7	5	17
23236-E1A-K-M	**XL**	**AH3236G**	37	4,8	**170**	180	320	112	4	277,3	–	8	15	6	25
22336-K-MB	–	**AH2336G**	66,7	5,42	**170**	180	380	126	4	323,4	–	12,5	23,5	6	26
23138-E1A-K-M	**XL**	**AH3138G**	32,4	4,39	**180**	190	320	104	3	281,6	–	8	15	6	20
24138-E1-K30[1]	**XL**	**AH24138**	39,5	4,37	**180**	190	320	128	2	269,7	217,5	6,3	12,2	13	18
22238-K-MB	–	**AH2238G**	36,2	3,83	**180**	190	340	92	4	296	–	9,5	17,7	5	18
23238-B-K-MB	–	**AH3238G**	46	5,3	**180**	190	340	120	4	291,2	–	9,5	17,7	7	25
22338-K-MB	–	**AH2338G**	77,3	6,02	**180**	190	400	132	5	338,2	–	12,5	23,5	7	26
23140-B-K-MB	–	**AH3140**	41,7	5,6	**190**	200	340	112	3	293,3	–	9,5	17,7	6	21
24140-B-K30	–	**AH24140**	51,6	5,02	**190**	200	340	140	3	285,9	–	6,3	12,2	13	18
22240-B-K-MB	–	**AH2240**	42,3	4,8	**190**	200	360	98	4	312	–	9,5	17,7	5	19
23240-B-K-MB	–	**AH3240**	55,8	6,61	**190**	200	360	128	4	307,5	–	9,5	17,7	7	24
22340-K-MB	–	**AH2340**	89,5	7,64	**190**	200	420	138	5	357,4	–	12,5	23,5	7	30
23044-K-MB	–	**AH3044G**	30,3	7,18	**200**	220	340	90	3	301,8	–	8	15	6	20
24044-B-K30-MB	–	**AH24044**	38,9	8,22	**200**	220	340	118	3	297,4	–	6,3	12,2	14	18
23144-B-K-MB	–	**AH3144**	52	10,4	**200**	220	370	120	4	319,2	–	9,5	17,7	6	23
24144-B-K30	–	**AH24144**	64,4	10,3	**200**	220	370	150	4	311,7	–	6,3	12,2	14	20
22244-B-K-MB	–	**AH2244**	59,6	9,17	**200**	220	400	108	4	348,7	–	9,5	17,7	6	20
23244-K-MB	–	**AH2344**	79	13,6	**200**	220	400	144	4	337,6	–	9,5	17,7	8	30
22344-K-MB	–	**AH2344**	114	13,6	**200**	220	460	145	5	391,2	–	12,5	23,5	8	30
23948-K-MB	–	**AH3948**	13,4	5,26	**220**	240	320	60	2,1	297,8	–	6,3	12,2	6	16
23048-K-MB	–	**AH3048**	31,9	8,92	**220**	240	360	92	3	322,1	–	8	15	7	21
24048-B-K30-MB	–	**AH24048**	43,2	9,03	**220**	240	360	118	3	318,9	–	6,3	12,2	15	20
23148-B-K-MB	–	**AH3148**	65,3	12,3	**220**	240	400	128	4	346,2	–	9,5	17,7	7	25
24148-B-K30	–	**AH24148**	78,7	12,6	**220**	240	400	160	4	338	–	6,3	12,2	15	20
22248-B-K-MB	–	**AH2248**	81,2	11,3	**220**	240	440	120	4	380,7	–	12,5	23,5	6	21
23248-B-K-MB	–	**AH2348**	105	15,6	**220**	240	440	160	4	371	–	12,5	23,5	8	30
22348-K-MB	–	**AH2348**	145	15,6	**220**	240	500	155	5	420	–	12,5	23,5	8	30
23952-K-MB	–	**AH3952G**	22,4	7,7	**240**	260	360	75	2,1	330,5	–	8	15	6	18
23052-K-MB	–	**AH3052**	46,2	10,8	**240**	260	400	104	4	357,2	–	9,5	17,7	7	23
24052-B-K30-MB	–	**AH24052**	64,5	11,6	**240**	260	400	140	4	349,1	–	6,3	12,2	16	20

[1] Cage guidance on inner ring central rib.

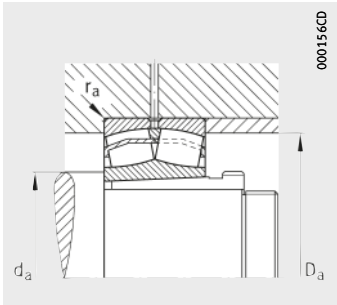

Mounting dimensions
E1 design

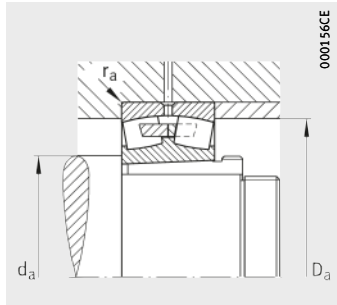

Mounting dimensions
With central rib

		Mounting dimensions			Basic load ratings		Calculation factors				Fatigue limit load	Limiting speed	Reference speed
Thread d_{2G}	l	d_a	D_a	r_a	dyn. C_r	stat. C_{0r}	e	Y_1	Y_2	Y_0	C_{ur}	n_G	n_B
≈	≈	min.	max.	max.	kN	kN					kN	min^{-1}	min^{-1}
M160X3	135	167	303	3	1 640	1 850	0,33	2,02	3	1,97	148	2 200	1 520
M160X3	135	167	303	3	1 640	1 850	0,33	2,02	3	1,97	148	2 200	1 520
M170X3	140	177	323	3	1 430	1 900	0,37	1,8	2,69	1,76	121	2 000	1 500
M180X3	146	187	343	3	1 600	2 120	0,37	1,83	2,72	1,79	134	1 800	1 380
M190X3	105	197	303	3	1 360	1 680	0,25	2,71	4,04	2,65	148	2 400	1 670
M190X3	140	197	303	3	1 710	2 340	0,33	2,07	3,09	2,03	173	2 000	1 090
M190X3	154	197	363	3	1 760	2 360	0,37	1,83	2,72	1,79	209	1 500	1 270
M200X3	125	204	306	2,5	1 610	2 220	0,3	2,28	3,39	2,23	218	2 000	1 260
M200X3	146	204	306	2,5	1 670	2 500	0,37	1,82	2,7	1,78	226	1 400	880
M200X3	112	207	323	3	1 200	1 830	0,28	2,39	3,56	2,34	122	1 800	1 600
M200X3	145	207	323	3	1 560	2 600	0,36	1,86	2,77	1,82	156	1 700	1 020
M200X3	160	210	380	4	1 860	2 500	0,37	1,83	2,72	1,79	213	1 500	1 220
Tr220X4	134	214	326	2,5	1 320	2 280	0,35	1,95	2,9	1,91	131	1 700	1 230
Tr210X4	158	214	326	2,5	1 700	3 000	0,42	1,62	2,42	1,59	190	1 400	810
Tr220X4	118	217	343	3	1 320	2 000	0,29	2,35	3,5	2,3	123	1 700	1 530
Tr220X4	153	217	343	3	1 660	2 750	0,37	1,83	2,72	1,79	163	1 500	980
Tr220X4	170	220	400	4	2 080	2 800	0,36	1,87	2,79	1,83	189	1 400	1 120
Tr230X4	111	232,4	327,6	2,5	1 100	2 000	0,26	2,55	3,8	2,5	132	1 700	1 440
Tr230X4	138	232,4	327,6	2,5	1 400	2 700	0,34	1,96	2,92	1,92	139	1 300	1 070
Tr240X4	145	237	353	3	1 630	2 900	0,33	2,03	3,02	1,98	165	1 400	1 060
Tr230X4	170	237	353	3	1 900	3 450	0,41	1,63	2,43	1,6	197	1 300	720
Tr240X4	130	237	383	3	1 630	2 450	0,29	2,35	3,5	2,3	153	1 400	1 300
Tr240X4	181	237	383	3	2 040	3 450	0,37	1,83	2,72	1,79	181	1 400	850
Tr240X4	181	240	440	4	2 320	3 350	0,35	1,95	2,9	1,91	217	1 300	970
Tr250X4	77	250,2	309,8	2,1	640	1 370	0,17	4,05	6,04	3,96	93	1 500	1 310
Tr260X4	116	252,4	347,6	2,5	1 160	2 200	0,25	2,74	4,08	2,68	130	1 400	1 310
Tr250X4	138	252,4	347,6	2,5	1 500	2 900	0,32	2,1	3,13	2,06	150	1 300	970
Tr260X4	154	257	383	3	1 860	3 250	0,33	2,06	3,06	2,01	177	1 300	970
Tr260X4	180	257	383	3	2 120	3 900	0,41	1,66	2,47	1,62	231	1 200	660
Tr260X4	144	257	423	3	1 960	3 050	0,29	2,35	3,5	2,3	184	1 300	1 180
Tr260X4	189	257	423	3	2 450	4 250	0,37	1,8	2,69	1,76	231	1 300	750
Tr260X4	189	260	480	4	2 650	3 900	0,35	1,95	2,9	1,91	249	1 500	870
Tr280X4	94	270,2	349,8	2,1	930	1 930	0,19	3,54	5,27	3,46	108	1 400	1 190
Tr280X4	128	274,6	385,4	3	1 500	2 800	0,26	2,64	3,93	2,58	155	1 300	1 160
Tr270X4	162	274,6	385,4	3	1 900	3 800	0,35	1,94	2,88	1,89	204	1 100	870

Spherical roller bearings

With withdrawal sleeve

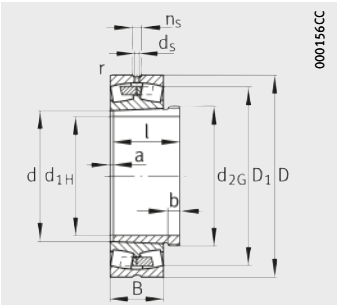

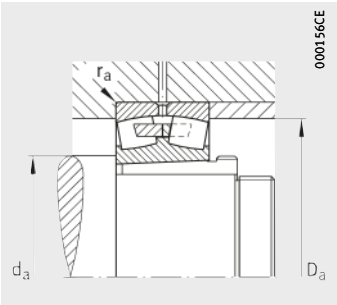

Mounting dimensions

Dimension table (continued) · Dimensions in mm

Designation		Mass m		Dimensions									
Bearing	Withdrawal sleeve	Bearing ≈kg	Withdrawal sleeve ≈kg	d_{1H}	d	D	B	r min.	D_1 ≈	d_s	n_s	a ≈	b
23152-K-MB	**AH3152G**	89,6	15,1	**240**	260	440	144	4	379,7	9,5	17,7	7	26
24152-B-K30	**AH24152**	112	15,5	**240**	260	440	180	4	370,3	8	15	16	22
22252-B-K-MB	**AH2252G**	106	13,3	**240**	260	480	130	5	415,3	12,5	23,5	6	23
23252-B-K-MB	**AH2352G**	136	18,7	**240**	260	480	174	5	405,4	12,5	23,5	8	30
22352-K-MB	**AH2352G**	177	18,7	**240**	260	540	165	6	452,1	12,5	23,5	8	30
23956-K-MB	**AH3956G**	24,7	8,3	**260**	280	380	75	2,1	350	8	15	6	18
23056-B-K-MB	**AH3056**	50,3	12	**260**	280	420	106	4	376,5	9,5	17,7	8	24
24056-B-K30-MB	**AH24056**	69,7	12,6	**260**	280	420	140	4	369,5	6,3	12,2	17	22
23156-B-K-MB	**AH3156G**	96,4	16,7	**260**	280	460	146	5	401,4	9,5	17,7	8	28
24156-B-K30	**AH24156**	118	16,7	**260**	280	460	180	5	392,8	8	15	17	22
22256-B-K-MB	**AH2256G**	110	14,4	**260**	280	500	130	5	435,2	12,5	23,5	8	24
23256-K-MB	**AH2356G**	153	20,9	**260**	280	500	176	5	426,3	12,5	23,5	8	30
22356-K-MB	**AH2356G**	224	20,9	**260**	280	580	175	6	489,3	12,5	23,5	8	30
23960-B-K-MB	**AH3960G**	39,1	10,8	**280**	300	420	90	3	384,6	9,5	17,7	7	21
23060-K-MB	**AH3060**	72,2	14,4	**280**	300	460	118	4	412,6	9,5	17,7	8	26
24060-B-K30-MB	**AH24060**	97,7	15,5	**280**	300	460	160	4	401,5	8	15	18	24
23160-B-K-MB	**AH3160G**	123	20	**280**	300	500	160	5	434,7	9,5	17,7	8	30
24160-B-K30	**AH24160**	158	20,1	**280**	300	500	200	5	424,4	8	15	18	24
22260-K-MB	**AH2260G**	136	17,2	**280**	300	540	140	5	468,8	12,5	23,5	8	26
23260-K-MB	**AH3260G**	192	24,6	**280**	300	540	192	5	458,7	12,5	23,5	8	34
22360-K-MB	**AH3260G**	365	24,6	**280**	300	620	185	7,5	523,6	12,5	23,5	8	34
23964-K-MB	**AH3964G**	41	11,4	**300**	320	440	90	3	406,2	9,5	17,7	7	21
23064-K-MB	**AH3064G**	77,1	15,8	**300**	320	480	121	4	432,6	9,5	17,7	8	27
24064-B-K30-MB	**AH24064**	103	17,5	**300**	320	480	160	4	424	8	15	18	24
23164-K-MB	**AH3164G**	167	23,6	**300**	320	540	176	5	466,2	12,5	23,5	8	31
24164-B-K30	**AH24164**	197	23,4	**300**	320	540	218	5	456,1	9,5	17,7	18	24
22264-K-MB	**AH2264G**	166	19,8	**300**	320	580	150	5	503,5	12,5	23,5	10	27
23264-K-MB	**AH3264G**	229	28,9	**300**	320	580	208	5	489,6	12,5	23,5	8	36
22364-B-K-MB	**AH3264G**	433	28,9	**300**	320	670	200	7,5	568,1	12,5	23,5	8	36
23068-K-MB	**AH3068G**	101	18,6	**320**	340	520	133	5	464,6	12,5	23,5	9	28
24068-B-K30-MB	**AH24068**	143	21,1	**320**	340	520	180	5	457,1	9,5	17,7	19	26
23168-B-K-MB	**AH3168G**	203	27,6	**320**	340	580	190	5	499,5	12,5	23,5	9	33
24168-B-K30	**AH24168**	260	28	**320**	340	580	243	5	481,1	9,5	17,7	19	26
23268-B-K-MB	**AH3268G**	291	33,7	**320**	340	620	224	6	521,2	12,5	23,5	9	38

		Mounting dimensions			Basic load ratings		Calculation factors				Fatigue limit load	Limiting speed	Reference speed
Thread d_{2G}	l	d_a	D_a	r_a	dyn. C_r	stat. C_{0r}	e	Y_1	Y_2	Y_0	C_{ur}	n_G	n_B
≈	≈	min.	max.	max.	kN	kN					kN	min^{-1}	min^{-1}
Tr280X4	172	277	423	3	2 200	4 000	0,33	2,03	3,02	1,98	213	1 200	850
Tr280X4	202	277	423	3	2 700	5 100	0,42	1,61	2,4	1,58	315	1 100	550
Tr280X4	155	280	460	4	2 240	3 450	0,29	2,32	3,45	2,26	217	1 100	1 070
Tr280X4	205	280	460	4	2 900	4 900	0,37	1,8	2,69	1,76	270	1 100	660
Tr280X4	205	286	514	5	3 000	4 400	0,34	2	2,98	1,96	290	1 100	790
Tr300X4	94	290,2	369,8	2,1	970	2 040	0,18	3,76	5,59	3,67	129	1 300	1 100
Tr300X4	131	294,6	405,4	3	1 560	3 000	0,25	2,74	4,08	2,68	156	1 300	1 090
Tr290X4	162	294,6	405,4	3	2 000	4 000	0,33	2,04	3,04	2	225	1 100	810
Tr300X4	175	300	440	4	2 360	4 400	0,32	2,12	3,15	2,07	241	1 100	780
Tr300X4	202	300	440	4	2 700	5 200	0,39	1,71	2,54	1,67	365	1 000	520
Tr300X4	155	300	480	4	2 360	3 650	0,28	2,43	3,61	2,37	238	1 100	1 010
Tr300X4	212	300	480	4	3 000	5 300	0,36	1,86	2,77	1,82	260	1 100	620
Tr300X4	212	306	554	5	3 550	5 400	0,33	2,03	3,02	1,98	335	950	680
Tr320X5	112	312,4	407,6	2,5	1 270	2 650	0,2	3,42	5,09	3,34	165	1 190	1 000
Tr320X5	145	314,6	445,4	3	1 960	3 650	0,25	2,69	4	2,63	223	1 100	960
Tr310X4	184	314,6	445,4	3	2 500	5 200	0,35	1,95	2,9	1,91	300	1 000	700
Tr320X5	192	320	480	4	2 650	4 900	0,33	2,06	3,06	2,01	270	1 100	720
Tr320X5	224	320	480	4	3 250	6 300	0,4	1,67	2,49	1,63	540	900	455
Tr320X5	170	320	520	4	2 750	4 400	0,27	2,47	3,67	2,41	300	1 000	900
Tr320X5	228	320	520	4	3 450	6 200	0,37	1,83	2,72	1,79	300	1 000	560
Tr320X5	228	332	588	6	4 000	6 100	0,33	2,06	3,06	2,01	375	900	630
Tr340X5	112	332,4	427,6	2,5	1 310	2 750	0,19	3,62	5,39	3,54	202	1 100	930
Tr340X5	149	334,6	465,4	3	2 040	4 000	0,25	2,74	4,08	2,68	243	1 100	900
Tr340X5	184	334,6	465,4	3	2 600	5 400	0,33	2,06	3,06	2,01	360	950	660
Tr340X5	209	340	520	4	3 200	6 000	0,34	1,98	2,94	1,93	305	950	650
Tr340X5	242	340	520	4	3 800	7 350	0,41	1,65	2,46	1,61	530	850	415
Tr340X5	180	340	560	4	3 050	4 900	0,27	2,47	3,67	2,41	345	950	830
Tr340X5	246	340	560	4	3 900	6 950	0,37	1,8	2,69	1,76	330	950	510
Tr340X5	246	352	638	6	4 400	6 800	0,33	2,06	3,06	2,01	540	800	560
Tr360X5	162	358	502	4	2 360	4 550	0,25	2,69	4	2,63	285	1 000	840
Tr360X5	206	358	502	4	3 100	6 550	0,34	1,98	2,94	1,93	530	850	600
Tr360X5	225	360	560	4	3 650	6 950	0,34	1,98	2,94	1,93	570	900	590
Tr360X5	269	360	560	4	4 400	8 500	0,43	1,56	2,32	1,53	680	800	380
Tr360X5	264	366	594	5	4 500	8 150	0,38	1,78	2,65	1,74	650	850	465

Spherical roller bearings

With withdrawal sleeve

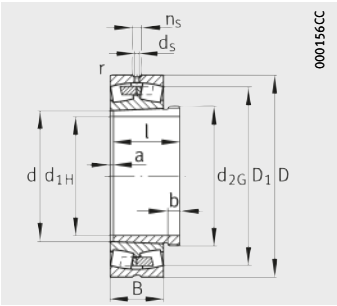

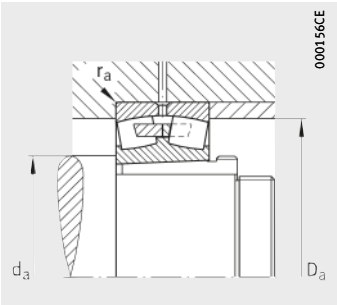

Mounting dimensions

Dimension table (continued) · Dimensions in mm

Designation		Mass m		Dimensions									
Bearing	Withdrawal sleeve	Bearing ≈kg	Withdrawal sleeve ≈kg	d_{1H}	d	D	B	r min.	D_1 ≈	d_s	n_s	a ≈	b
23972-K-MB	**AH3972G**	45	12,8	**340**	360	480	90	3	447,1	9,5	17,7	7	21
23072-K-MB	**AH3072G**	107	20,4	**340**	360	540	134	5	485,2	12,5	23,5	9	30
24072-B-K30-MB	**AH24072**	147	22,3	**340**	360	540	180	5	478,5	9,5	17,7	20	26
23172-K-MB	**AH3172G**	217	29,9	**340**	360	600	192	5	520	12,5	23,5	9	35
24172-B-K30	**AH24172**	275	29,7	**340**	360	600	243	5	503,6	9,5	17,7	20	26
23272-B-K-MB	**AH3272G**	328	37,5	**340**	360	650	232	6	548,3	12,5	23,5	9	40
22372-K-MB	**AH3272G**	625	37,5	**340**	360	750	224	7,5	634,9	12,5	23,5	9	40
23976-K-MB	**AH3976G**	66,3	16	**360**	380	520	106	4	477,6	9,5	17,7	8	22
23076-B-K-MB	**AH3076G**	115	22,1	**360**	380	560	135	5	505,6	12,5	23,5	10	31
24076-B-K30-MB	**AH24076**	155	24	**360**	380	560	180	5	499	9,5	17,7	20	28
23176-K-MB	**AH3176G**	226	32	**360**	380	620	194	5	539,6	12,5	23,5	10	36
24176-B-K30	**AH24176**	277	31,8	**360**	380	620	243	5	525,8	9,5	17,7	20	28
22276-K-MB	**AH3176**	284	32	**360**	380	680	175	6	592,6	12,5	23,5	10	36
23276-B-K-MB	**AH3276G**	367	41,5	**360**	380	680	240	6	576,4	12,5	23,5	10	42
23980-B-K-MB	**AH3980G**	68,2	16,9	**380**	400	540	106	4	499	9,5	17,7	8	22
23080-K-MB	**AH3080G**	143	25,4	**380**	400	600	148	5	540,5	12,5	23,5	10	33
24080-B-K30-MB	**AH24080**	196	27,8	**380**	400	600	200	5	530,9	12,5	23,5	20	28
23180-B-K-MB	**AH3180G**	261	35,1	**380**	400	650	200	6	567,2	12,5	23,5	10	38
24180-B-K30	**AH24180**	312	34,4	**380**	400	650	250	6	553,5	12,5	23,5	20	28
22280-K-MB	**AH3180**	414	35,1	**380**	400	720	185	6	629,3	12,5	23,5	10	38
23280-B-K-MB	**AH3280G**	442	47,4	**380**	400	720	256	6	609,8	12,5	23,5	10	44
22380-K-MB	**AH3280G**	800	47,4	**380**	400	820	243	7,5	694,4	12,5	23,5	10	44
23984-K-MB	**AH3984G**	78	17,8	**400**	420	560	106	4	519,5	9,5	17,7	8	22
23084-B-K-MB	**AH3084G**	155	27,2	**400**	420	620	150	5	560,7	12,5	23,5	10	34
24084-B-K30-MB	**AH24084**	214	29,6	**400**	420	620	200	5	550,2	12,5	23,5	22	30
23184-K-MB	**AH3184G**	339	42	**400**	420	700	224	6	605,4	12,5	23,5	10	40
24184-B-K30	**AH24184**	407	41	**400**	420	700	280	6	590,3	12,5	23,5	22	30
22284-K-MB	**AH3184**	404	42	**400**	420	760	195	7,5	661,8	12,5	23,5	10	40
23284-B-K-MB	**AH3284G**	539	54	**400**	420	760	272	7,5	642,2	12,5	23,5	10	46
23988-K-MB	**AH3988**	98,3	21,2	**420**	440	600	118	4	552,8	12,5	23,5	8	25
23088-K-MB	**AHX3088G**	177	30,1	**420**	440	650	157	6	586,8	12,5	23,5	11	35
24088-B-K30-MB	**AH24088**	247	32,8	**420**	440	650	212	6	575,6	12,5	23,5	22	30
23188-K-MB	**AHX3188G**	378	45,3	**420**	440	720	226	6	626	12,5	23,5	11	42
24188-B-K30	**AH24188**	451	42,9	**420**	440	720	280	6	612,4	12,5	23,5	22	30
22288-K-MB	**AHX3188-H**	440	49,7	**420**	440	790	200	7,5	689,5	12,5	23,5	11	42
23288-B-K-MB	**AHX3288G**	586	58,8	**420**	440	790	280	7,5	669,3	12,5	23,5	11	48

		Mounting dimensions			Basic load ratings		Calculation factors				Fatigue limit load	Limiting speed	Reference speed
Thread d_{2G}	l	d_a	D_a	r_a	dyn. C_r	stat. C_{0r}	e	Y_1	Y_2	Y_0	C_{ur}	n_G	n_B
≈	≈	min.	max.	max.	kN	kN					kN	min^{-1}	min^{-1}
Tr380X5	112	372,4	467,6	2,5	1 430	3 200	0,17	4,05	6,04	3,96	209	1 000	800
Tr380X5	167	378	522	4	2 450	4 800	0,25	2,74	4,08	2,68	295	950	790
Tr380X5	206	378	522	4	3 250	6 800	0,33	2,06	3,06	2,01	530	800	560
Tr380X5	229	380	580	4	3 800	7 350	0,33	2,06	3,06	2,01	360	850	550
Tr380X5	269	380	580	4	4 500	9 000	0,41	1,63	2,43	1,6	550	750	355
Tr380X5	274	386	624	5	4 900	9 150	0,38	1,78	2,65	1,74	720	800	425
Tr380X5	274	392	718	6	5 600	8 800	0,33	2,06	3,06	2,01	650	700	480
Tr400X5	130	394,6	505,4	3	1 760	4 000	0,19	3,58	5,33	3,5	265	950	750
Tr400X5	170	398	542	4	2 550	5 300	0,24	2,84	4,23	2,78	430	900	730
Tr400X5	208	398	542	4	3 350	7 200	0,31	2,15	3,2	2,1	580	750	520
Tr400X5	232	400	600	4	4 050	8 150	0,32	2,12	3,15	2,07	385	800	510
Tr400X5	271	400	600	4	4 650	9 500	0,39	1,71	2,54	1,67	770	700	330
Tr400X5	232	406	654	5	4 150	7 100	0,27	2,51	3,74	2,45	550	750	630
Tr400X5	284	406	654	5	5 300	9 800	0,37	1,8	2,69	1,76	780	750	395
Tr420X5	130	414,6	525,4	3	1 830	4 150	0,18	3,71	5,52	3,63	275	900	710
Tr420X5	183	418	582	4	3 050	6 200	0,24	2,79	4,15	2,73	365	800	670
Tr420X5	228	418	582	4	3 900	8 500	0,33	2,06	3,06	2,01	670	700	485
Tr420X5	240	426	624	5	4 250	8 500	0,31	2,15	3,2	2,1	670	750	485
Tr420X5	278	426	624	5	5 100	10 400	0,39	1,72	2,56	1,68	720	670	310
Tr420X5	240	426	694	5	4 650	7 800	0,26	2,55	3,8	2,5	600	700	600
Tr420X5	302	426	694	5	5 700	10 800	0,38	1,78	2,65	1,74	820	700	370
Tr420X5	302	432	788	6	6 550	10 600	0,33	2,07	3,09	2,03	610	670	400
Tr440X5	130	434,6	545,4	3	1 900	4 500	0,18	3,85	5,73	3,76	300	850	660
Tr440X5	186	438	602	4	3 150	6 550	0,24	2,84	4,23	2,78	395	800	640
Tr440X5	230	438	602	4	4 000	8 800	0,32	2,13	3,17	2,08	710	670	460
Tr440X5	266	446	674	5	5 000	9 650	0,33	2,03	3,02	1,98	465	700	455
Tr440X5	310	446	674	5	6 200	12 700	0,4	1,67	2,49	1,63	980	630	265
Tr440X5	266	452	728	6	5 100	8 650	0,27	2,51	3,74	2,45	630	670	500
Tr440X5	321	452	728	6	6 550	12 200	0,38	1,77	2,64	1,73	930	670	340
Tr460X5	145	454,6	585,4	3	2 240	5 200	0,18	3,66	5,46	3,58	295	800	620
Tr460X5	194	463	627	5	3 400	7 100	0,24	2,84	4,23	2,78	405	750	610
Tr460X5	242	463	627	5	4 300	9 650	0,32	2,12	3,15	2,07	750	630	430
Tr460X5	270	466	694	5	5 200	10 400	0,32	2,1	3,13	2,06	485	700	425
Tr460X5	310	466	694	5	6 400	13 200	0,38	1,76	2,62	1,72	1 020	600	255
Tr480X5	270	472	758	6	5 400	9 300	0,27	2,51	3,74	2,45	680	630	530
Tr480X5	330	472	758	6	7 100	13 400	0,37	1,8	2,69	1,76	990	630	320

Spherical roller bearings

With withdrawal sleeve

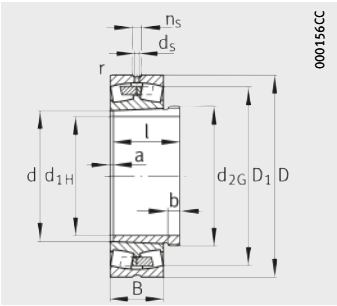

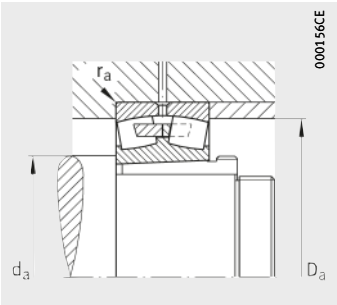

Mounting dimensions

Dimension table (continued) · Dimensions in mm

Designation		Mass m		Dimensions									
Bearing	Withdrawal sleeve	Bearing ≈kg	Withdrawal sleeve ≈kg	d_{1H}	d	D	B	r min.	D_1 ≈	d_s	n_s	a ≈	b
23992-B-K-MB	**AH3992**	103	22,2	**440**	460	620	118	4	573,3	12,5	23,5	8	25
23092-B-K-MB	**AHX3092G**	212	33,1	**440**	460	680	163	6	612,2	12,5	23,5	11	37
24092-B-K30-MB	**AH24092**	359	35,6	**440**	460	680	218	6	603,3	12,5	23,5	23	32
23192-K-MB	**AHX3192G**	420	50,8	**440**	460	760	240	7,5	661,4	12,5	23,5	11	43
24192-B-K30-MB	**AH24192**	578	48,7	**440**	460	760	300	7,5	642,8	12,5	23,5	23	32
23292-K-MB	**AHX3292G**	699	66,2	**440**	460	830	296	7,5	701,6	12,5	23,5	11	50
23996-B-K-MB	**AH3996**	121	25,7	**460**	480	650	128	5	598,8	12,5	23,5	9	28
23096-K-MB	**AHX3096G**	208	35,2	**460**	480	700	165	6	632,6	12,5	23,5	12	38
24096-B-K30-MB	**AH24096**	289	37,2	**460**	480	700	218	6	625,4	12,5	23,5	23	32
23196-K-MB	**AHX3196G**	470	55,5	**460**	480	790	248	7,5	688,3	12,5	23,5	12	45
24196-B-K30-MB	**AH24196**	628	52,2	**460**	480	790	308	7,5	669,9	12,5	23,5	23	32
23296-K-MB	**AHX3296G**	806	73,3	**460**	480	870	310	7,5	734,8	12,5	23,5	12	52
239/500-K-MB	**AH39/500**	124	29,6	**480**	500	670	128	5	619,3	12,5	23,5	10	32
230/500-B-K-MB	**AHX30/500G**	219	40	**480**	500	720	167	6	653,5	12,5	23,5	12	40
240/500-B-K30-MB	**AH240/500**	384	41,7	**480**	500	720	218	6	645,8	12,5	23,5	23	35
231/500-B-K-MB	**AHX31/500**	556	65,3	**480**	500	830	264	7,5	720,9	12,5	23,5	12	47
241/500-B-K30-MB	**AH241/500**	738	60,5	**480**	500	830	325	7,5	701,8	12,5	23,5	23	35
232/500-K-MB	**AHX32/500G**	984	88,1	**480**	500	920	336	7,5	773,8	12,5	23,5	12	54
239/530-K-MB	**AH39/530**	146	45,3	**500**	530	710	136	5	656,5	12,5	23,5	10	37
230/530-K-MB	**AH30/530A**	291	61,7	**500**	530	780	185	6	703,7	12,5	23,5	12	45
240/530-B-K30-MB	**AH240/530**	418	67,5	**500**	530	780	250	6	691,9	12,5	23,5	24	35
231/530-K-MB	**AH31/530A**	643	92,3	**500**	530	870	272	7,5	756,3	12,5	23,5	12	53
241/530-B-K30-MB	**AH241/530**	845	89	**500**	530	870	335	7,5	739,1	12,5	23,5	24	35
232/530-K-MB	**AH32/530AG**	1 200	125	**500**	530	980	355	9,5	824,4	12,5	23,5	12	57
239/560-B-K-MB	**AH39/560**	169	52,1	**530**	560	750	140	5	693,4	12,5	23,5	10	37
230/560-B-K-MB	**AH30/560A**	339	71,8	**530**	560	820	195	6	741,5	12,5	23,5	12	45
240/560-B-K30-MB	**AH240/560**	458	77,5	**530**	560	820	258	6	731,2	12,5	23,5	24	38
231/560-K-MB	**AH31/560A**	737	106	**530**	560	920	280	7,5	800,2	12,5	23,5	12	55
241/560-B-K30-MB	**AH241/560**	974	104	**530**	560	920	355	7,5	785	12,5	23,5	24	38
232/560-K-MB	**AH32/560AG**	1 360	140	**530**	560	1 030	365	9,5	868,1	12,5	23,5	12	57
239/600-B-K-MB	**AH39/600**	210	57	**570**	600	800	150	5	740,5	12,5	23,5	10	38
230/600-B-K-MB	**AH30/600A**	388	75	**570**	600	870	200	6	791,9	12,5	23,5	14	45
240/600-B-K30-MB	**AH240/600**	544	84,1	**570**	600	870	272	6	773,3	12,5	23,5	26	38
231/600-K-MB	**AH31/600A**	901	116	**570**	600	980	300	7,5	852,6	12,5	23,5	14	55
241/600-B-K30-MB	**AH241/600**	1 170	114	**570**	600	980	375	7,5	833	12,5	23,5	26	38
232/600-B-K-MB	**AH32/600AG**	1 560	157	**570**	600	1 090	388	9,5	919,5	12,5	23,5	14	57

		Mounting dimensions			Basic load ratings		Calculation factors				Fatigue limit load	Limiting speed	Reference speed
Thread d_{2G}	l	d_a	D_a	r_a	dyn. C_r	stat. C_{0r}	e	Y_1	Y_2	Y_0	C_{ur}	n_G	n_B
≈	≈	min.	max.	max.	kN	kN					kN	min^{-1}	min^{-1}
Tr480X5	145	474,6	605,4	3	2 280	5 400	0,18	3,85	5,73	3,76	370	750	590
Tr480X5	202	483	657	5	3 650	7 650	0,24	2,84	4,23	2,78	440	700	580
Tr480X5	250	483	657	5	4 750	10 600	0,31	2,16	3,22	2,12	710	630	400
Tr480X5	285	492	728	6	5 850	11 600	0,32	2,12	3,15	2,07	530	630	390
Tr480X5	332	492	728	6	7 500	15 600	0,39	1,73	2,58	1,69	1 160	560	227
Tr480X5	349	492	798	6	7 800	15 000	0,37	1,8	2,69	1,76	620	600	295
Tr500X5	158	498	632	4	2 550	6 000	0,18	3,76	5,59	3,67	460	700	570
Tr500X5	205	503	677	5	3 800	8 150	0,23	2,9	4,31	2,83	455	670	550
Tr500X5	250	503	677	5	4 900	11 200	0,3	2,25	3,34	2,2	830	600	380
Tr500X5	295	512	758	6	6 300	12 700	0,32	2,12	3,15	2,07	570	630	370
Tr500X5	340	512	758	6	8 000	16 600	0,39	1,75	2,61	1,71	1 190	560	213
Tr500X5	364	512	838	6	8 800	17 000	0,37	1,83	2,72	1,79	700	600	265
Tr530X6	162	518	652	4	2 600	6 300	0,17	3,9	5,81	3,81	400	670	540
Tr530X6	209	523	697	5	3 900	8 500	0,22	3,01	4,48	2,94	510	670	520
Tr530X6	253	523	697	5	4 900	11 200	0,29	2,32	3,45	2,26	850	560	360
Tr530X6	313	532	798	6	7 100	14 300	0,32	2,1	3,13	2,06	990	600	340
Tr530X6	360	532	798	6	8 650	18 300	0,39	1,73	2,58	1,69	1 340	530	199
Tr530X6	393	532	888	6	9 650	18 300	0,38	1,78	2,65	1,74	750	560	260
Tr560X6	175	548	692	4	2 850	6 800	0,18	3,85	5,73	3,76	385	630	500
Tr560X6	230	553	757	5	4 400	9 500	0,22	3,04	4,53	2,97	540	600	490
Tr560X6	285	553	757	5	6 000	13 700	0,31	2,15	3,2	2,1	910	530	340
Tr560X6	325	562	838	6	7 350	15 300	0,32	2,12	3,15	2,07	670	560	325
Tr560X6	370	562	838	6	9 500	20 000	0,38	1,77	2,64	1,73	1 450	500	184
Tr580X6	412	570	940	8	10 800	20 800	0,38	1,77	2,64	1,73	1 200	530	240
Tr600X6	180	578	732	4	3 100	7 650	0,17	3,95	5,88	3,86	570	600	465
Tr600X6	240	583	797	5	5 100	11 000	0,23	2,95	4,4	2,89	740	560	450
Tr600X6	296	583	797	5	6 400	14 600	0,31	2,2	3,27	2,15	1 050	500	320
Tr600X6	335	592	888	6	8 150	16 600	0,31	2,21	3,29	2,16	750	530	300
Tr600X6	393	592	888	6	10 600	22 400	0,38	1,77	2,64	1,73	1 600	480	167
Tr600X6	422	600	990	8	11 600	22 400	0,38	1,78	2,65	1,74	910	500	220
Tr630X6	192	618	782	4	3 450	8 650	0,17	3,95	5,88	3,86	630	560	430
Tr630X6	245	623	847	5	5 700	12 500	0,22	3,07	4,57	3	890	530	405
Tr630X6	310	623	847	5	7 100	16 600	0,31	2,21	3,29	2,16	1 200	630	285
Tr630X6	355	632	948	6	9 000	19 300	0,31	2,2	3,27	2,15	810	500	270
Tr630X6	413	632	948	6	11 600	26 000	0,38	1,79	2,67	1,75	1 780	450	149
Tr630X6	445	640	1 050	8	12 900	25 500	0,37	1,83	2,72	1,79	1 740	480	190

Spherical roller bearings

With withdrawal sleeve

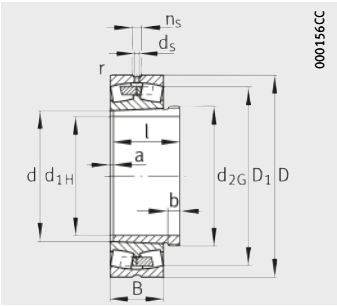

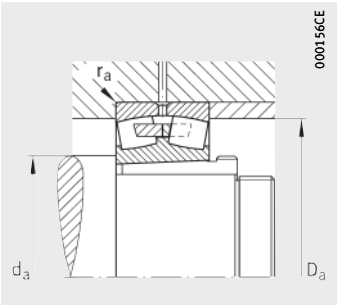

Mounting dimensions

Dimension table (continued) · Dimensions in mm

Designation		Mass m		Dimensions									
Bearing	Withdrawal sleeve	Bearing ≈kg	Withdrawal sleeve ≈kg	d_{1H}	d	D	B	r min.	D_1 ≈	d_s	n_s	a ≈	b
239/630-B-K-MB	**AH39/630**	283	69,4	**600**	630	850	165	6	784,5	12,5	23,5	12	40
230/630-B-K-MB	**AH30/630A**	480	87,3	**600**	630	920	212	7,5	834,3	12,5	23,5	14	46
240/630-B-K30-MB	**AH240/630**	649	97,9	**600**	630	920	290	7,5	817,9	12,5	23,5	26	40
231/630-B-K-MB	**AH31/630A**	1 040	136	**600**	630	1 030	315	7,5	896,2	12,5	23,5	14	60
241/630-B-K30-MB	**AH241/630**	1 360	133	**600**	630	1 030	400	7,5	872,2	12,5	23,5	26	40
232/630-B-K-MB	**AH32/630AG**	1 885	185	**600**	630	1 150	412	12	969,2	12,5	23,5	14	63
239/670-B-K-MB	**AH39/670**	310	92,9	**630**	670	900	170	6	831,5	12,5	23,5	12	41
230/670-B-K-MB	**AH30/670A**	590	124	**630**	670	980	230	7,5	888,7	12,5	23,5	14	50
240/670-B-K30-MB	**AH240/670G**	813	138	**630**	670	980	308	7,5	873,1	12,5	23,5	26	40
231/670-B-K-MB	**AH31/670A**	1 650	185	**630**	670	1 090	336	7,5	948,2	12,5	23,5	14	60
241/670-B-K30-MB	**AH241/670**	1 540	180	**630**	670	1 090	412	7,5	929,4	12,5	23,5	26	40
232/670-B-K-MB	**AH32/670AG**	2 240	249	**630**	670	1 220	438	12	1 030,5	12,5	23,5	14	62
239/710-K-MB	**AH39/710**	336	105	**670**	710	950	180	6	877,5	12,5	23,5	12	43
230/710-B-K-MB	**AH30/710A**	650	135	**670**	710	1 030	236	7,5	938,8	12,5	23,5	16	50
240/710-B-K30-MB	**AH240/710**	873	152	**670**	710	1 030	315	7,5	921,6	12,5	23,5	26	45
231/710-B-K-MB	**AH31/710A**	1 420	202	**670**	710	1 150	345	9,5	1 006,6	12,5	23,5	16	60
241/710-B-K30-MB	**AH241/710**	1 790	207	**670**	710	1 150	438	9,5	980,2	12,5	23,5	26	45
232/710-B-K-MB	**AH32/710AG**	2 550	275	**670**	710	1 280	450	12	1 088,4	12,5	23,5	16	65
238/710-K-MB	**AH38/710**	139	58,6	**680**	710	870	118	4	824,9	8	15	12	43
239/750-K-MB	**AH39/750**	394	118	**710**	750	1 000	185	6	923,2	12,5	23,5	12	44
230/750-K-MB	**AH30/750A**	786	155	**710**	750	1 090	250	7,5	990,9	12,5	23,5	16	50
240/750-B-K30-MB	**AH240/750**	1 070	174	**710**	750	1 090	335	7,5	976,2	12,5	23,5	28	45
231/750-B-K-MB	**AH31/750A**	1 670	232	**710**	750	1 220	365	9,5	1 067,4	12,5	23,5	16	60
241/750-B-K30-MB	**AH241/750G**	2 300	244	**710**	750	1 220	475	9,5	1 035,8	12,5	23,5	28	45
232/750-B-K-MB	**AH32/750A**	3 050	312	**710**	750	1 360	475	15	1 154,1	12,5	23,5	16	65
239/800-B-K-MB	**AH39/800**	490	155	**750**	800	1 060	195	6	983,7	12,5	23,5	12	45
230/800-K-MB	**AH30/800A**	861	198	**750**	800	1 150	258	7,5	1 050,9	12,5	23,5	18	50
240/800-B-K30-MB	**AH240/800G**	1 190	233	**750**	800	1 150	345	7,5	1 034,1	12,5	23,5	28	50
231/800-K-MB	**AH31/800A**	2 400	297	**750**	800	1 280	375	9,5	1 119,1	12,5	23,5	18	63
241/800-B-K30-MB	**AH241/800G**	2 530	313	**750**	800	1 280	475	9,5	1 099,5	12,5	23,5	28	50
239/850-K-MB	**AH39/850**	554	176	**800**	850	1 120	200	6	1 039,9	12,5	23,5	12	50
230/850-B-K-MB	**AH30/850A**	1 060	224	**800**	850	1 220	272	7,5	1 113,5	12,5	23,5	18	53
240/850-B-K30-MB	**AH240/850**	1 420	259	**800**	850	1 220	365	7,5	1 092,9	12,5	23,5	30	50
231/850-B-K-MB	**AH31/850A**	2 340	336	**800**	850	1 360	400	12	1 198,1	12,5	23,5	18	63
241/850-B-K30-MB	**AH241/850G**	2 840	363	**800**	850	1 360	500	12	1 171,7	12,5	23,5	40	60

		Mounting dimensions			Basic load ratings		Calculation factors				Fatigue limit load	Limiting speed	Reference speed
Thread d_{2G}	l	d_a	D_a	r_a	dyn. C_r	stat. C_{0r}	e	Y_1	Y_2	Y_0	C_{ur}	n_G	n_B
≈	≈	min.	max.	max.	kN	kN					kN	min^{-1}	min^{-1}
Tr655X6	210	653	827	5	4 050	9 800	0,18	3,8	5,66	3,72	710	530	405
Tr670X6	258	658	892	6	6 300	13 700	0,22	3,01	4,48	2,94	890	500	380
Tr670X6	330	658	892	6	8 000	19 000	0,31	2,21	3,29	2,16	1 350	480	260
Tr670X6	375	662	998	6	9 800	20 800	0,31	2,21	3,29	2,16	1 430	480	260
Tr670X6	440	662	998	6	12 900	29 000	0,38	1,78	2,65	1,74	1 960	450	136
Tr670X6	475	678	1 102	10	14 300	28 500	0,37	1,8	2,69	1,76	1 370	450	180
Tr710X7	216	693	877	5	4 300	10 600	0,17	3,95	5,88	3,86	750	500	375
Tr710X7	280	698	952	6	7 200	16 000	0,22	3,01	4,48	2,94	1 100	480	350
Tr710X7	348	698	952	6	9 000	21 600	0,31	2,2	3,27	2,15	1 460	450	240
Tr710X7	395	702	1 058	6	11 000	24 000	0,31	2,21	3,29	2,16	1 560	450	220
Tr710X7	452	702	1 058	6	14 000	31 500	0,37	1,83	2,72	1,79	2 110	430	127
Tr710X7	500	718	1 172	10	16 300	32 500	0,37	1,8	2,69	1,76	2 150	430	160
Tr750X7	228	733	927	5	4 800	12 000	0,18	3,85	5,73	3,76	720	480	350
Tr750X7	286	738	1 002	6	7 650	17 000	0,22	3,07	4,57	3	1 140	480	325
Tr750X7	360	738	1 002	6	9 500	22 800	0,3	2,26	3,37	2,21	1 550	430	223
Tr750X7	405	750	1 110	8	12 500	27 000	0,3	2,25	3,34	2,2	1 810	450	200
Tr750X7	483	750	1 110	8	15 600	35 500	0,38	1,79	2,67	1,75	2 340	400	116
Tr750X7	515	758	1 232	10	17 300	35 500	0,37	1,83	2,72	1,79	2 300	430	150
Tr740X7	163	724,6	855,4	3	2 600	7 500	0,12	5,72	8,51	5,59	540	500	–
Tr800X7	234	773	977	5	5 200	12 900	0,17	3,95	5,88	3,86	790	480	325
Tr800X7	300	778	1 062	6	8 500	19 000	0,22	3,01	4,48	2,94	1 010	450	305
Tr800X7	380	778	1 062	6	10 800	26 000	0,3	2,26	3,37	2,21	1 730	400	204
Tr800X7	425	790	1 180	8	14 000	30 500	0,29	2,3	3,42	2,25	1 990	430	190
Tr800X7	520	790	1 180	8	18 000	40 500	0,38	1,76	2,62	1,72	2 600	300	110
Tr800X7	540	808	1 302	12	19 300	40 000	0,37	1,83	2,72	1,79	2 550	400	140
Tr830X7	245	823	1 037	5	5 850	15 000	0,17	4,05	6,04	3,96	1 010	450	295
Tr850X7	308	828	1 122	6	9 300	21 200	0,22	3,07	4,57	3	1 430	430	280
Tr850X7	395	828	1 122	6	11 600	28 500	0,29	2,33	3,47	2,28	1 810	360	190
Tr850X7	438	840	1 240	8	15 000	33 500	0,29	2,32	3,45	2,26	1 680	400	170
Tr850X7	525	840	1 240	8	18 600	44 000	0,36	1,86	2,77	1,82	2 430	340	95
Tr900X7	258	873	1 097	5	6 300	16 300	0,16	4,11	6,12	4,02	960	430	275
Tr900X7	325	878	1 192	6	10 400	23 600	0,22	3,07	4,57	3	1 540	400	260
Tr900X7	415	878	1 192	6	12 900	32 000	0,29	2,33	3,47	2,28	2 060	480	173
Tr900X7	462	898	1 312	10	17 000	38 000	0,29	2,32	3,45	2,26	2 410	360	160
Tr900X7	560	898	1 312	10	21 200	49 000	0,36	1,89	2,81	1,84	3 150	300	90

Spherical roller bearings

With withdrawal sleeve

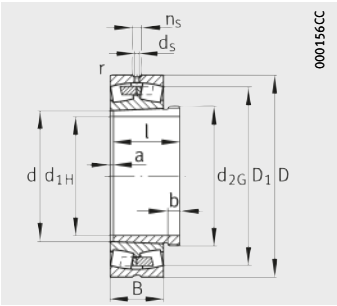

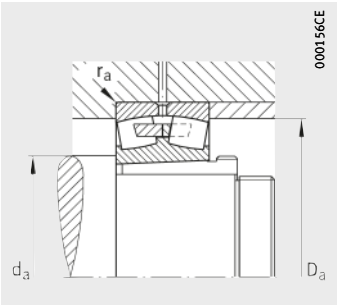

Mounting dimensions

Dimension table (continued) · Dimensions in mm

Designation		Mass m		Dimensions									
Bearing	Withdrawal sleeve	Bearing ≈kg	Withdrawal sleeve ≈kg	d_{1H}	d	D	B	r min.	D_1 ≈	d_s	n_s	a ≈	b
239/900-K-MB	**AH39/900**	641	191	**850**	900	1 180	206	6	1 098,8	12,5	23,5	12	51
230/900-B-K-MB	**AH30/900A**	1 280	246	**850**	900	1 280	280	7,5	1 171,3	12,5	23,5	20	55
240/900-B-K30-MB	**AH240/900G**	1 570	291	**850**	900	1 280	375	7,5	1 150,7	12,5	23,5	45	55
231/900-B-K-MB	**AH31/900A**	2 570	368	**850**	900	1 420	412	12	1 252,4	12,5	23,5	20	63
241/900-B-K30-MB	**AH241/900G**	3 040	397	**850**	900	1 420	515	12	1 230,4	12,5	23,5	45	60
238/900-B-K-MB	**AH38/900**	274	109	**860**	900	1 090	140	5	1 036,1	8	15	12	51
239/950-B-K-MB	**AH39/950G-H**	746	216	**900**	950	1 250	224	7,5	1 162,5	12,5	23,5	15	51
230/950-B-K-MB	**AH30/950A**	1 420	277	**900**	950	1 360	300	7,5	1 244,7	12,5	23,5	20	55
240/950-B-K30-MB	**AH240/950G**	1 970	335	**900**	950	1 360	412	7,5	1 216	12,5	23,5	45	55
231/950-B-K-MB	**AH31/950A**	3 060	414	**900**	950	1 500	438	12	1 322,5	12,5	23,5	20	63
241/950-B-K30-MB	**AH241/950G**	3 820	443	**900**	950	1 500	545	12	1 306,7	12,5	23,5	45	60
239/1000-B-K-MB	**AH39/1000-H**	898	229	**950**	1 000	1 320	236	7,5	1 227,4	12,5	23,5	15	52
230/1000-B-K-MB	**AH30/1 000A**	1 590	309	**950**	1 000	1 420	308	7,5	1 300,3	12,5	23,5	22	57
240/1000-B-K30-MB	**AH240/1000**	2 070	357	**950**	1 000	1 420	412	7,5	1 278,3	12,5	23,5	50	57
231/1000-K-MB	**AH31/1 000A**	4 640	471	**950**	1 000	1 580	462	12	1 392,5	12,5	23,5	22	63
241/1000-B-K30-MB	**AH241/1000**	4 380	502	**950**	1 000	1 580	580	12	1 372,6	12,5	23,5	50	65
230/1060-B-K-MB	**AH30/1 060A**	1 920	396	**1 000**	1 060	1 500	325	9,5	1 374,4	12,5	23,5	22	60
240/1060-B-K30-MB	**AH240/1060**	2 520	465	**1 000**	1 060	1 500	438	9,5	1 353,5	12,5	23,5	50	60
241/1060-B-K30-MB	**AH241/1060**	5 000	632	**1 000**	1 060	1 660	600	15	–	12,5	23,5	50	65
248/1060-B-K30-MB	**AH248/1060**	599	169	**1 020**	1 060	1 280	218	6	1 212,7	9,5	17,7	37	52
230/1120-B-K-MB	**AH30/1 120A**	2 210	451	**1 060**	1 120	1 580	345	9,5	1 447,7	12,5	23,5	22	65
240/1120-B-K30-MB	**AH240/1120**	2 920	524	**1 060**	1 120	1 580	462	9,5	1 429,7	12,5	23,5	50	65
241/1120-B-K30-MB	**AH241/1120**	5 800	717	**1 060**	1 120	1 750	630	15	1 527,2	12,5	23,5	50	75
239/1120-B-K-MB	**AH39/1120G**	1 160	291	**1 070**	1 120	1 460	250	7,5	1 368,1	12,5	23,5	15	52
230/1180-B-K-MB	**AH30/1 180A**	2 510	498	**1 120**	1 180	1 660	355	9,5	1 523,4	12,5	23,5	22	65
239/1180-B-K-MB	**AH39/1180G**	1 340	337	**1 130**	1 180	1 540	272	7,5	1 438,3	12,5	23,5	15	55
230/1250-B-K-MB	**AH30/1 250A**	2 920	629	**1 180**	1 250	1 750	375	9,5	1 607,6	12,5	23,5	22	70
240/1250-B-K30-MB	**AH240/1250**	3 640	733	**1 180**	1 250	1 750	500	0	1 580,6	12,5	23,5	50	70
239/1250-B-K-MB	**AH39/1250G**	1 630	370	**1 200**	1 250	1 630	280	7,5	1 516,1	12,5	23,5	18	55
240/1320-B-K30-MB	**AH240/1320**	4 550	828	**1 250**	1 320	1 850	530	12	1 667,8	12,5	23,5	50	70
239/1320-B-K-MB	**AH39/1320G**	1 950	425	**1 270**	1 320	1 720	300	7,5	1 602,2	12,5	23,5	18	55
240/1400-B-K30-MB	**AH240/1400**	5 170	1 030	**1 320**	1 400	1 950	545	12	1 766,8	12,5	23,5	50	70
239/1400-B-K-MB	**AH39/1400G**	2 200	504	**1 350**	1 400	1 820	315	9,5	1 695,6	12,5	23,5	20	60
238/1500-K-MB	**AH38/1500**	1 380	365	**1 450**	1 500	1 820	243	7	1 729,3	12,5	23,5	20	60
239/1500-B-K-MB	**AH39/1500G**	2 790	569	**1 450**	1 500	1 950	335	9,5	1 817,2	12,5	23,5	20	60

		Mounting dimensions			Basic load ratings		Calculation factors				Fatigue limit load	Limiting speed	Reference speed
Thread d_{2G}	l	d_a	D_a	r_a	dyn. C_r	stat. C_{0r}	e	Y_1	Y_2	Y_0	C_{ur}	n_G	n_B
≈	≈	min.	max.	max.	kN	kN					kN	min^{-1}	min^{-1}
Tr950X8	265	923	1 157	5	6 550	17 300	0,16	4,28	6,37	4,19	1 010	400	260
Tr950X8	335	928	1 252	6	11 000	26 500	0,22	3,14	4,67	3,07	1 620	400	240
Tr950X8	430	928	1 252	6	14 000	36 500	0,28	2,45	3,64	2,39	2 190	300	150
Tr950X8	475	948	1 372	10	18 000	40 500	0,29	2,33	3,47	2,28	2 550	340	150
Tr950X8	575	948	1 372	10	22 400	53 000	0,35	1,91	2,85	1,87	2 900	280	80
Tr930X8	193	918	1 072	4	2 200	5 700	0,11	6,06	9,02	5,92	375	430	–
Tr1000X8	282	978	1 222	6	7 500	20 000	0,16	4,22	6,29	4,13	1 280	360	240
Tr1000X8	355	978	1 332	6	12 200	29 000	0,22	3,14	4,67	3,07	1 810	340	220
Tr1000X8	467	978	1 332	6	16 300	41 500	0,29	2,32	3,45	2,26	2 550	280	140
Tr1000X8	500	998	1 452	10	20 000	45 500	0,29	2,33	3,47	2,28	2 210	300	140
Tr1000X8	605	998	1 452	10	23 600	54 000	0,36	1,87	2,79	1,83	1 720	260	80
Tr1035X8	296	1 028	1 292	6	8 150	21 600	0,16	4,22	6,29	4,13	1 590	340	220
Tr1060X8	365	1 028	1 392	6	13 200	31 500	0,21	3,2	4,77	3,13	1 570	340	200
Tr1060X8	469	1 028	1 392	6	16 600	42 500	0,28	2,41	3,59	2,35	2 550	260	140
Tr1060X8	525	1 048	1 532	10	22 000	51 000	0,29	2,33	3,47	2,28	3 150	280	130
Tr1060X8	645	1 048	1 532	10	27 500	64 000	0,35	1,91	2,85	1,87	4 000	260	70
Tr1120X8	385	1 094	1 466	8	14 300	35 500	0,21	3,27	4,87	3,2	1 740	280	240
Tr1120X8	498	1 094	1 466	8	18 600	50 000	0,27	2,47	3,67	2,41	2 950	260	120
Tr1120X8	665	1 118	1 602	12	29 000	69 500	0,35	1,95	2,9	1,91	4 100	260	67
Tr1095X8	270	1 083	1 257	5	6 950	22 800	0,15	4,54	6,75	4,43	1 280	280	–
Tr1180X8	410	1 154	1 546	8	15 000	38 000	0,21	3,27	4,87	3,2	2 130	260	180
Tr1180X8	527	1 154	1 546	8	20 800	55 000	0,28	2,45	3,64	2,39	3 250	260	110
Tr1180X8	705	1 178	1 692	12	31 000	72 000	0,35	1,91	2,85	1,87	3 950	240	60
Tr1180X8	310	1 148	1 432	6	10 200	27 500	0,16	4,28	6,37	4,19	1 740	280	190
Tr1250X8	420	1 214	1 626	8	16 600	41 500	0,21	3,27	4,87	3,2	2 400	260	170
Tr1250X8	330	1 208	1 512	6	11 400	31 000	0,17	4,05	6,04	3,96	1 760	260	180
Tr1320X8	445	1 284	1 716	8	18 000	46 500	0,2	3,34	4,98	3,27	2 700	260	150
Tr1320X8	570	1 284	1 716	8	23 200	62 000	0,25	2,69	4	2,63	3 600	240	–
Tr1320X8	340	1 278	1 602	6	12 000	32 500	0,15	4,47	6,65	4,37	1 970	260	160
Tr1400X8	600	1 362	1 808	8	26 000	69 500	0,25	2,69	4	2,63	4 100	260	110
Tr1400X8	360	1 348	1 692	6	13 700	39 000	0,16	4,28	6,37	4,19	2 190	260	150
Tr1500X8	615	1 442	1 908	10	28 000	76 500	0,24	2,76	4,11	2,7	4 450	220	80
Tr1500X8	380	1 434	1 786	8	14 600	42 500	0,16	4,28	6,37	4,19	2 390	240	140
Tr1500X8	306	1 528	1 792	6	10 000	33 500	0,12	5,83	8,67	5,7	1 910	220	–
Tr1600X8	400	1 534	1 916	8	16 300	49 000	0,16	4,28	6,37	4,19	2 550	220	130

Special spherical roller bearings

With tapered bore
For work rolls
in cold pilger rolling machines

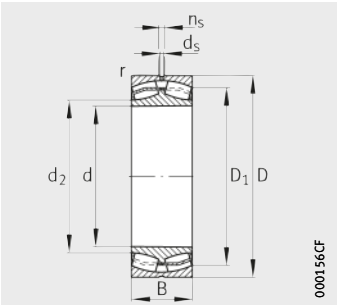

Taper 1:30

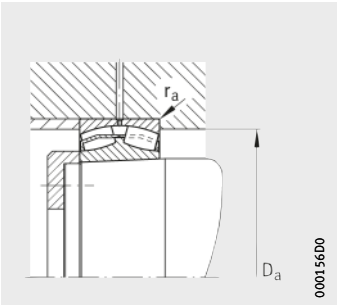

Mounting dimensions

Dimension table · Dimensions in mm

Designation	Mass	Dimensions							
	m	d	D	B	r	D_1	d_2	d_s	n_s
	≈kg				min.	≈	≈		
Z-518393.24138-A-K30	41,3	**190**	320	128	3	270	215,8	6,3	12,2
Z-527490.24140-A-K30	50,4	**200**	340	140	3	285,9	225,7	6,3	12,2
Z-514842.24144-A-K30	63,6	**220**	370	150	4	311,7	247,2	6,3	12,2
Z-527491.24148-A-K30	77,6	**240**	400	160	4	338	–	6,3	12,2
Z-514242.24152-A-K30	114	**260**	440	180	4	370,3	294,5	8	15
Z-526655.24160-A-K30	159	**300**	500	200	5	424,3	340,7	6,3	12,2
Z-523187.24164-A-K30	197	**320**	540	218	5	456,1	362,8	9,5	17,7
F-801462.24172-A-K30	269	**360**	600	243	5	503,6	–	9,5	17,7
Z-525933.24184-A-K30	431	**420**	700	280	6	592,1	476,4	8	15

Bearings with reinforced sheet steel cage;
radial internal clearance to internal clearance group C2, actual value inscribed on bearing.

Mounting dimensions		Basic load ratings		Calculation factors				Fatigue limit load
D_a	r_a	dyn. C_r	stat. C_{0r}	e	Y_1	Y_2	Y_0	C_{ur}
max.	max.	kN	kN					kN
306	2,5	1 340	2 360	0,41	1,66	2,47	1,62	111
326	2,5	1 560	2 700	0,42	1,62	2,42	1,59	123
353	3	1 760	3 100	0,41	1,63	2,43	1,6	139
383	3	1 960	3 450	0,41	1,66	2,47	1,62	195
423	3	2 700	5 100	0,42	1,61	2,4	1,58	213
480	4	3 000	5 700	0,4	1,67	2,49	1,63	295
520	4	3 550	6 550	0,41	1,65	2,46	1,61	265
580	4	4 250	8 150	0,41	1,63	2,43	1,6	395
674	5	5 700	11 600	0,4	1,67	2,49	1,63	520

Special spherical roller bearings

With cylindrical bore
for light section lines,
with loose fit
on the roll journal

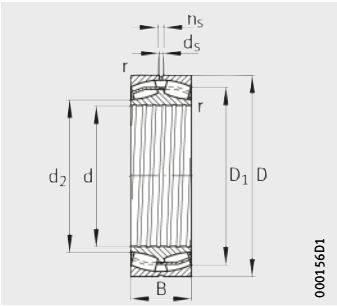

Design 1
Sheet brass cage

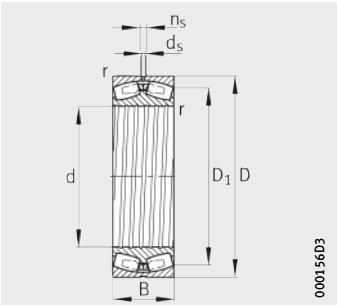

Design 2
Solid brass cage

Dimension table · Dimensions in mm

Designation	Design	Mass	Dimensions							
		m	d	D	B	r	D_1	d_2	d_s	n_s
		≈kg				min.	≈			
Z-568924.23236-B	2	39	**180**	320	112	4	273,4	–	8	15
Z-536423.24138-B	1	42,1	**190**	320	128	3	270	215,7	6,3	12,2
Z-568923.23140-B	2	42,8	**200**	340	112	3	293,3	–	9,5	17,7
Z-541020.24140-B[1)]	1	51,3	**200**	340	140	3	285,4	225,6	6,3	12,2
Z-522444.24140-B	1	51,4	**200**	340	140	3	285,9	225,6	6,3	12,2
Z-572037.24044-B	2	40,6	**220**	340	118	3	297,4	–	6,3	12,2
F-804288.23144-B	2	55,2	**220**	370	120	4	319,2	–	9,5	17,7
Z-527514.24144-B	1	67	**220**	370	150	4	311,7	247,1	6,3	12,2
F-803679.24048-B	2	43,6	**240**	360	118	3	318,9	–	6,3	12,2
Z-517299.24148-B	1	81	**240**	400	160	4	338	270	6,3	12,2
Z-541021.24148-B[1)]	1	81	**240**	400	160	4	338,6	270	6,3	12,2
Z-572036.24052-B	2	66	**260**	400	140	4	349,1	–	6,3	12,2
Z-530662.24152-B	1	111	**260**	440	180	4	370,3	294,3	8	15
Z-561779.24152-B[1)]	1	111	**260**	440	180	4	369,4	294,3	6,3	12,2
Z-538565.24056-B	2	70	**280**	420	140	4	369,5	–	6,3	12,2
Z-531079.24156-B	1	119	**280**	460	180	5	392,8	315,9	8	15
Z-531119.24060-B	2	101	**300**	460	160	4	401,5	–	8	15
Z-541538.24160-B	1	160	**300**	500	200	5	424,4	340,5	8	15
F-804739.24064-B	2	107	**320**	480	160	4	424	–	8	15
Z-541539.24164-B	1	199	**320**	540	218	5	456,1	377,7	9,5	17,7
F-804546.24076-B	2	154	**380**	560	180	5	499	–	9,5	17,7
Z-528479.24184-B	1	443	**420**	700	280	6	590,3	476,2	12,5	23,5

All bearings have inner rings made from case hardening steel and a radial internal clearance to C2.

1) The inner and outer rings are made from case hardening steel.

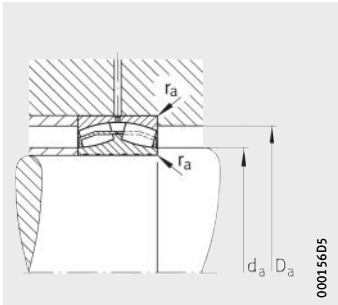

Design 1
Mounting dimensions

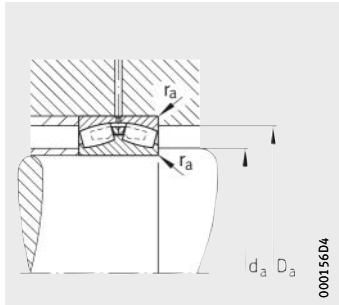

Design 2
Mounting dimensions

Mounting dimensions			Basic load ratings		Calculation factors				Fatigue limit load
d_a	D_a	r_a	dyn. C_r	stat. C_{0r}	e	Y_1	Y_2	Y_0	C_{ur}
min.	max.	max.	kN	kN					kN
197	303	3	1 320	2 160	0,36	1,87	2,79	1,83	124
204	306	2,5	1 400	2 500	0,41	1,66	2,47	1,62	119
214	326	2,5	1 320	2 280	0,35	1,95	2,9	1,91	118
214	326	2,5	1 700	3 000	0,42	1,62	2,42	1,59	139
214	326	2,5	1 700	3 000	0,42	1,62	2,42	1,59	139
232,4	327,6	2,5	1 400	2 700	0,34	1,96	2,92	1,92	139
237	353	3	1 630	2 900	0,33	2,03	3,02	1,98	159
237	353	3	1 900	3 450	0,41	1,63	2,43	1,6	155
252,4	347,6	2,5	1 500	2 900	0,32	2,1	3,13	2,06	157
257	383	3	2 080	3 800	0,41	1,66	2,47	1,62	171
257	383	3	2 120	3 900	0,41	1,66	2,47	1,62	171
274,6	385,4	3	1 900	3 800	0,35	1,94	2,88	1,89	181
277	423	3	2 700	5 100	0,42	1,61	2,4	1,58	214
277	423	3	2 700	5 100	0,42	1,61	2,4	1,58	214
294,6	405,4	3	2 000	4 000	0,33	2,04	3,04	2	194
300	440	4	2 700	5 200	0,39	1,71	2,54	1,67	219
314,6	445,4	3	2 500	5 200	0,35	1,95	2,9	1,91	235
320	480	4	3 250	6 300	0,4	1,67	2,49	1,63	260
334,6	465,4	3	2 600	5 400	0,33	2,06	3,06	2,01	250
340	520	4	3 750	7 200	0,41	1,65	2,46	1,61	530
398	542	4	3 350	7 200	0,31	2,15	3,2	2,1	335
446	674	5	6 200	12 700	0,4	1,67	2,49	1,63	980

Special spherical roller bearings

Bearings of dimension series 49
With sleeve
For converters

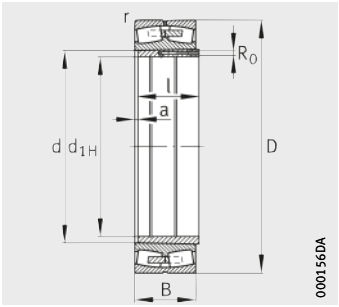

Design 1
With solid brass cage MB

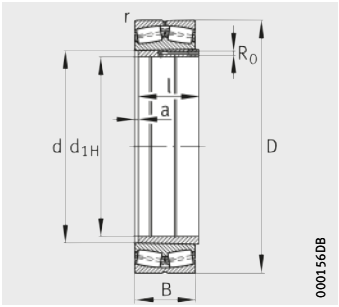

Design 2
With pin cage

Dimension table · Dimensions in mm

Designation		De-sign	Mass m		Initial grease filling quantity	Dimensions				
						Bearing				
Bearing	Sleeve		Bearing	Sleeve		d_{1H}	d	D	B	r
			≈kg	≈kg	≈kg					min.
Z-528741.PRL-K30	**Z-524974.KH**	1	167	33	5	**470**	500	670	170	5
Z-541821.249/500-K30	**Z-524974.KH**	2	177	33	5	**470**	500	670	170	5
Z-528742.PRL-K30	**Z-524976.KH**	1	208	38	5	**500**	530	710	180	5
Z-541822.249/530-K30	**Z-524976.KH**	2	209	38	5	**500**	530	710	180	5
Z-528743.PRL-K30	**Z-524978.KH**	1	235	44	6	**530**	560	750	190	6
Z-541823.249/560-B-K30	**Z-524978.KH**	2	247	44	6	**530**	560	750	190	5
Z-528744.PRL-K30	**Z-524980.KH**	1	281	48	7	**570**	600	800	200	5
Z-541824.249/600-B-K30	**Z-524980.KH**	2	294	48	7	**570**	600	800	200	5
Z-541825.249/630-K30	**Z-524982.KH**	2	375	60	9	**600**	630	850	218	6
Z-528746.PRL-K30	**Z-524984.KH**	1	418	78	10	**630**	670	900	230	7,5
Z-541826.249/670-K30	**Z-524984.KH**	2	435	78	10	**630**	670	900	230	6
Z-528747.PRL-K30	**Z-524986.KH**	1	491	95	12	**670**	710	950	243	6
Z-541827.249/710-B-K30	**Z-524986.KH**	2	526	95	12	**670**	710	950	243	6
Z-528748.PRL-K30	**Z-524988.KH**	1	549	105	14	**710**	750	1 000	250	6
Z-541828.249/750-B-K30	**Z-524988.KH**	2	572	105	14	**710**	750	1 000	250	6
Z-528749.PRL-K30	**Z-524990.KH**	1	621	140	15	**750**	800	1 060	258	7,5
Z-541829.249/800-B-K30	**Z-524990.KH**	2	646	140	15	**750**	800	1 060	258	7,5
Z-528750.PRL-K30	**Z-524992.KH**	1	719	155	18	**800**	850	1 120	272	6
Z-541830.249/850-B-K30	**Z-524992.KH**	2	695	155	18	**800**	850	1 120	272	6
Z-528751.PRL-K30	**Z-524994.KH**	1	816	175	20	**850**	900	1 180	280	6
Z-541831.249/900-B-K30	**Z-524994.KH**	2	849	175	20	**850**	900	1 180	280	6
Z-528752.PRL-K30	**Z-524996.KH**	1	1 000	200	25	**900**	950	1 250	300	7,5
Z-541832.249/950-B-K30	**Z-524996.KH**	2	1 040	200	25	**900**	950	1 250	300	7,5
Z-528753.PRL-K30	**Z-524998.KH**	1	1 120	225	30	**950**	1 000	1 320	315	7,5
Z-541833.249/1000-B-K30	**Z-524998.KH**	2	1 230	225	30	**950**	1 000	1 320	315	7,5
Z-541834.249/1060-B-K30	**Z-525500.KH**	2	1 470	290	35	**1 000**	1 060	1 400	335	7,5
Z-541835.249/1120-B-K30	**Z-525001.KH**	2	1 520	305	37	**1 060**	1 120	1 460	335	7,5
Z-541836.249/1180-B-K30	**Z-525003.KH**	2	1 750	340	43	**1 120**	1 180	1 540	355	7,5
Z-541837.249/1250-B-K30	**Z-525005.KH**	2	2 160	390	50	**1 180**	1 250	1 630	375	7,5
Z-541838.249/1320-B-K30	**Z-525007.KH**	2	2 530	485	60	**1 250**	1 320	1 720	400	7,5

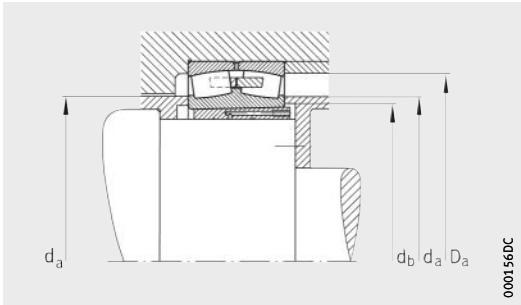

Design 1
Mounting dimensions

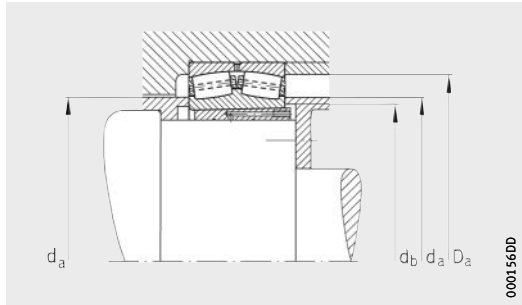

Design 2
Mounting dimensions

Sleeve			Mounting dimensions			Basic load rating	Calculation factor
l	a ≈	R_0	d_a	D_a	d_b min.	stat. C_{0r} kN	Y_0
170	20	$G^1/_8$	540	640	515	7 200	3,07
170	20	$G^1/_8$	540	640	515	9 300	2,97
180	20	$G^1/_8$	570	675	545	8 150	3,07
180	20	$G^1/_8$	570	675	545	10 200	2,97
190	20	$G^1/_8$	600	710	575	10 000	3,13
190	20	$G^1/_8$	600	710	575	11 600	3
200	20	$G^1/_4$	645	755	615	10 800	3,13
200	20	$G^1/_4$	645	755	615	12 900	3
218	22	$G^1/_4$	675	805	645	15 600	2,94
230	22	$G^1/_4$	720	850	685	13 700	3,03
230	22	$G^1/_4$	720	850	685	17 000	2,97
243	22	$G^1/_4$	760	900	725	15 600	3,07
243	22	$G^1/_4$	760	900	725	18 000	2,97
250	22	$G^1/_4$	800	950	765	17 000	3,13
250	22	$G^1/_4$	800	950	765	19 600	3,23
258	22	$G^1/_4$	860	1 010	820	18 600	3,23
258	22	$G^1/_4$	860	1 010	820	22 800	3,1
272	22	$G^1/_4$	910	1 070	870	20 400	3,2
272	22	$G^1/_4$	910	1 070	870	22 400	3,2
280	25	$G^1/_4$	960	1 120	920	22 400	3,3
280	25	$G^1/_4$	960	1 120	920	27 000	3,34
300	25	$G^1/_4$	1 015	1 190	970	25 500	3,2
300	25	$G^1/_4$	1 015	1 190	970	29 000	3,3
315	25	$G^1/_4$	1 065	1 250	1 025	28 000	3,34
315	25	$G^1/_4$	1 065	1 250	1 025	35 500	3,16
335	25	$G^1/_4$	1 135	1 325	1 085	36 500	3,23
335	27	$G^1/_4$	1 195	1 385	1 145	41 500	3,3
355	27	$G^1/_4$	1 260	1 460	1 205	42 500	3,34
375	27	$G^1/_4$	1 330	1 550	1 275	50 000	3,42
400	28	$G^1/_4$	1 400	1 640	1 350	52 000	3,46

FAG

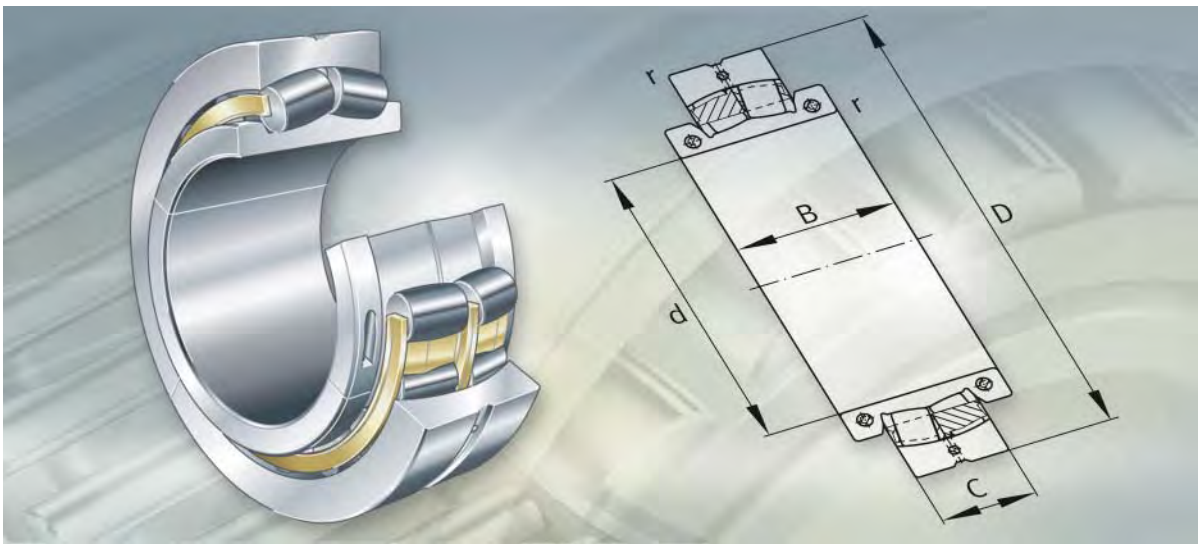

Split spherical roller bearings

Split spherical roller bearings

		Page
Product overview	Split spherical roller bearings	704
Features	Main dimensions	705
	Inner ring without central rib	705
	Inner ring with three rigid ribs	706
	Radial and axial load capacity	707
	Sealing	707
	Lubrication	707
	Compensation of angular misalignments	707
	Operating temperature	707
	Cages	707
	Suffixes	707
Design and safety guidelines	Equivalent dynamic bearing load	708
	Equivalent static bearing load	708
	Static load safety factor	708
	Minimum radial load	709
	Load carrying capacity	709
	Speeds	709
	Design of bearing arrangements	709
Accuracy		710
Dimension tables	Spherical roller bearings, split	712



Inner ring without central rib

222S, 222SM, 230S, 230SM, 231S, 231SM

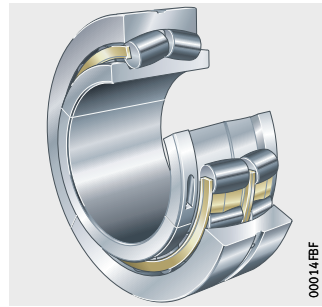

Inner ring with three rigid ribs

230SM, 231SM, 239SM, 240SM, 241SM, Z-5..PRL-03

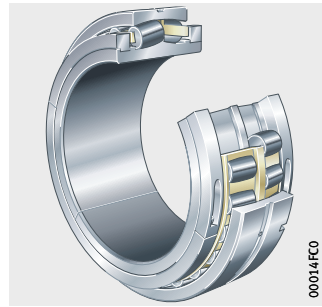

Split spherical roller bearings

Features

Split cylindrical roller bearings are used in bearing positions that can only be accessed with difficulty, for example on cranked and very long shafts. They are mainly used where the replacement of an unsplit spherical roller bearing would require costly additional work. The use of split spherical roller bearings shortens the downtime of machinery and plant and reduces costs.

Split spherical roller bearings have a cylindrical bore.
The inner ring, outer ring and cage with the roller set are split in half. The split bearing rings are held together by screws.

Main dimensions

The main dimensions (outside diameter, outer ring width, bore diameter) are designed such that split spherical roller bearings can in general be fitted in our split plummer block housings instead of unsplit bearings with an adapter sleeve.
The bearings are available for metric shafts and for inch size shafts.

Inner ring without central rib

The internal construction of this standard design was carried over from the proven spherical roller bearing E1. Bearings without a central rib have the highest possible load carrying capacity.
In Design 1, the locking rings are integrated in the inner rings, *Figure 1*.

Design 1

- The bearings have solid brass cages.

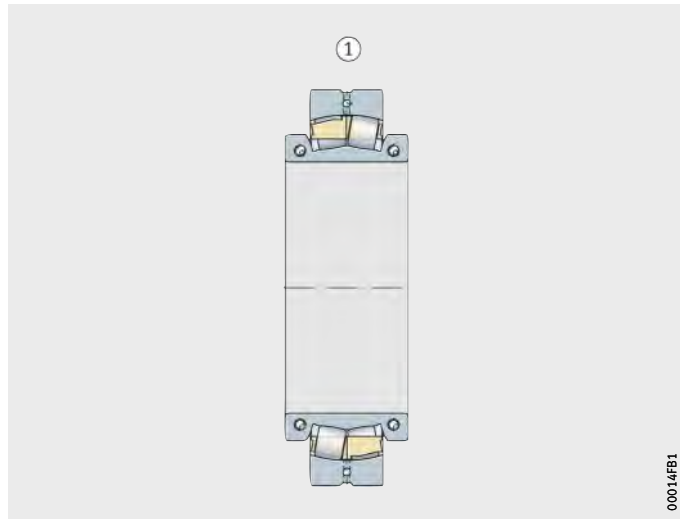

① Design 1 with brass cages

Figure 1
Split spherical roller bearing, inner ring without central rib

Inner ring with three rigid ribs

Split spherical roller bearings with three rigid ribs and separate locking rings are used, for example, where large temperature differentials can occur between the shaft and inner ring halves, *Figure 2*.

Design 2

- These split spherical roller bearings with three rigid ribs and separate locking rings have solid brass cages.
- The bearings are used, for example, in conveying equipment.

Design 3

- This design with three rigid ribs has solid pin cages made from steel and separate locking rings.
- The bearings are designed for extreme loads, such as those occurring in converters.
- The main dimensions of the bearings, with the exception of the inner ring width, are matched to those of unsplit spherical roller bearings of series 249 with a cylindrical bore or with a tapered bore and sleeve.

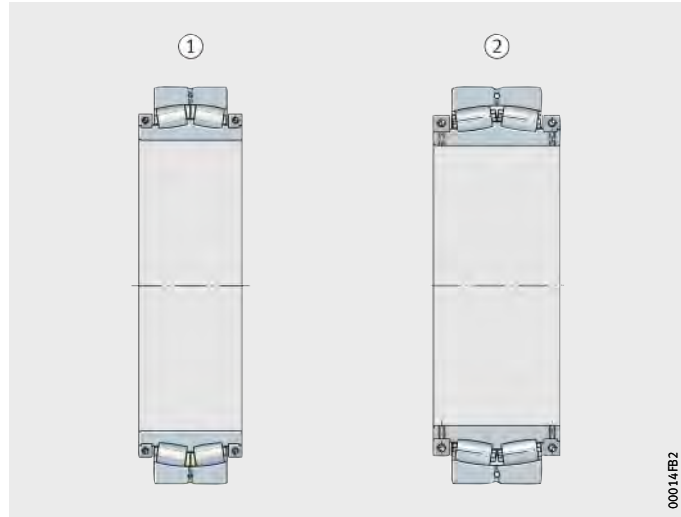

① Design 2 with brass cages
② Design 3 with pin cages

Figure 2
Split spherical roller bearings, inner ring with three rigid ribs

Radial and axial load capacity

Spherical roller bearings can support axial loads in both directions and high radial loads. Due to the maximum number of rollers with the largest possible dimensions, bearings without a central rib have a particularly high load carrying capacity.
The basic load ratings of split bearings are, however, generally lower than those of unsplit bearings, since the reference circle of the rollers is smaller due to the screw connections in the outer ring.

If the inner rings are not axially abutted, the permissible axial load must be observed, see dimension table.

Sealing

Split spherical roller bearings are not sealed.

Lubrication

The bearings are normally lubricated with lithium soap grease of consistency class 2 with EP additives.

The outer ring has a circumferential groove and three lubrication holes for lubrication.

Compensation of angular misalignments

Split spherical roller bearings compensate angular misalignments in the same way as unsplit bearings.

The static angular misalignment (rotating inner ring, constant angular deviation) should be no more than 1,5°.

In the case of converter bearings, the value is restricted to just 10′, since gradual subsidence of the foundations and thermal influences must be taken into consideration.

If dynamic angular misalignments are present, for example where there is a rotating outer ring or rotating inner ring, please contact us.

Operating temperature

Split spherical roller bearings are dimensionally stable up to +200 °C. Bearings with metal cages can be used at operating temperatures from –30 °C to +200 °C.

Cages

In the case of split spherical roller bearings of standard design with metric dimensions, the cage design can be identified from the designation. The suffix MA indicates solid brass cages guided on the outer ring.

In the case of bearings with an inch size bore ≧ 7 inch, the suffix for the solid brass cages is not used.

Due to the high loads involved, split spherical roller bearings for converters normally have pin cages that can accommodate the largest possible number of through-drilled rollers.

Suffixes

Suffixes for available designs: see table.

Available designs

Suffix	Description	Design
MA	Solid brass cages, guided on outer ring	Standard

Design and safety guidelines

Equivalent dynamic bearing load

For split spherical roller bearings subjected to dynamic loads, the overrolling of the joints is taken into consideration in calculation of the equivalent dynamic load by applying the shock factor 1,1.

For split spherical roller bearings under dynamic loading, the following applies:

Load ratio and equivalent dynamic load

Load ratio	Equivalent dynamic load
$\frac{F_a}{F_r} \leqq e$	$P = 1{,}1 \cdot (F_r + Y_1 \cdot F_a)$
$\frac{F_a}{F_r} > e$	$P = 1{,}1 \cdot (0{,}67 \cdot F_r + Y_2 \cdot F_a)$

P kN
Equivalent dynamic bearing load for combined load

F_a kN
Axial dynamic bearing load

F_r kN
Radial dynamic bearing load

e, Y_1, Y_2 –
Factors, see dimension tables.

Equivalent static bearing load

For split spherical roller bearings under static loading, the following applies:

$$P_0 = F_{0r} + Y_0 \cdot F_{0a}$$

P_0 kN
Equivalent static bearing load for combined load

F_{0a} kN
Axial static bearing load
In the case of split spherical roller bearings used as locating bearings on converters, F_{0a} is determined from the external axial load and the reaction force due to non-locating bearing displacement, which can be taken as 15% of the maximum radial force of the non-locating bearing.

F_{0r} kN
Radial static bearing load

Y_0 –
Factor, see dimension tables.

Static load safety factor

The static load safety factor S_0 of converter bearings should be:

$$S_0 \geqq 2$$

$$S_0 = \frac{C_{0r}}{P_0}$$

S_0 –
Static load safety factor

C_{0r} kN
Basic static load rating, see dimension tables

P_0 kN
Equivalent static bearing load for combined load.

Minimum radial load

The minimum radial load on the split spherical roller bearings should be:

$$P = 0{,}02 \cdot C_r$$

P kN
Equivalent dynamic bearing load for combined load
C_r kN
Basic dynamic load rating.

Load carrying capacity

In order to prevent creep of the inner rings in a circumferential direction on the shaft, the value $P/C_r \leqq 0{,}2$ is necessary.
Higher values are permissible if the speed is significantly below the limiting speed n_G. In such cases, please contact us.

Speeds

The bearing tables state the limiting speeds n_G.
The values take account of the cage strength and the vibrations generated through overrolling of the joints. If the limiting speeds are exceeded, consultation with Application Engineering is required.

Design of bearing arrangements

Shaft and housing tolerances

In order that the inner rings have the necessary tight fit once the screws have been tightened, the shaft must be machined to between h6 and h9. These tolerances are the same as those normally used with unsplit bearings located by means of adapter sleeves.
In the case of split spherical roller bearings for converters, trunnion tolerances up to m6 are possible.

The housing bore is normally machined to H7 or H8.



Split spherical roller bearings

Accuracy

Split spherical roller bearings have normal tolerances used for unsplit radial bearings. The dimensional and running tolerances correspond to tolerance class PN to DIN 620-2.

The radial internal clearance of split spherical roller bearings corresponds to internal clearance group CN for unsplit bearings with a cylindrical bore (DIN 620-4). The radial internal clearance of split spherical roller bearings for converters is selected in accordance with the operating temperature and the mounting fits.



Spherical roller bearings

Split

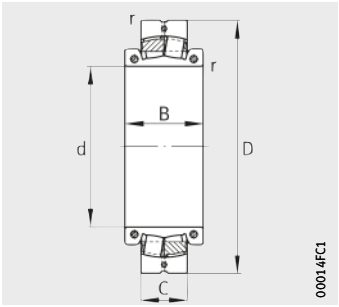

Design 1
Inner ring without central rib

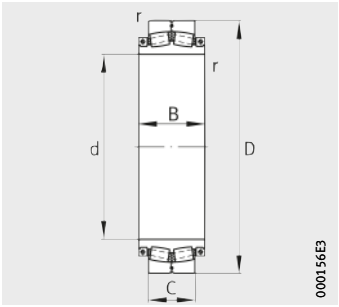

Design 2
Inner ring with three rigid ribs, separate locking rings

Dimension table · Dimensions in mm

Designation	Design	Mass	Dimensions					Basic load ratings		Calculation factors			
		m	d	D	B	C	r	dyn. C_r	stat. C_{0r}	e	Y_1	Y_2	Y_0
		≈kg					min.	kN	kN				
231SM170-MA	1	40,6	**170**	320	142	104	2,1	915	1 430	0,28	2,37	3,53	2,32
231SM180-MA	1	56,4	**180**	340	160	112	3	1 020	1 530	0,29	2,32	3,45	2,26
222SM180-MA	1	55,7	**180**	360	154	98	4	1 140	1 630	0,25	2,71	4,04	2,65
222S.703	1	59	**182,563**	360	154	98	4	1 140	1 630	0,25	2,71	4,04	2,65
222S.708	1	76,8	**190,5**	400	162	108	4	1 340	1 900	0,25	2,69	4	2,63
Z-540788.PRL	1[1)]	39	**200**	330	135	82	3,5	865	1 500	0,26	2,55	3,8	2,5
230SM200-MA	1	41,5	**200**	340	136	90	3	965	1 530	0,23	2,9	4,31	2,83
231SM200-MA	1	61,8	**200**	370	175	120	4	1 320	2 040	0,31	2,21	3,29	2,16
222SM200-MA	1	73,5	**200**	400	162	108	4	1 340	1 900	0,25	2,69	4	2,63
222S.715	1	75,4	**201,613**	400	162	108	4	1 340	1 900	0,25	2,69	4	2,63
222S.800	1	74,7	**203,2**	400	162	108	4	1 340	1 900	0,25	2,69	4	2,63
230S.807	1	58,9	**214,313**	360	156	92	3	1 100	1 830	0,23	2,9	4,31	2,83
230S.808	1	58,9	**215,9**	360	156	92	3	1 100	1 830	0,23	2,9	4,31	2,83
230SM220-MA	1	56,5	**220**	360	156	92	3	1 100	1 830	0,23	2,9	4,31	2,83
231SM220-MA	1	86	**220**	400	190	128	4	1 630	2 600	0,3	2,25	3,34	2,2
222SM220-MA	1	96,3	**220**	440	170	120	4	1 460	2 080	0,25	2,71	4,04	2,65
230S.900	1	52,8	**228,6**	360	160	92	3	1 100	1 830	0,23	2,9	4,31	2,83
231S.907	1	113	**239,713**	440	210	144	4	1 860	3 050	0,3	2,28	3,39	2,23
Z-540436.PRL	1[1)]	60	**240**	375	150	92	4	1 060	1 960	0,25	2,74	4,08	2,68
230SM240-MA	1	57,4	**240**	400	160	104	4	1 220	2 120	0,22	3,04	4,53	2,97
Z-527567.PRL	2[2)]	68	**240**	400	166	104	4	1 460	2 450	0,23	2,95	4,4	2,89
231SM240-MA	1	118	**240**	440	210	144	4	1 860	3 050	0,3	2,28	3,39	2,23
222SM240-MA	1	129	**240**	480	200	130	5	1 860	2 600	0,26	2,64	3,93	2,58
230S.908	1	56,8	**241,3**	400	160	104	4	1 220	2 120	0,22	3,04	4,53	2,97
230S.1000	1	71,2	**254**	420	170	106	4	1 460	2 450	0,23	2,95	4,4	2,89
230SM260-MA	1	68	**260**	420	170	106	4	1 460	2 450	0,23	2,95	4,4	2,89
231S.915	1	116	**260**	460	190	146	5	2 280	3 800	0,3	2,23	3,32	2,18
231SM260-MA	1	111	**260**	460	190	146	5	2 280	3 800	0,3	2,23	3,32	2,18
222SM260-MA	1	130	**260**	500	200	130	5	2 200	3 100	0,25	2,67	3,97	2,61
230S.1008	1	64,3	**266,7**	420	170	106	4	1 460	2 450	0,23	2,95	4,4	2,89
230S.1100	1	91,7	**279,4**	460	176	118	4	1 600	2 800	0,22	3,04	4,53	2,97
231S.1100	1	150	**279,4**	500	218	160	5	2 320	3 900	0,29	2,32	3,45	2,26

1) With central rib.

2) Without central rib.

3) For inner rings without axial abutment.

4) The bearings will also fit in housings from other manufacturers if the internal dimensions are identical.

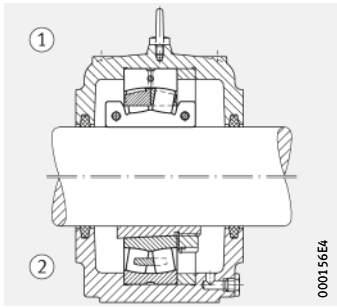

Locating bearings
S30
① Split bearing, ② unsplit bearing

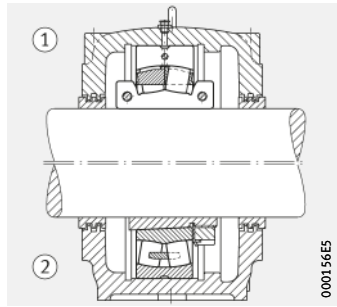

Non-locating bearings
SD

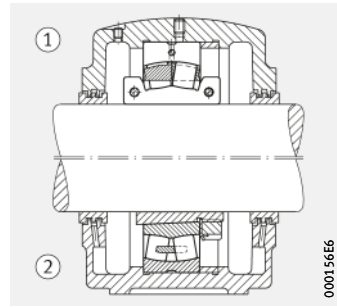

Locating bearings
SAF and SDAF

Fatigue limit load	Permissible axial load[3]	Limiting speed	Tightening torque for screws		Possible replacement for unsplit spherical roller bearing with adapter sleeve			Suitable plummer block housing[4]
C_{ur}	F_a max.	n_G	M_i	M_a	Bearing	Adapter sleeve	Adapter sleeve	
kN	kN	min^{-1}	Nm	Nm				
114	22	630	69	35	23138K	H3138	–	SD3138TS
119	22	600	69	35	23140K	H3140	–	SD3140TS
104	22,2	600	69	35	22240K	H3140	–	SD540
104	22,2	600	69	35	22240K	SNW40.703	H3140X703	SAF540
121	32	560	120	69	22244K	SNW44.708	H3144XX708	SAF544/7.1/2
145	–	–	–	–	–	–	–	–
136	22,2	630	69	35	23044K	H3044X	–	S3044K
151	32	530	120	69	23144K	H3144X	–	SD3144TS
121	32	560	120	69	22244K	H3144X	–	SD544
121	32	560	120	69	22244K	SNW44.715	H3144XX715	SAF544
121	32	560	120	69	22244K	SNW44.800	H3144XX800	SAF544/8
152	32	560	120	35	23048K	SNP3048.807	H3048X807	SAF048K/8.7/16
152	32	560	120	35	23048K	SNP3048.808	H3048X808	SAF048K/8.1/2
152	32	560	120	35	23048K	H3048	–	S3048K
191	32	480	120	69	23148K	H3148X	–	SD3148TS
126	32	500	120	69	22248K	H3148X	–	SD548
152	32	560	120	35	23048K	SNP3048.900	H3048X900	SAF048K/9
218	32	450	120	69	23152K	SNP3152.907	H3152XX907	SDAF3152K/9.7/16
166	–	–	–	–	–	–	–	–
177	32	560	120	69	23052K	H3052	–	S3052K
200	–	–	–	–	–	–	–	–
218	32	450	120	69	23152K	H3152X	–	SD3152TS
157	60	450	295	120	22252K	H3152X	–	SD552
177	32	560	120	69	23052K	SNP3052.908	H3052XX908	SAF052K/9.1/2
200	32	500	120	35	23056K	SNP3056.1000	H3056X1000	SAF056K/10
200	32	500	120	35	23056K	H3056	–	S3056K
255	32	400	120	35	23156K	SNP3156.915	H3156XX915	SDAF3156K/9.15/16
255	32	400	120	35	23156K	H3156X	–	SD3156TS
182	60	430	295	69	22256K	H3156X	–	SD556
200	32	500	120	35	23056K	SNP3056.1008	H3056X1008	SAF056K/10.1/2
228	32	480	120	69	23060K	SNP3060.1100	H3060X1100	SDAF060K/11
265	44	400	190	120	23160K	SNP3160.1100	H3160HGX1100	SDAF3160K/11

Spherical roller bearings

Split

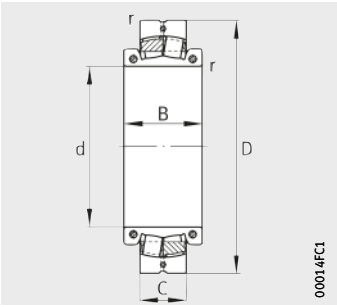

Design 1
Inner ring without central rib

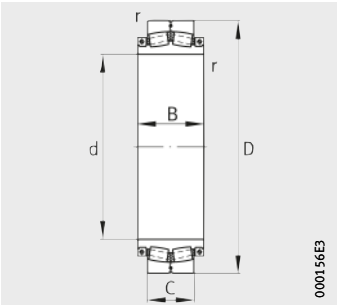

Design 2
Inner ring with three rigid ribs, separate locking rings

Dimension table (continued) · Dimensions in mm

Designation	Design	Mass	Dimensions					Basic load ratings		Calculation factors			
		m	d	D	B	C	r	dyn. C_r	stat. C_{0r}	e	Y_1	Y_2	Y_0
		≈kg					min.	kN	kN				
Z-533468.PRL	2	77	**280**	420	202	140	5	1 830	3 550	0,33	2,04	3,04	2
Z-541420.PRL	1[1)]	85	**280**	455	172	106	5	1 370	2 550	0,25	2,74	4,08	2,68
230SM280-MA	1	97	**280**	460	176	118	4	1 600	2 800	0,22	3,04	4,53	2,97
231SM280-MA	1	145	**280**	500	218	160	5	2 320	3 900	0,29	2,32	3,45	2,26
222SM280-MA	1	184	**280**	540	200	140	5	2 400	3 550	0,24	2,79	4,15	2,73
Z-538380.PRL	2	87,8	**300**	460	168	118	5	1 700	3 100	0,25	2,69	4	2,63
230SM300-MA	1	108	**300**	480	186	121	4	1 860	3 200	0,23	2,9	4,31	2,83
Z-541421.PRL	1[1)]	117	**300**	490	195	118	4	1 800	3 250	0,25	2,69	4	2,63
231SM300-MA	1	184	**300**	540	225	176	5	2 750	4 750	0,29	2,3	3,42	2,25
222SM300-MA	1	214	**300**	580	212	150	5	2 650	4 050	0,24	2,84	4,23	2,78
230S.1200	1	96,5	**304,8**	480	186	121	4	1 860	3 200	0,23	2,9	4,31	2,83
231S.1200	1	182	**304,8**	540	225	176	5	2 750	4 750	0,29	2,3	3,42	2,25
230SM320-MA	1	132	**320**	520	200	133	5	2 040	3 650	0,22	3,04	4,53	2,97
Z-541422.PRL	1[1)]	134	**320**	520	202	121	5	1 930	3 750	0,25	2,74	4,08	2,68
231SM320-MA	1	226	**320**	580	258	190	5	3 100	5 200	0,3	2,26	3,37	2,21
222SM320-MA	1	249	**320**	620	230	165	6	3 100	4 750	0,24	2,76	4,11	2,7
230S.1300	1	165	**330,2**	540	205	134	5	2 360	4 150	0,22	3,01	4,48	2,94
231S.1300	1	288	**330,2**	600	270	192	5	3 900	6 800	0,3	2,25	3,34	2,2
230SM340-MA	1	157	**340**	540	205	134	5	2 360	4 150	0,22	3,01	4,48	2,94
Z-541423.PRL	2	170	**340**	560	205	133	5	2 450	4 300	0,22	3,01	4,48	2,94
231SM340-MA	1	314	**340**	600	270	192	5	3 900	6 800	0,3	2,25	3,34	2,2
222SM340-MA	1	276	**340**	650	240	170	6	3 450	5 100	0,25	2,69	4	2,63
230S.1400	1	158	**355,6**	560	218	135	5	2 550	4 650	0,22	3,1	4,62	3,03
231S.1400	1	273	**355,6**	620	270	194	5	3 900	6 950	0,3	2,28	3,39	2,23
230SM360-MA	1	154	**360**	560	218	135	5	2 550	4 650	0,22	3,1	4,62	3,03
231SM360-MA	1	292	**360**	620	270	194	5	3 900	6 950	0,3	2,28	3,39	2,23
Z-549160.PRL	2	355	**360**	620	298	194	5	3 650	7 100	0,32	2,12	3,15	2,07
Z-535588.PRL	2	150	**380**	560	200	135	6	2 450	4 900	0,24	2,84	4,23	2,78
Z-538301.PRL	2	132	**380**	560	205	135	5	2 450	4 900	0,24	2,84	4,23	2,78
Z-544969.PRL	1[1)]	157	**380**	585	216	135	5	2 280	4 550	0,24	2,84	4,23	2,78
230SM380-MA	1	204	**380**	600	225	148	5	2 700	5 100	0,21	3,2	4,77	3,13
231SM380-MA	1	326	**380**	650	270	200	6	4 050	7 200	0,28	2,39	3,56	2,34
Z-540759.PRL	2	424	**380**	680	340	240	8	5 100	9 300	0,37	1,8	2,69	1,76

1) With central rib.

2) For inner rings without axial abutment.

3) The bearings will also fit in housings from other manufacturers if the internal dimensions are identical.

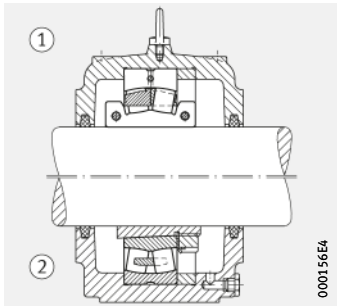

Locating bearings
S30
① Split bearing, ② unsplit bearing

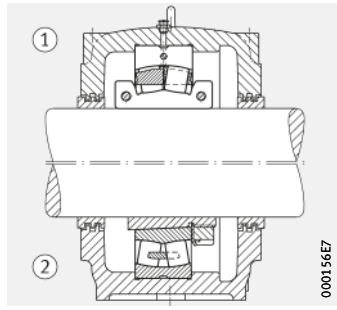

Locating bearings
SD

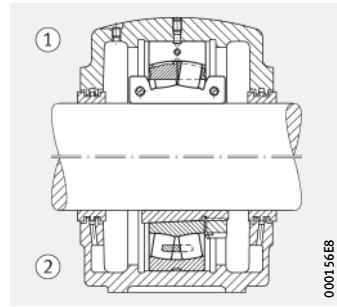

Non-locating bearings
SAF and SDAF

Fatigue limit load	Permissible axial load[2]	Limiting speed	Tightening torque for screws		Possible replacement for unsplit spherical roller bearing with adapter sleeve			Suitable plummer block housing[3]
C_{ur}	F_a max.	n_G	M_i	M_a	Bearing	Adapter sleeve	Adapter sleeve	
kN	kN	min^{-1}	Nm	Nm				
315	–	–	–	–	–	–	–	–
227	–	–	–	–	–	–	–	–
228	32	480	120	69	23060K	H3060	–	S3060K
265	44	400	190	120	23160K	H3160HG	–	SD3160TS
212	60	430	295	120	22260K	H3160HG	–	SD560
255	–	–	–	–	–	–	–	–
255	32	430	120	69	23064K	H3064HG	–	S3064K
198	–	–	295	–	–	–	–	–
305	60	360	295	120	23164K	H3164HG	–	SD3164TS
228	60	380	295	120	22264K	H3164HG	–	SD564
255	32	430	120	69	23064K	SNP3064.1200	H3064HGX1200	SDAF064K/12
305	60	360	295	120	23164K	SNP3164.1200	H3164HGX1200	SDAF3164K/12
285	60	430	295	69	23068K	H3068HG	–	S3068K
270	–	–	–	–	–	–	–	–
325	60	340	295	190	23168K	H3168HG	–	SD3168TS
270	60	360	295	120	22268K	H3168HG	–	–
315	60	380	295	69	23072K	SNP3072.1300	H3072HGX1300	SDAF072K/13
410	60	300	295	35	23172K	SNP3172.1300	H3172HGX1300	SDAF3172K/13
315	60	380	295	69	23072K	H3072HG	–	S3072K
315	60	–	295	120	–	–	–	–
410	60	300	295	35	23172K	H3172HG	–	SD3172TS
280	60	340	295	120	22272K	H3172HG	–	–
350	60	380	295	69	23076K	SNP3076.1400	H3076HGX1400	SDAF076K/14
420	60	300	295	69	23176K	SNP3176.1400	H3176HGX1400	SDAF3176K/14
350	60	380	295	69	23076K	H3076HG	–	S3076K
420	60	300	295	69	23176K	H3176HG	–	SD3176TS
425	–	–	–	–	–	–	–	–
400	–	–	–	–	–	–	–	–
400	–	–	–	–	–	–	–	–
375	–	–	–	–	–	–	–	–
350	60	380	295	120	23080K	H3080HG	–	S3080K
440	60	300	295	120	23180K	H3180HG	–	SD3180TS
740	–	–	–	–	–	–	–	–

Spherical roller bearings

Split

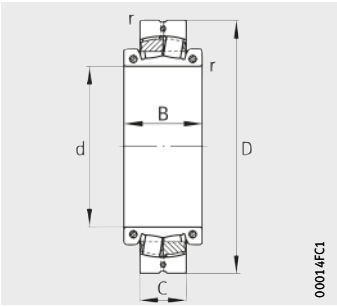

Design 1
Inner ring without central rib

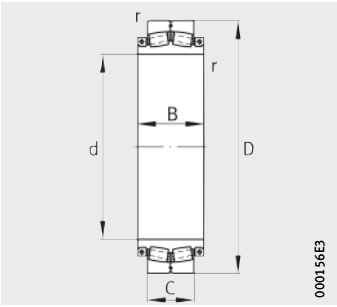

Design 2
Inner ring with three rigid ribs, separate locking rings

Dimension table (continued) · Dimensions in mm

Designation	Design	Mass	Dimensions					Basic load ratings		Calculation factors			
		m	d	D	B	C	r	dyn. C_r	stat. C_{0r}	e	Y_1	Y_2	Y_0
		≈kg					min.	kN	kN				
230S.1500	1	192	**381**	600	225	148	5	2 700	5 100	0,21	3,2	4,77	3,13
231S.1500	1	296	**381**	650	270	200	6	4 050	7 200	0,28	2,39	3,56	2,34
Z-561566.PRL	2[1]	430	**381**	650	300	200	6	4 400	7 800	0,28	2,43	3,61	2,37
Z-524883.PRL	2	170	**400**	600	235	148	5	2 800	5 600	0,24	2,79	4,15	2,73
230SM400-MA	1	214	**400**	620	225	150	5	3 100	5 700	0,22	3,1	4,62	3,03
240SM400-MA	2	313	**400**	620	290	200	5	3 750	8 000	0,32	2,13	3,17	2,08
231SM400-MA	1	371	**400**	700	285	224	6	4 400	7 650	0,28	2,39	3,56	2,34
230S.1600	1	225	**406,4**	650	225	157	5	3 100	5 850	0,21	3,2	4,77	3,13
231S.1600	2	547	**406,4**	720	315	226	6	5 400	9 650	0,29	2,3	3,42	2,25
230SM410-MA	1	222	**410**	650	225	157	5	3 100	5 850	0,21	3,2	4,77	3,13
231SM410-MA	2	566	**410**	720	315	226	6	5 400	9 650	0,29	2,3	3,42	2,25
Z-536955.PRL	2	204	**420**	620	238	150	5	2 800	5 700	0,24	2,84	4,23	2,78
230SM420-MA	1	246	**420**	650	235	157	5	3 100	5 850	0,21	3,2	4,77	3,13
231SM430-MA	2	624	**430**	760	344	240	6	5 500	10 400	0,29	2,33	3,47	2,28
Z-542118.PRL	3	610	**430**	760	344	240	6	6 100	12 700	0,32	2,12	3,15	2,07
Z-537162.PRL	2	295	**440**	650	248	157	6	3 150	6 300	0,24	2,84	4,23	2,78
230SM450-MA	2	291	**450**	700	245	165	6	3 650	6 950	0,21	3,2	4,77	3,13
Z-529173.PRL	3	265	**470**	670	250	170	5	3 350	7 500	0,22	3,07	4,57	3
230SM470-MA	2	354	**470**	720	260	167	6	3 600	7 500	0,23	2,9	4,31	2,83
Z-538297.PRL	2	319	**470**	720	260	167	6	3 650	7 650	0,22	3,01	4,48	2,94
241SM470-MA	2	872	**470**	830	420	325	7,5	7 800	16 000	0,39	1,75	2,61	1,71
Z-547397.PRL	2	355	**480**	700	324	218	6	4 300	9 500	0,3	2,25	3,34	2,2
Z-537276.PRL	3	225	**500**	670	250	170	5	3 250	7 800	0,22	3,14	4,67	3,07
Z-528441.PRL	3	310	**500**	710	260	180	5	3 650	8 800	0,22	3,01	4,48	2,94
Z-548411.PRL	2	295	**500**	720	264	167	6	3 650	7 650	0,22	3,01	4,48	2,94
230SM500-MA	2	475	**500**	780	270	185	6	4 150	8 500	0,2	3,34	4,98	3,27
241SM500-MA	2	1 100	**500**	870	450	335	7,5	8 500	17 600	0,39	1,73	2,58	1,69

1) Without central rib.

2) For inner rings without axial abutment.

3) The bearings will also fit in housings from other manufacturers if the internal dimensions are identical.

4) Withdrawal sleeve.

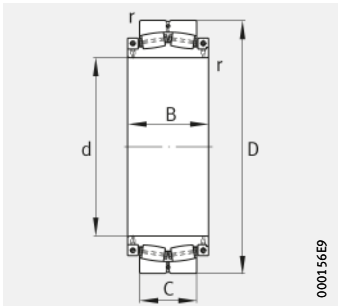

Design 3
With pin cage

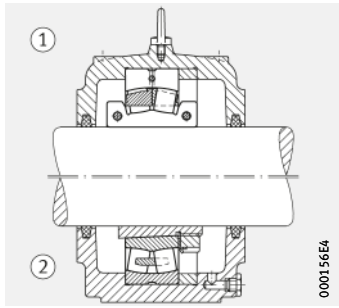

Locating bearings
S30
① Split bearing, ② unsplit bearing

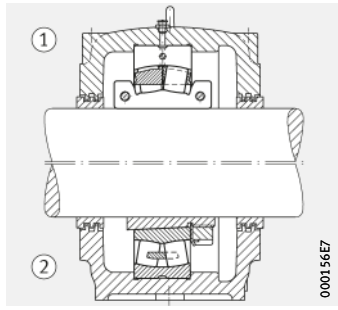

Locating bearings
SD

Fatigue limit load	Permissible axial load[2]	Limiting speed	Tightening torque for screws		Possible replacement for unsplit spherical roller bearing with adapter sleeve			Suitable plummer block housing[3]
C_{ur}	F_a max.	n_G	M_i	M_a	Bearing	Adapter sleeve	Adapter sleeve	
kN	kN	min^{-1}	Nm	Nm				
350	60	380	295	120	23080K	SNP3080.1500	SNP3080X1500	SDAF080K/15
440	60	300	295	120	23180K	SNP3180.1500	H3180HGX1500	SDAF3180K/15
480	–	–	–	–	–	–	–	–
325	–	–	–	–	–	–	–	–
420	60	340	295	69	23084K	H3084XHG	–	S3084K
630	60	190	295	69	–	–	–	–
480	60	280	295	190	23184K	H3184HG	–	SD3184TS
425	60	340	295	120	23088K	SNP3088.1600	SNP3088X1600	SDAF088K/16
570	94	260	580	120	23188K	SNP3188.1600	H3188HGX1600	SDAF3188K/16
425	60	340	295	120	23088K	H3088HG	–	S3088K
570	60	260	295	120	23188K	H3188HG	–	SD3188TS
450	–	–	–	–	–	–	–	–
425	60,5	340	295	120	23088K	AHX3088GH[4]	–	–
600	94,2	300	580	295	23192K	H3192HG	–	–
730	–	–	–	–	–	–	–	–
450	–	–	–	–	–	–	–	–
495	60	300	190	190	23096K	H3096HG	–	S3096K
–	–	–	–	–	–	–	–	–
425	60	190	295	120	230/500K	H30/500HG	–	–
540	–	–	–	–	–	–	–	–
1 140	60	156	1 000	295	241/500K30	H241/500HG	–	–
720	–	–	–	–	–	–	–	–
530	–	–	–	–	–	–	–	–
–	–	–	–	–	–	–	–	–
580	–	–	–	–	–	–	–	–
580	60	300	295	120	230/530K	H30/530HG	–	–
1 280	60	148	1 000	295	241/530K30	H241/530HG	–	–

Spherical roller bearings

Split

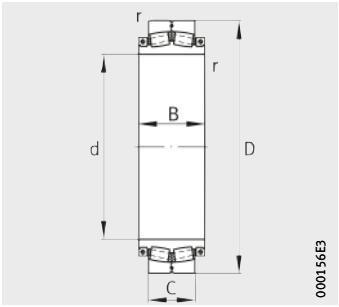

Design 2
Inner ring with three rigid ribs, separate locking rings

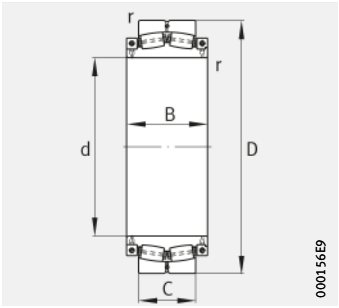

Design 3
With pin cage

Dimension table (continued) · Dimensions in mm

Designation	Design	Mass	Dimensions					Basic load ratings		Calculation factors			
		m	d	D	B	C	r	dyn. C_r	stat. C_{0r}	e	Y_1	Y_2	Y_0
		≈kg					min.	kN	kN				
Z-537277.PRL	3	264	**530**	710	260	180	5	3 650	8 800	0,22	3,14	4,67	3,07
239SM530-MA	2	293	**530**	750	225	140	5	2 750	6 550	0,18	3,85	5,73	3,76
Z-529223.PRL	3	355	**530**	750	270	190	5	4 250	9 650	0,22	3,01	4,48	2,94
Z-532948.01.PRL	2	400	**530**	750	300	190	6	3 800	8 500	0,23	2,9	4,31	2,83
Z-548412.PRL	2	400	**530**	780	272	185	6	4 000	8 300	0,22	3,04	4,53	2,97
230SM530-MA	2	555	**530**	820	300	195	6	4 650	9 650	0,23	2,95	4,4	2,89
241SM530-MA	2	1 360	**530**	920	500	355	7,5	9 150	19 300	0,38	1,77	2,64	1,73
Z-537278.PRL	3	305	**560**	750	270	190	5	4 150	10 400	0,22	3,14	4,67	3,07
239SM560-MA	2	356	**560**	800	235	150	5	2 900	7 100	0,17	3,95	5,88	3,86
Z-548413.PRL	2	420	**560**	820	300	195	6	4 650	9 650	0,23	2,95	4,4	2,89
Z-529224.PRL	3	410	**570**	800	290	200	5	4 650	10 800	0,22	3,01	4,48	2,94
Z-512111.PRL	3	600	**599,45**	870	335	215	6	5 700	12 500	0,22	3,07	4,57	3
Z-547304.PRL	2	260	**600**	800	238	150	5	3 350	8 150	0,17	3,95	5,88	3,86
Z-533761.PRL	3	377	**600**	800	290	200	6	4 550	11 600	0,21	3,2	4,77	3,13
239SM600-MA	2	410	**600**	850	250	165	5	3 900	8 800	0,18	3,66	5,46	3,58
Z-529225.PRL	3	525	**600**	850	310	218	6	5 300	12 500	0,23	2,95	4,4	2,89
Z-538376.PRL	2	850	**600**	920	410	290	6	8 000	17 000	0,31	2,21	3,29	2,16
Z-539466.PRL	3	385	**630**	850	250	165	6	4 300	10 600	0,18	3,8	5,66	3,72
Z-537279.PRL	3	460	**630**	850	310	218	6	5 400	13 700	0,22	3,07	4,57	3
Z-529226.PRL	3	630	**630**	900	330	230	6	5 850	13 400	0,23	2,95	4,4	2,89
230SM630-MA	2	955	**630**	980	355	230	7,5	6 400	13 700	0,22	3,01	4,48	2,94
Z-561196.PRL	2	1 090	**630**	980	430	308	7,5	8 800	17 600	0,3	2,28	3,39	2,23
Z-537280.PRL	3	528	**670**	900	325	230	7,5	6 000	15 300	0,22	3,1	4,62	3,03
Z-529227.PRL	3	740	**670**	950	350	243	6	6 550	15 600	0,22	3,01	4,48	2,94
Z-535551.PRL	2	790	**670**	980	345	230	7,5	6 800	14 600	0,22	3,01	4,48	2,94
Z-546079.PRL	3	1 650	**670**	1 150	500	345	7,5	12 900	28 000	0,3	2,25	3,34	2,2
Z-547305.PRL	2	1 280	**700**	1 030	465	315	7,5	8 650	20 000	0,3	2,26	3,37	2,21
Z-526073.PRL	3	570	**710**	950	350	243	7,5	6 550	16 600	0,22	3,14	4,67	3,07
Z-527943.PRL	3	850	**710**	1 000	360	250	6	7 350	17 600	0,21	3,2	4,77	3,13
Z-533414.PRL	3	707	**750**	1 000	355	250	7,5	7 500	19 600	0,22	3,07	4,57	3
Z-533414.01.PRL	3	707	**750**	1 000	355	250	7,5	7 500	19 600	0,22	3,07	4,57	3
Z-529228.PRL	3	950	**750**	1 060	370	258	6	7 800	19 300	0,22	3,07	4,57	3
Z-547360.PRL	2	1 400	**750**	1 090	500	335	7,5	9 650	22 800	0,31	2,15	3,2	2,1
Z-549640.PRL	2	888	**750**	1 150	398	258	7,5	8 650	19 000	0,22	3,07	4,57	3

[1] For inner rings without axial abutment.

Fatigue limit load	Permissible axial load[1)]	Limiting speed	Tightening torque for screws		Possible replacement for unsplit spherical roller bearing with adapter sleeve	
C_{ur}	F_a max.	n_G	M_i	M_a	Bearing	Adapter sleeve
kN	kN	min^{-1}	Nm	Nm		
410	–	–	–	–	–	–
365	60	170	295	69	239/560K	H39/560HG
–	–	–	–	–	–	–
630	–	–	–	–	–	–
570	–	–	–	–	–	–
700	94,2	160	580	120	230/560K	H30/560HG
1 390	135,3	140	2 000	295	241/560K30	H241/560HG
670	–	–	–	–	–	–
530	60	170	295	69	239/600K	H39/600HG
700	–	–	–	–	–	–
–	–	–	–	–	–	–
840	–	–	–	–	–	–
600	–	–	–	–	–	–
475	60	–	–	–	–	–
540	60	160	295	69	239/630K	H39/630HG
–	–	–	–	–	–	–
1 110	–	–	–	–	–	–
770	–	–	–	–	–	–
840	–	–	–	–	–	–
–	–	–	–	–	–	–
950	94,2	160	1 000	120	230/670K	H30/670HG
1 160	–	–	–	–	–	–
680	94	–	–	–	–	–
–	–	–	–	–	–	–
1 020	–	–	–	–	–	–
1 830	–	–	–	–	–	–
1 340	–	–	–	–	–	–
570	–	–	–	–	–	–
–	–	–	–	–	–	–
760	118	–	–	–	–	–
760	118	–	–	–	–	–
–	–	–	–	–	–	–
1 490	–	–	–	–	–	–
1 220	–	–	–	–	–	–

Spherical roller bearings

Split

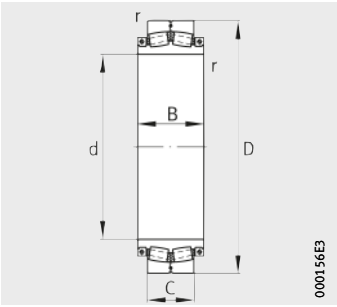

Design 2
Inner ring with three rigid ribs, separate locking rings

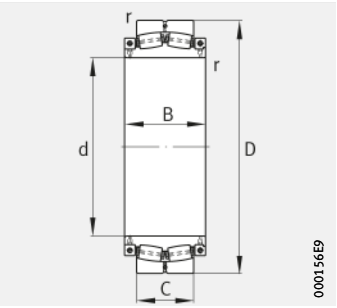

Design 3
With pin cage

Dimension table (continued) · Dimensions in mm

Designation	Design	Mass	Dimensions				
		m	d	D	B	C	r
		≈kg					min.
Z-538984.PRL	2	1 080	**777**	1 110	320	207	7,5
Z-532063.PRL	3	840	**800**	1 060	370	258	7,5
Z-529229.PRL	3	1 100	**800**	1 120	390	272	6
Z-549639.PRL	2	1 170	**800**	1 150	398	258	7,5
Z-548414.PRL	2	1 210	**800**	1 150	412	258	7,5
Z-537281.PRL	3	1 030	**850**	1 120	385	272	6
Z-529230.PRL	3	1 250	**850**	1 180	400	280	6
Z-511962.01.PRL	3	1 500	**850**	1 220	445	287	7,5
Z-547266.PRL	2	1 900	**850**	1 220	540	365	7,5
Z-513411.PRL	3	1 620	**850**	1 280	480	300	7,5
Z-523269.PRL	3	1 990	**850**	1 280	480	310	7,5
Z-522013.PRL	3	2 030	**850**	1 280	540	375	7,5
Z-542824.PRL	2	663	**900**	1 180	300	206	6
Z-537282.PRL	3	1 050	**900**	1 180	390	280	6
Z-527254.PRL	3	1 490	**900**	1 250	420	300	7,5
Z-517015.PRL	3	2 290	**900**	1 360	490	330	7,5
Z-537240.PRL	2	439	**950**	1 150	235	150	6
Z-534826.PRL	3	1 270	**950**	1 250	410	300	7,5
Z-529231.PRL	3	1 800	**950**	1 320	460	315	7,5
Z-517972.PRL	3	2 880	**950**	1 420	585	412	7,5
Z-533567.PRL	3	1 565	**1 000**	1 320	450	315	7,5
Z-529232.PRL	3	2 180	**1 000**	1 400	490	335	7,5
Z-510504.PRL	3	2 690	**1 000**	1 470	530	345	7,5
Z-521868.PRL	3	2 880	**1 000**	1 520	475	315	7,5
Z-537283.PRL	3	1 750	**1 060**	1 400	475	335	7,5
Z-529233.01.PRL	3	2 300	**1 060**	1 460	490	335	7,5
Z-537284.PRL	3	1 930	**1 120**	1 460	475	335	7,5
Z-529234.PRL	3	2 650	**1 120**	1 540	520	355	7,5
Z-536806.PRL	3	2 280	**1 180**	1 540	500	355	7,5
Z-537285.PRL	3	2 800	**1 250**	1 630	545	375	7,5
Z-529215.PRL	3	3 800	**1 250**	1 720	580	400	7,5
Z-545161.PRL	3	3 300	**1 320**	1 720	580	400	7,5

[1] For inner rings without axial abutment.

Basic load ratings		Calculation factors				Fatigue limit load	Permissible axial load[1)]
dyn. C_r	stat. C_{0r}	e	Y_1	Y_2	Y_0	C_{ur}	F_a max.
kN	kN					kN	kN
6 550	14 600	0,18	3,76	5,59	3,67	1 040	–
7 650	20 400	0,2	3,31	4,92	3,23	1 210	–
8 650	20 800	0,22	3,14	4,67	3,07	–	–
8 650	19 000	0,22	3,07	4,57	3	1 220	–
8 150	17 600	0,22	3,07	4,57	3	1 130	–
8 300	22 400	0,21	3,27	4,87	3,2	740	135,3
9 300	23 600	0,21	3,2	4,77	3,13	–	–
10 600	24 500	0,22	3,07	4,57	3	1 530	–
11 800	29 000	0,29	2,33	3,47	2,28	1 860	–
11 600	25 500	0,22	3,14	4,67	3,07	1 610	–
11 600	25 500	0,22	3,14	4,67	3,07	1 610	–
14 000	33 500	0,26	2,55	3,8	2,5	1 380	–
6 400	16 600	0,16	4,28	6,37	4,19	990	–
8 800	24 000	0,2	3,38	5,03	3,3	1 000	–
10 400	26 000	0,21	3,2	4,77	3,13	–	–
12 500	28 500	0,22	3,07	4,57	3	1 010	318
3 800	11 200	0,11	6,06	9,02	5,92	680	–
10 400	28 500	0,2	3,38	5,03	3,3	1 030	135,3
11 400	29 000	0,21	3,2	4,77	3,13	1 010	216,9
17 300	41 500	0,26	2,55	3,8	2,5	2 100	–
11 800	32 500	0,21	3,27	4,87	3,2	1 960	–
12 900	33 500	0,22	3,14	4,67	3,07	2 020	–
13 700	32 000	0,22	3,07	4,57	3	2 010	–
13 200	31 500	0,19	3,5	5,21	3,42	1 120	318
12 700	36 500	0,2	3,31	4,92	3,23	1 190	216,9
14 300	41 500	0,2	3,38	5,03	3,3	1 300	–
12 900	36 500	0,19	3,58	5,33	3,5	2 050	–
13 900	37 500	0,2	3,38	5,03	3,3	1 750	–
14 600	41 500	0,2	3,42	5,09	3,34	1 480	–
16 000	49 000	0,19	3,5	5,21	3,42	1 490	318
18 000	49 000	0,2	3,42	5,09	3,34	2 900	–
17 300	52 000	0,19	3,54	5,27	3,46	1 750	–

FAG

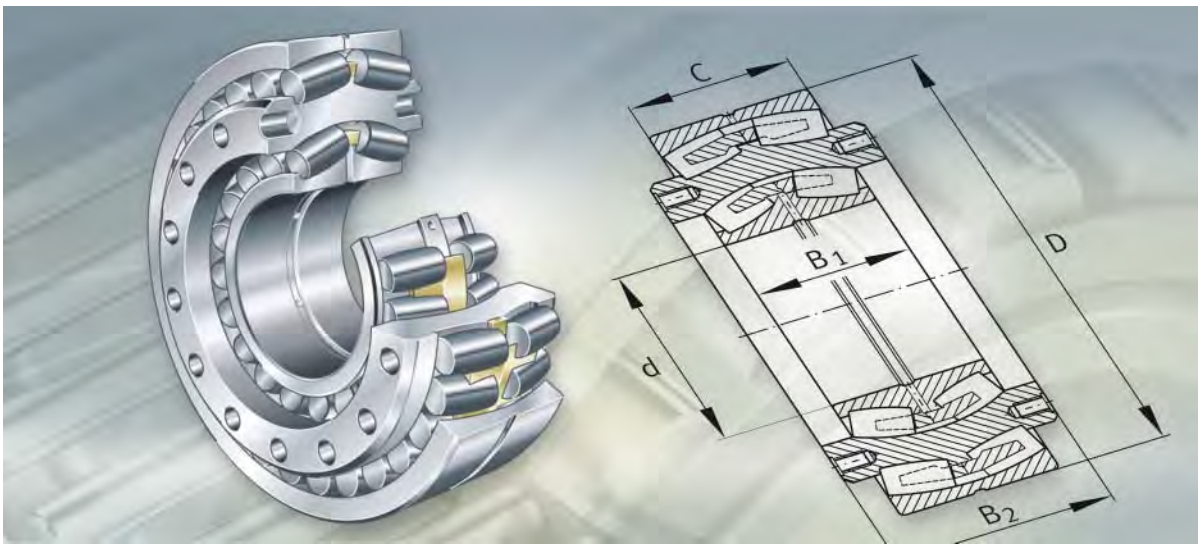

Triple ring bearings

Triple ring bearings

		Page
Product overview	Triple ring bearings	724
Features	Spherical roller bearings as inner and outer bearings	725
	Spherical roller bearing as outer bearing, cylindrical roller bearing as inner bearing	725
	Spherical roller bearing as inner bearing, cylindrical roller bearing as outer bearing	725
	Radial and axial load capacity	726
	Material	726
	Lubrication	726
	Operating temperature	726
	Cages	726
Design and safety guidelines	Equivalent dynamic bearing load	727
	Minimum radial load	727
	Design of bearing arrangements	727
Accuracy		728
Dimension tables	Triple ring bearings, Beloit design	729
	Triple ring bearings, Küsters design	730
	Triple ring bearings, Farrel design	731



Spherical roller bearings as inner and outer bearings (Beloit design)

Z-5..04.DRGL-01

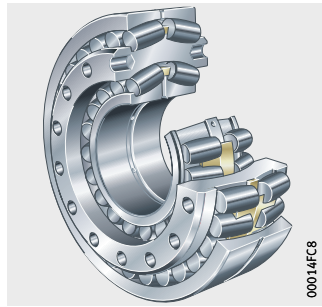

Spherical roller bearing as outer bearing, cylindrical roller bearing as inner bearing (Küsters design)

Z-5..04.DRGL-02

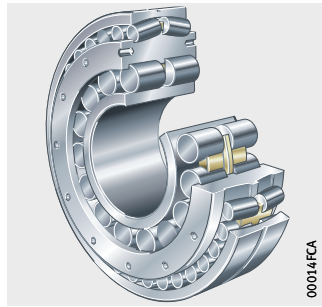

Cylindrical roller bearing as outer bearing, spherical roller bearing as inner bearing (Farrel design)

Z-5..04.DRGL-03

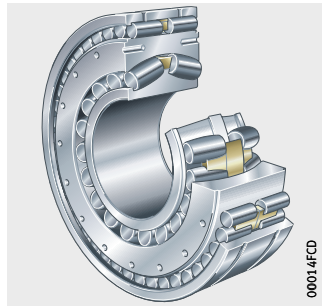

Triple ring bearings

Features

Triple ring bearings are special bearings for deflection compensating rolls in presses and calenders in paper machinery.

In these rolls, the roll sleeve rotates about the stationary roll axis. For driven rolls of older types, triple ring bearings are frequently used. The stationary axis is supported in the bearing interior. The rotating intermediate ring connects the drive to the roll sleeve. The intermediate ring has holes in both end faces so that it can be driven either directly or via a coupling. Depending on the type of deflection compensating roll, one of three bearing designs is used, *Figure 1*.

Spherical roller bearings as inner and outer bearings

Bearing design 1 with one spherical roller bearing each as the inner and outer bearing is also described as the Beloit design for CC rolls (controlled crown rolls).

Spherical roller bearing as outer bearing, cylindrical roller bearing as inner bearing

Design 2 has a double row cylindrical roller bearing as the inner bearing and a spherical roller bearing as the outer bearing. This is described as the Küsters design for S rolls (floating rolls).

Spherical roller bearing as inner bearing, cylindrical roller bearing as outer bearing

In this so-called Farrel design 3, a spherical roller bearing is used as the inner bearing and a double row cylindrical roller bearing as the outer bearing.

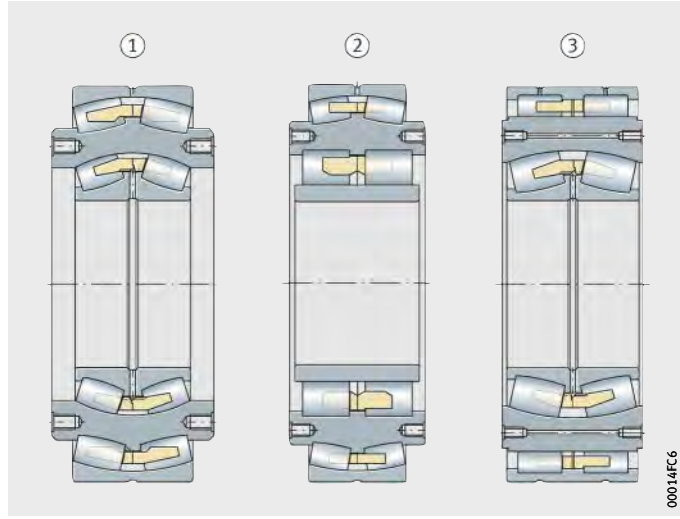

① Beloit design
② Küsters design
③ Farrel design

Figure 1
Triple ring bearings are special bearings for deflection compensating rolls in presses and calenders in paper machinery

Triple ring bearings

Radial and axial load capacity

The spherical roller bearings can support axial loads in both directions and high radial loads. The designs with a cylindrical roller bearing allow axial displacements within the bearing.

Material

The inner rings, which are subjected to the very highest loads, are made from particularly clean rolling bearing steel (suffix 04).

Lubrication

Triple ring bearings are lubricated with oil. The bearings have the necessary lubrication grooves and lubrication slots for reliable lubricant supply.

Operating temperature

Triple ring bearings are dimensionally stable up to +200 °C. Bearings with metal cages can be used at operating temperatures from –30 °C to +200 °C.

Cages

Triple ring bearings are fitted with solid brass cages.

Design and safety guidelines

Equivalent dynamic bearing load

The equivalent dynamic load P is valid for bearings that are subjected to radial and axial dynamic loads. It gives the same rating life as the combined bearing load occurring in practice.

For spherical roller bearings under dynamic loading, the following applies:

Load ratio and equivalent dynamic load

Load ratio	Equivalent dynamic load
$\frac{F_a}{F_r} \leq e$	$P = F_r + Y_1 \cdot F_a$
$\frac{F_a}{F_r} > e$	$P = 0{,}67 \cdot F_r + Y_2 \cdot F_a$

P kN
Equivalent dynamic bearing load for combined load
F_a kN
Axial dynamic bearing load
F_r kN
Radial dynamic bearing load
e, Y_1, Y_2 –
Factors, see dimension tables.

For cylindrical roller bearings under dynamic loading used as non-locating bearings, the following applies:

$$P = F_r$$

Minimum radial load

The minimum radial load on the triple ring bearings should be:

$$P = 0{,}02 \cdot C_r$$

Design of bearing arrangements

Shaft and housing tolerances

The inner rings and outer rings of triple ring bearings do not rotate. A loose fit is therefore permissible on the shaft and in the housing.

Triple ring bearings

Accuracy

Triple ring bearings have the normal tolerances used for unsplit radial bearings. The dimensional tolerances correspond to tolerance class PN to DIN 620-2. However, the running accuracy is normally higher.

The radial internal clearance of triple ring bearings generally corresponds to internal clearance group CN for bearings with a cylindrical bore (DIN 620-4).

Triple ring bearings

Beloit design

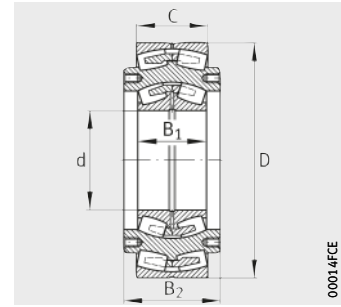

Dimension table · Dimensions in mm

Designation	Mass	Dimensions					Basic load ratings		Fatigue limit load	
	m	d	D	C	B_1	B_2	dyn. Inner bearing C_r	dyn. Outer bearing C_r	Inner bearing C_{ur}	Outer bearing C_{ur}
	≈kg						kN	kN	kN	kN
Z-525349.04.DRGL	177	**180**	480	160	140	215,9	1 470	2 600	158	360
Z-531033.04.DRGL	231	**200**	520	180	160	241,3	1 820	3 100	202	530
Z-527870.04.DRGL	356	**220**	600	200	180	279,4	2 240	3 900	233	670
Z-531040.04.DRGL	370	**240**	620	200	200	279,4	2 700	4 050	360	710
Z-522933.04.DRGL	498	**260**	680	218	218	317,5	3 250	4 750	485	710
Z-525350.04.DRGL	560	**280**	720	218	218	317,5	3 400	4 950	520	850
Z-522401.04.DRGL	750	**300**	780	250	243	342,9	4 050	5 900	550	910
Z-525351.04.DRGL	864	**320**	820	258	258	368,3	4 400	6 400	610	1 050
Z-522400.04.DRGL	1 020	**340**	870	272	280	393,7	5 500	7 100	820	1 200
Z-522934.04.DRGL	1 450	**380**	980	308	300	431,8	6 300	9 000	930	1 460
Z-563933.04.DRGL	1 650	**400**	1 030	315	315	444,5	7 000	9 600	960	1 550
Z-531796.04.DRGL	1 970	**420**	1 090	335	335	457,2	8 300	10 800	1 220	1 730

Triple ring bearings

Küsters design

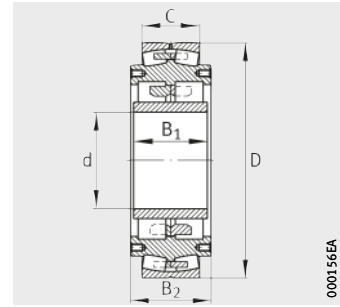

Dimension table · Dimensions in mm

Designation	Mass	Dimensions					Basic load ratings		Fatigue limit load	
	m	d	D	C	B_1	B_2	dyn. Inner bearing C_r	dyn. Outer bearing C_r	Inner bearing C_{ur}	Outer bearing C_{ur}
	≈kg						kN	kN	kN	kN
Z-531151.04.DRGL	58	**140**	360	100	119	129	900	1 130	151	218
Z-531152.04.DRGL	93	**160**	420	118	138	148	1 270	1 580	225	295
Z-531153.04.DRGL	131	**180**	460	118	153	160	1 430	1 690	255	320
Z-531154.04.DRGL	179	**200**	520	140	175	180	1 970	2 270	355	430
Z-531156.04.DRGL	237	**220**	560	140	195	205	2 240	2 380	395	450
Z-531158.04.DRGL	298	**240**	600	160	215	225	2 750	2 900	500	530
Z-531159.04.DRGL	380	**240**	650	170	215	225	2 900	3 250	490	600
Z-531160.04.DRGL	439	**260**	680	170	233	248	3 400	3 450	610	650
Z-531162.04.DRGL	453	**280**	700	180	233	248	3 400	3 750	600	680
Z-531163.04.DRGL	629	**300**	780	200	258	273	4 350	4 500	690	820
Z-531177.04.DRGL	727	**300**	780	240	280	300	4 750	5 500	800	980
Z-531164.04.DRGL	761	**320**	820	218	273	288	4 850	5 200	750	970
Z-531166.04.DRGL	928	**340**	870	230	295	310	5 500	5 700	890	1 040
Z-531165.04.DRGL	891	**360**	870	230	295	320	5 300	5 700	940	1 040
Z-531167.04.DRGL	1 170	**380**	960	243	315	335	6 500	6 800	990	1 170
Z-531168.04.DRGL	1 390	**400**	1 010	258	330	350	6 700	7 200	1 130	1 250

Triple ring bearings

Farrel design

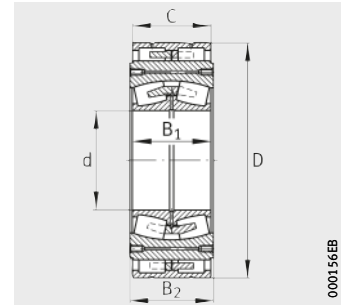

Dimension table · Dimensions in mm

Designation	Mass	Dimensions					Basic load ratings		Fatigue limit load	
	m	d	D	C	B_1	B_2	dyn. Inner bearing C_r	dyn. Outer bearing C_r	Inner bearing C_{ur}	Outer bearing C_{ur}
	≈kg						kN	kN	kN	kN
Z-548685.04.DRGL	82	**150**	393,7	118	118	130,7	1 040	1 320	108	280
Z-562656.04.DRGL	121	**170**	444,5	140	140	152,7	1 400	1 370	197	355
Z-562657.04.DRGL	157	**190**	482,6	150	150	162,7	1 630	1 700	163	405
Z-561310.04.DRGL	222	**220**	539,75	180	180	192,7	2 240	2 500	233	620
Z-534669.04.DRGL	294	**240**	590,55	200	200	212,7	2 700	2 800	360	690
Z-562132.04.DRGL	327	**240**	615,95	200	200	212,7	2 700	2 850	360	700
Z-549731.04.DRGL	404	**280**	666,75	218	218	230,7	3 400	3 500	520	850
Z-562658.04.DRGL	512	**300**	717,55	243	243	255,7	4 050	3 700	550	920
Z-561702.04.DRGL	642	**320**	768,35	258	258	270,7	4 400	4 250	600	1 110
Z-548181.04.DRGL	796	**340**	819,15	280	280	292,7	5 500	4 700	820	1 280
Z-562659.04.DRGL	937	**360**	869,95	290	290	302,7	5 900	5 500	880	1 440
Z-562660.04.DRGL	1 080	**380**	920,75	300	300	310,2	6 300	6 100	930	1 540
Z-562661.04.DRGL	1 270	**400**	971,55	315	315	327,7	7 000	7 000	960	1 740

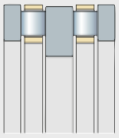

000155F8

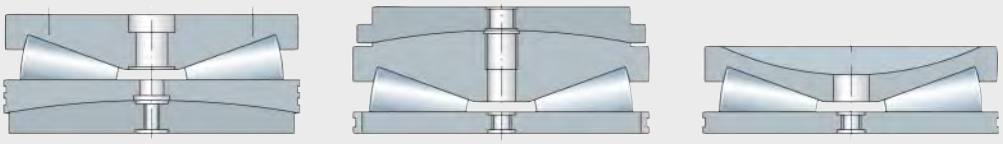

000155FA



000155FE

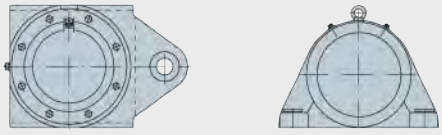

00015600

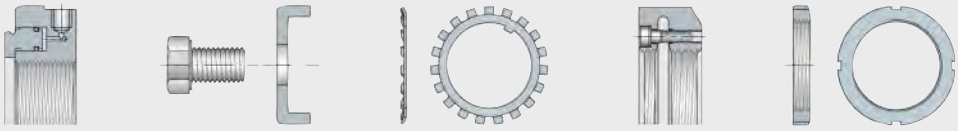

00015602



00015605


00015F6
Axial deep groove ball bearings

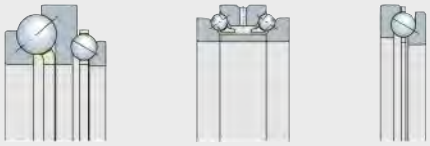
00015F7
Axial angular contact ball bearings


00015F9
Axial cylindrical roller bearings

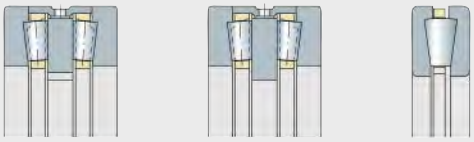
00015FB
Axial tapered roller bearings


00015FC
Axial spherical roller bearings

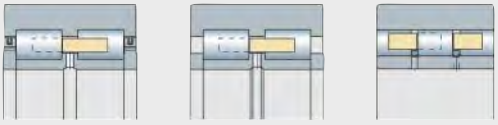
00015FD
Back-up rollers

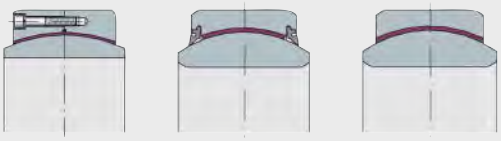
00015FF
Spherical plain bearings


00015601
Bearing housings

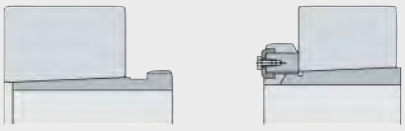
00015603
Fasteners and retainers


00015604
Arcanol rolling bearing greases

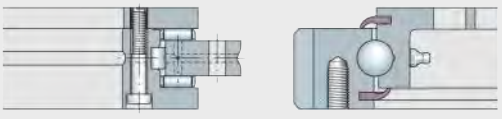
00015606
Other products


00015607
Market sectors

Appendix

FAG

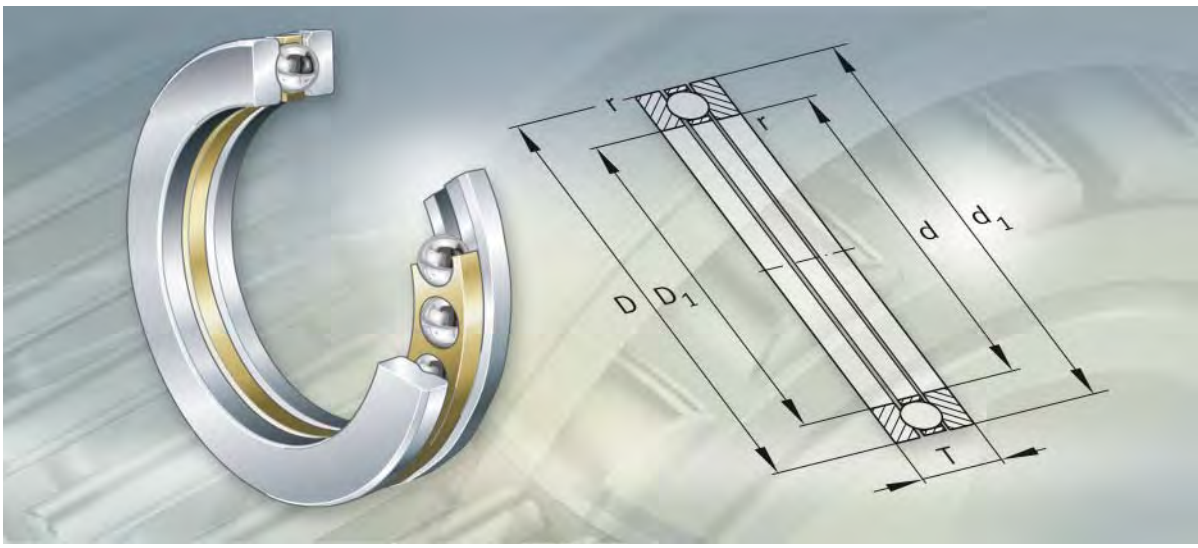

Axial deep groove ball bearings

Axial deep groove ball bearings

		Page
Product overview	Axial deep groove ball bearings	736
Features	Operating temperature	737
	Cages	737
	Suffixes	737
Design and safety guidelines	Equivalent dynamic bearing load	738
	Equivalent static bearing load	738
	Minimum axial load	738
	Speeds	739
	Design of bearing arrangements	739
Accuracy		739
Dimension tables	Axial deep groove ball bearings, single direction	740

Single direction

511, 512, 513, 514



Axial deep groove ball bearings

Features

Axial deep groove ball bearings comprise shaft locating washers, housing locating washers and ball and cage assemblies.
The bearings are not self-retaining; the ball and cage assembly and bearing washers can therefore be mounted separately.

Single direction axial deep groove ball bearings can support axial forces in one direction, but must not be subjected to radial loads.

Bearings of series 511, 512, 513 and 514 have a flat housing locating washer. They do not permit angular misalignment or skewing between the shaft and housing.

Operating temperature

Axial deep groove ball bearings can be used at operating temperatures from –30 °C to +150 °C.

Cages

Large axial deep groove ball bearings have ball-guided solid cages made from brass (suffix M or MP) or steel (suffix F or FP), see table.

Suffixes

Suffixes for available designs: see table.

Available designs

Suffix	Description	Design
F	Solid steel cage, ball-guided	Standard
FP	Solid steel window cage, ball-guided	
M	Solid brass cage, ball-guided	
MP	Solid brass window cage, ball-guided	
P5	Higher accuracy to tolerance class P5	Special design, available by agreement only
P6	Higher accuracy to tolerance class P6	

Design and safety guidelines

Axial deep groove ball bearings can support axial forces only.

Equivalent dynamic bearing load

For bearings under dynamic loading, the following applies:

$$P = F_a$$

P kN
Equivalent dynamic bearing load
F_a kN
Axial dynamic bearing load.

Equivalent static bearing load

For bearings under static loading, the following applies:

$$P_0 = F_{0a}$$

P_0 kN
Equivalent static bearing load
F_{0a} kN
Axial static bearing load.

Minimum axial load

At higher speeds, detrimental sliding movements can occur between the rolling elements and the raceways due to centrifugal forces and gyroscopic moments. In order to prevent slippage, the bearings must be subjected to a minimum load $F_{a\,min}$. This can be achieved by means of preloading, for example using springs.

The minimum load factor A is given in the dimension tables. For n_{max}, the maximum operating speed must be used.

$$F_{a\,min} = A \cdot \left(\frac{n_{max}}{1000} \right)^2$$

$F_{a\,min}$ kN
Minimum axial load
A –
Minimum load factor, see dimension table
n_{max} min^{-1}
Maximum operating speed.

Speeds

ISO 15 312 does not give thermal reference speeds for these bearings.

The dimension tables only state limiting speeds n_G. These values are for oil lubrication and must not be exceeded.

Design of bearing arrangements

Shaft and housing tolerances

For single direction bearings, the shaft tolerance j6 should be selected.

The tolerance of the locating bore is dependent on the running accuracy to be achieved. For normal running accuracy, the tolerance should be in the tolerance zone E8, for high running accuracy it should be in the tolerance zone H6.

Adjacent parts

The shoulders on the adjacent construction (shaft and housing) must be sufficiently high that the shaft and housing locating washers are supported over at least half their height.

The abutment shoulders should be rigid, flat and perpendicular to the axis of rotation.

The maximum values for the radii r_a and the diameters of the abutment surfaces d_a, D_a are indicated in the dimension tables.

Accuracy

The dimensional and running tolerances correspond to tolerance class PN to DIN 620-3.

The main dimensions for single direction bearings correspond to ISO 104/DIN 711.

Axial deep groove ball bearings

Single direction

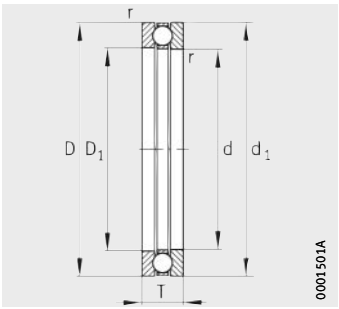

Dimension table · Dimensions in mm

Designation	Mass	Dimensions					
	m	d	D	T	D_1	d_1	r
	≈kg						min.
51338-MP	36,7	**190**	320	105	195	315	4
51340-MP	40,9	**200**	340	110	205	335	4
51344-MP	47	**220**	360	112	225	355	4
51248-MP	22,9	**240**	340	78	244	335	2,1
51448-M	99,4	**240**	440	160	245	435	6
51152-MP	7,89	**260**	320	45	263	317	1,5
51252-MP	24,8	**260**	360	79	264	355	2,1
51352-MP	75,8	**260**	420	130	265	415	5
51156-MP	12	**280**	350	53	283	347	1,5
51256-MP	23,7	**280**	380	80	284	375	2,1
51356-MP	77,9	**280**	440	130	285	435	5
51456-M	195	**280**	520	190	285	515	6
51160-MP	17,1	**300**	380	62	304	376	2
51260-MP	41,8	**300**	420	95	304	415	3
51460-M	193	**300**	540	190	305	535	6
51164-MP	18,5	**320**	400	63	324	396	2
51264-MP	44,6	**320**	440	95	325	435	3
51364 F	102	**320**	500	140	325	495	5
51168-MP	19,9	**340**	420	64	344	416	2
51268-MP	47,6	**340**	460	96	345	455	3
51368 F	141	**340**	540	160	345	535	5
51368-M	141	**340**	540	160	345	535	5
51172-MP	21,5	**360**	440	65	364	436	2
51272-MP	70,4	**360**	500	110	365	495	4
51372-M	148	**360**	560	160	365	555	5
51176-MP	22,4	**380**	460	65	384	456	2
51276-MP	64,8	**380**	520	112	385	515	4
51376-M	202	**380**	600	175	385	595	6
51476-M	371	**380**	670	224	385	665	7,5

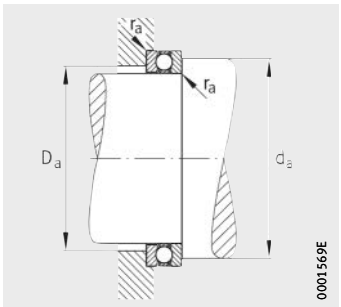

Mounting dimensions

Mounting dimensions			Basic load ratings		Fatigue limit load	Minimum load factor	Limiting speed
d_a	D_a	r_a	dyn. C_a	stat. C_{0a}	C_{ua}	A	n_G
min.	max.	max.	kN	kN	kN	–	min^{-1}
268	242	3	585	2160	60	24	1000
284	256	3	620	2400	65	30	950
304	276	3	640	2550	67	34	670
300	280	2,1	465	1860	48	18	1100
360	320	5	1080	4750	114	120	480
296	284	1,5	236	1020	31,5	5,6	1500
320	300	2,1	490	2040	52	22	1000
356	324	4	815	3600	85	67	560
322	308	1,5	315	1340	40,5	10	1300
340	320	2,1	490	2160	53	24	950
376	344	4	830	3800	88	75	560
424	376	5	1250	5850	129	190	430
348	332	2	365	1600	46	14	1200
372	348	2,5	585	2700	62	38	850
444	396	5	1460	7200	158	260	400
368	352	2	375	1700	47,5	16	1100
392	368	2,5	600	2800	64	43	850
428	392	4	980	4900	108	120	480
388	372	2	380	1800	49	18	750
412	388	2,5	620	3050	67	50	600
460	420	4	1080	5600	118	160	450
460	420	4	1080	5600	118	160	450
408	392	2	405	2000	45	22	700
444	416	3	720	3650	79	70	530
480	440	4	1120	5850	122	180	450
428	412	2	430	2240	48,5	24	670
464	436	3	750	4000	84	80	530
512	468	5	1220	6700	134	240	430
554	496	6	1830	10400	201	560	360

Axial deep groove ball bearings

Single direction

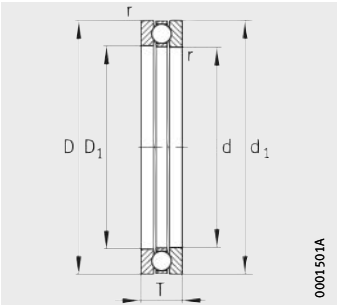

Dimension table (continued) · Dimensions in mm

Designation	Mass	Dimensions					
	m	d	D	T	D_1	d_1	r
	≈kg						min.
51180-MP	23,5	**400**	480	65	404	476	2
51280-MP	78,5	**400**	540	112	405	535	4
51480-M	454	**400**	710	243	405	705	7,5
51184-MP	24,4	**420**	500	65	424	495	2
51284-MP	108	**420**	580	130	425	575	5
51384-MP	220	**420**	650	180	425	645	6
51484-M	468	**420**	730	243	425	725	7,5
51288-MP	99,3	**440**	600	130	445	595	5
51388-M	276	**440**	680	190	445	675	6
51192-MP	37,2	**460**	560	80	464	555	2,1
51292-MP	103	**460**	620	130	465	615	5
51196-MP	38,7	**480**	580	80	484	575	2,1
51296-MP	130	**480**	650	135	485	645	5
511/500-MP	44,9	**500**	600	80	505	595	2,1
512/500-MP	144	**500**	670	135	505	665	5
511/530-MP	55,9	**530**	640	85	535	635	3
512/530-MP	158	**530**	710	140	535	705	5
511/560-MP	58,8	**560**	670	85	565	665	3
512/560-MP	204	**560**	750	150	565	745	5
511/600-MP	62,7	**600**	710	85	605	705	2
512/600-MP	240	**600**	800	160	605	795	5
513/600-M	572	**600**	900	236	605	895	7,5
511/630-FP	81,5	**630**	750	95	635	745	3
511/630-MP	82,1	**630**	750	95	635	745	3
512/630-M	287	**630**	850	175	635	845	6
512/630-MP	287	**630**	850	175	635	845	6
513/630-M	678	**630**	950	250	635	945	9,5
511/670-MP	105	**670**	800	105	675	795	4
512/670-MP	349	**670**	900	180	675	895	6
511/710-MP	113	**710**	850	112	715	845	4
512/710-MP	376	**710**	950	190	715	945	6
511/750-MP	147	**750**	900	120	755	895	4
512/750-MP	458	**750**	1 000	195	755	995	6

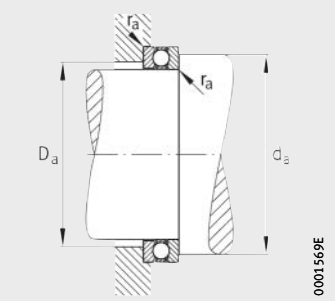

Mounting dimensions

Mounting dimensions			Basic load ratings		Fatigue limit load	Minimum load factor	Limiting speed
d_a	D_a	r_a	dyn. C_a	stat. C_{0a}	C_{ua}	A	n_G
min.	max.	max.	kN	kN	kN	–	min^{-1}
448	432	2	440	2 320	49,5	28	670
484	456	3	800	4 400	92	100	500
586	524	6	1 930	11 400	218	670	340
468	452	2	440	2 450	51	30	630
516	484	4	930	5 200	101	140	480
558	512	5	1 320	7 500	145	300	400
606	544	6	1 900	11 400	214	670	340
536	504	4	930	5 400	104	150	450
584	536	5	1 460	8 800	164	400	380
520	500	2,1	530	3 100	61	50	560
556	524	4	950	5 600	106	170	450
540	520	2,1	540	3 250	63	53	530
582	548	4	1 020	6 200	114	200	430
560	540	2,1	550	3 350	63	56	530
602	568	4	1 020	6 400	116	220	430
596	574	2,5	620	3 900	73	80	480
638	602	4	1 120	7 100	126	260	400
626	604	2,5	630	4 150	74	85	480
674	636	4	1 220	8 150	143	340	380
666	644	2,5	640	4 400	76	100	450
720	680	4	1 320	9 000	151	430	360
780	720	6	2 000	14 300	229	1 100	320
702	678	2,5	720	5 000	84	130	430
702	678	2,5	720	5 000	84	130	430
762	718	5	1 460	10 400	172	600	340
762	718	5	1 460	10 400	172	600	340
822	758	8	2 120	15 600	248	1 300	300
744	722	3	800	5 700	94	170	400
808	762	5	1 560	11 600	183	700	340
794	766	3	865	6 550	104	220	380
854	806	5	1 660	12 700	201	850	320
840	810	3	1 020	7 800	124	320	360
900	850	5	1 800	14 000	212	1 000	320

Axial deep groove ball bearings

Single direction

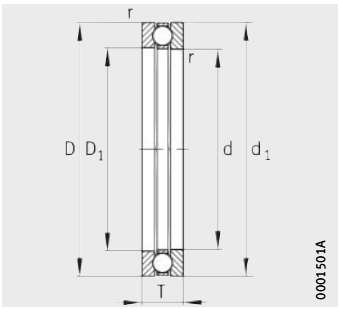

Dimension table (continued) · Dimensions in mm

Designation	Mass	Dimensions					
	m	d	D	T	D_1	d_1	r
	≈kg						min.
511/800-MP	157	**800**	950	120	805	945	4
512/800-M	532	**800**	1 060	205	805	1 055	7,5
512/800-MP	532	**800**	1 060	205	805	1 055	7,5
511/850-MP	168	**850**	1 000	120	855	995	4
512/850-MP	493	**850**	1 120	212	855	1 115	7,5
511/900-MP	217	**900**	1 060	130	905	1 055	5
512/900-MP	691	**900**	1 180	220	905	1 175	7,5
511/950-MP	250	**950**	1 120	135	955	1 115	5
512/950-M	838	**950**	1 250	236	955	1 245	7,5
512/950-MP	838	**950**	1 250	236	955	1 245	7,5
511/1000-MP	278	**1 000**	1 180	140	1 005	1 175	5
512/1000-MP	998	**1 000**	1 320	250	1 005	1 315	9,5
511/1060-MP	353	**1 060**	1 250	150	1 065	1 245	5
512/1060-MP	1 200	**1 060**	1 400	265	1 065	1 395	9,5
511/1120-MP	390	**1 120**	1 320	160	1 125	1 315	5
511/1180-MP	533	**1 180**	1 400	175	1 185	1 395	6
511/1250-MP	507	**1 250**	1 460	175	1 255	1 455	6
511/1320-MP	594	**1 320**	1 540	175	1 325	1 535	6
511/1400-MP	643	**1 400**	1 630	180	1 410	1 620	6
511/1500-M	836	**1 500**	1 750	195	1 510	1 740	6
511/1700-M	1 110	**1 700**	1 970	212	1 710	1 960	7,5

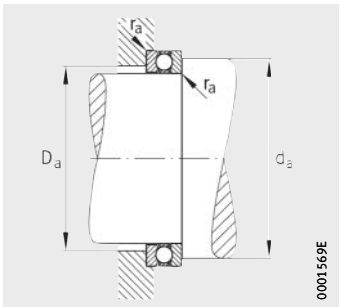

Mounting dimensions

Mounting dimensions			Basic load ratings		Fatigue limit load	Minimum load factor	Limiting speed
d_a	D_a	r_a	dyn. C_a	stat. C_{0a}	C_{ua}	A	n_G
min.	max.	max.	kN	kN	kN	–	min^{-1}
890	860	3	1 020	8 300	125	360	340
956	904	6	1 860	15 000	221	1 200	300
956	904	6	1 860	15 000	221	1 200	300
940	910	3	1 060	8 800	130	400	340
1 012	958	6	2 040	17 300	243	1 500	280
996	964	4	1 080	9 300	132	450	320
1 068	1 012	6	2 160	19 000	265	1 900	260
1 052	1 018	4	1 220	11 000	151	630	320
1 130	1 070	6	2 320	20 800	280	2 200	240
1 130	1 070	6	2 320	20 800	280	2 200	240
1 108	1 072	4	1 320	12 200	163	750	300
1 192	1 128	8	2 550	24 000	315	3 000	220
1 174	1 136	4	1 530	14 600	193	1 100	280
1 264	1 196	8	2 800	27 000	340	3 800	200
1 240	1 200	4	1 500	14 600	187	1 100	260
1 312	1 268	5	1 660	17 000	209	1 500	240
1 378	1 332	5	1 730	18 300	221	1 700	220
1 454	1 406	5	1 760	19 000	224	1 900	200
1 540	1 490	5	1 930	22 000	250	2 400	200
1 651	1 599	5	2 120	25 000	270	3 200	180
1 862	1 808	6	2 400	30 000	315	4 800	170

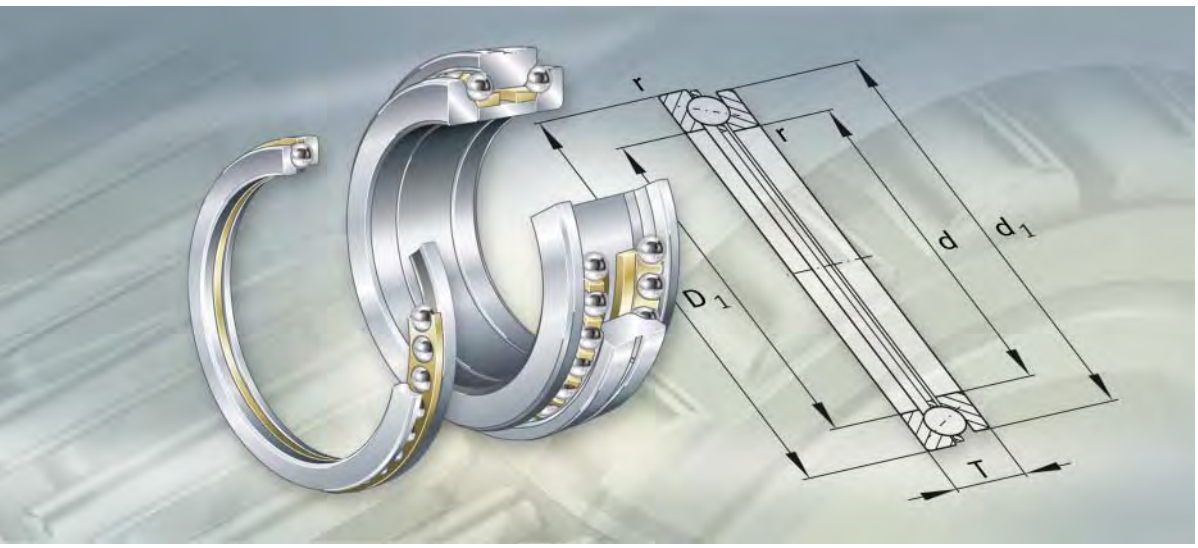

Axial angular contact ball bearings

Single direction
Double direction

Axial angular contact ball bearings

Single direction axial angular contact ball bearings

750

Single direction axial angular ball bearings can support high axial forces in one direction. They are only suitable for radial forces under certain conditions. The bearings are separable.
As a result, the rings can be mounted separately. At higher speeds, a minimum axial load is required. The inch size main dimensions and designations (Z-5..ASKL) of these special bearings are not standardised. A typical application for these axial angular contact ball bearings is in rotary tables for drilling rigs.

Double direction axial angular contact ball bearings

760

Double direction axial angular contact ball bearings can support axial forces in both directions. Bearings of series 2344 and 2347 with metric dimensions are used as high precision bearings in machine tool spindles. The axial angular contact ball bearing is arranged against a double row cylindrical roller bearing of series NN30 that supports the radial forces. The parts of the axial bearing can be mounted separately. For rotary tables in drilling rigs, double direction axial angular contact ball bearings with inch size main dimensions and non-standardised designations (Z-5..ASKLZ) were developed. These special bearings comprise an upper bearing capable of supporting loads and a smaller bearing that fulfils the counterstay function. These bearings can support not only axial loads but also radial and moment loads. The bearing parts can be mounted separately.



000156F9

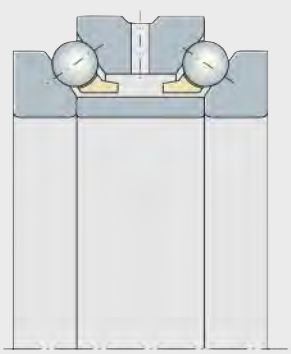

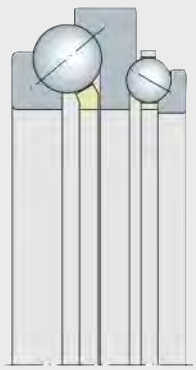

000156FA

FAG

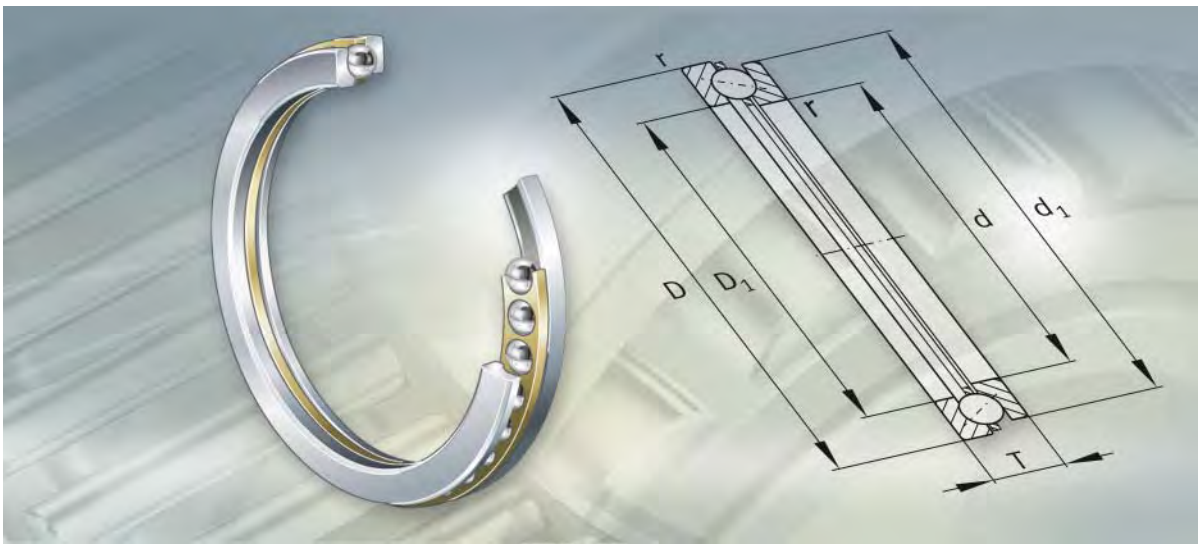

Single direction axial angular contact ball bearings

Single direction axial angular contact ball bearings



		Page
Product overview	Single direction axial angular contact ball bearings	752
Features	Axial and radial load capacity	753
	Sealing	753
	Lubrication	753
	Operating temperature	753
	Cage	753
Design and safety guidelines	Equivalent dynamic bearing load	754
	Equivalent static bearing load	754
	Minimum axial load	754
Accuracy		755
Dimension tables	Axial angular contact ball bearings, single direction	756

Single direction axial angular contact ball bearings

Bearings for rotary tables

Z-5..ASKL1



Single direction axial angular contact ball bearings



Features

Single direction axial angular contact ball bearings comprise a shaft locating washer and a housing locating washer, into which raceways are machined, and a cage with balls. Due to the large number of balls, the bearings have high rigidity. The cage is guided on the rib of the housing locating washer. Single direction axial angular contact ball bearings are separable. The bearing washers and the cage can be mounted separately.

Single direction axial angular contact ball bearings do not permit angular misalignment or skewing between the shaft and housing.

Single direction axial angular contact ball bearings have non-standardised inch size dimensions and designations (Z-5..ASKL).

Axial and radial load capacity

In their main application in rotary tables for drilling rigs, two axial angular contact ball bearings are axially adjusted against each other.

The upper bearing with the higher load carrying capacity can support very high axial forces (the weight of the drill string) in one direction. The bearings are only suitable for radial loads under certain conditions.

Sealing

Axial angular contact ball bearings are of an open design.

Lubrication

Due to the vertical arrangement of the shaft, the single direction axial angular contact ball bearings are lubricated with oil.

Operating temperature

The single direction axial angular contact ball bearings can be used at operating temperatures from –30 °C to +150 °C.

Cage

The solid brass cage is guided on the rib of the housing locating washer.

Single direction axial angular contact ball bearings

Design and safety guidelines

Equivalent dynamic bearing load

Single direction axial angular ball bearings can support axial forces and low radial forces.

For bearings under dynamic loading, the following applies:

$$P = F_a + 0{,}92 \cdot F_r$$

P kN
Equivalent dynamic bearing load
F_a kN
Axial dynamic bearing load
F_r kN
Radial dynamic bearing load.

Equivalent static bearing load

Single direction axial angular ball bearings can support axial forces and low radial forces.

For bearings under static loading, the following applies:

$$P_0 = F_{0a} + 4 \cdot F_{0r}$$

P_0 kN
Equivalent static bearing load
F_{0a} kN
Axial static bearing load
F_{0r} kN
Radial static bearing load.

Minimum axial load

At higher speeds, detrimental sliding movements can occur between the rolling elements and the raceways due to centrifugal forces and gyroscopic moments. In order to prevent slippage, the bearings must be subjected to a minimum load $F_{a\,min}$.

The minimum load factor A is given in the dimension tables.

For n_{max}, the maximum operating speed must be used.

$$F_{a\,min} = A \cdot \left(\frac{n_{max}}{1000} \right)^2$$

$F_{a\,min}$ kN
Minimum axial load
A –
Minimum load factor, see dimension table
n_{max} min^{-1}
Maximum operating speed.

In general, the axial load due to the inherent weight of the bearing parts or the preload is already higher than the required minimum load.

Accuracy

The normal tolerances of the bearings for rotary tables are given in the following tables.

Tolerances for shaft locating washer

Bore d mm		Bore deviation Δ_{dmp} µm	
over	incl.		
250	315	0	−36
315	400	0	−41
400	500	0	−46
500	630	0	−51
630	800	0	−76
800	1 000	0	−102
1 000	1 250	0	−127
1 250	1 600	0	−165

Tolerances for housing locating washer

Outside diameter D mm		Outside diameter deviation Δ_{Dmp} µm	
over	incl.		
315	400	0	−41
400	500	0	−46
500	630	0	−51
630	800	0	−76
800	1 000	0	−102
1 000	1 250	0	−127
1 250	1 600	0	−165

Tolerances for nominal bearing height

Bore d mm		Deviation of nominal bearing height Δ_{Ts} µm	
over	incl.		
250	315	+254	−254
315	400	+254	−254
400	500	+254	−254
500	630	+381	−381
630	800	+381	−381
800	1 000	+381	−381
1 000	1 250	+381	−381
1 250	1 600	+381	−381

Axial angular contact ball bearings

Single direction

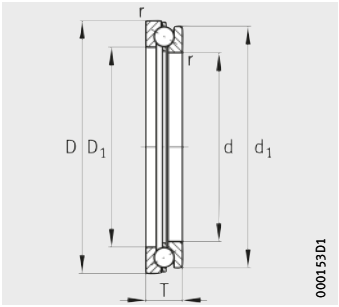

Dimension table · Dimensions in mm

Designation	Mass	Dimensions					
	m	d	D	T	r	D_1	d_1
	≈kg				min.		
Z-547627.ASKL	16,3	**292,1**	368,3	63,5	3,2	298,45	361,95
Z-547628.ASKL	15,1	**292,1**	381	50,8	3,2	304,8	368,3
Z-547629.ASKL	17,5	**304,8**	406,4	57,15	3,2	342,9	368,3
Z-547630.ASKL	12,9	**352,425**	430,149	47,625	1,6	374,65	412,75
Z-547631.ASKL	22,7	**371,475**	476,25	57,15	4,8	401,625	446,075
Z-547632.ASKL	47,4	**381**	520,7	84,125	4,8	419,1	482,6
Z-560590.ASKL	27,4	**420**	520	65	3	440	500
Z-547633.ASKL	42,6	**427,025**	565,15	69,85	3,2	463,55	515,925
Z-547634.ASKL	87,9	**431,8**	635	88,9	8	488,95	565,15
Z-547635.ASKL	39,8	**438,252**	577,85	69,977	6,35	501,65	514,35
Z-547636.ASKL	28,5	**450,85**	558,8	58,725	3,2	482,6	525,145
Z-547637.ASKL	46,2	**457,2**	584,2	76,2	6,35	482,6	549,275
Z-547638.ASKL	70,7	**457,2**	624,475	92,075	3,2	508	549,275
Z-547640.ASKL	162	**488,95**	742,95	127	6,35	596,9	635
Z-535503.ASKL	26,1	**495,3**	584,2	57,15	3,2	508	571,5
Z-547560.ASKL	120	**508**	704,85	117,475	6,35	565,15	628,65
Z-547561.ASKL	121	**508**	704,85	117,475	6,35	565,15	628,65
Z-544556.ASKL	38,2	**511,15**	628,65	66,93	3	549,28	590,55
Z-547641.ASKL	38,9	**511,175**	628,65	66,675	3,2	549,275	590,55
Z-546868.ASKL	102	**514,248**	704,85	114,554	6,5	571,627	622,3
Z-544554.ASKL	107	**514,248**	704,85	114,554	6,35	571,5	622,3
Z-524431.ASKL	111	**514,274**	704,85	114,3	6,35	571,5	622,3
Z-547562.ASKL	115	**514,35**	704,85	114,3	6,35	571,5	622,3
Z-547643.ASKL	139	**577,85**	774,7	117,475	6,35	622,3	704,85
Z-547642.ASKL	140	**577,85**	774,7	117,475	6,35	622,3	704,85
Z-547409.ASKL	81	**580**	750	85	6	595	620
Z-546867.ASKL	125	**593,699**	790,575	117,729	6,5	650,748	720,725
Z-547644.ASKL	139	**593,725**	790,575	117,475	6,35	650,875	720,725
Z-547563.ASKL	140	**593,725**	790,575	117,475	6,35	650,875	720,725
Z-547565.ASKL	194	**606,425**	847,725	133,35	6,35	688,975	739,775
Z-547564.ASKL	189	**606,425**	847,725	133,35	6,35	688,975	739,775
Z-547645.ASKL	197	**609,6**	850,9	133,35	3,2	692,15	742,95



Basic load ratings		Minimum load factor	Limiting speed
dyn. C_a kN	stat. C_{0a} kN	A –	n_G min^{-1}
340	1 480	6,3	2 000
245	865	4,8	1 900
465	2 130	12	1 800
390	1 950	10	1 800
495	2 550	17	1 600
670	3 400	34	1 500
400	1 760	19	900
540	2 750	28	1 400
620	3 000	53	1 100
375	1 700	20	1 300
425	1 960	24	1 300
650	3 750	40	1 400
735	3 250	75	1 000
735	3 450	90	900
375	1 830	20	1 300
1 270	8 500	170	1 200
1 330	9 400	160	1 000
690	4 250	38	1 200
465	2 320	32	1 100
1 020	4 650	56	850
1 160	7 200	120	630
640	2 850	70	900
865	4 400	110	900
630	3 350	75	900
900	4 900	150	850
720	4 150	110	950
1 080	5 500	75	800
610	3 000	80	850
880	5 000	140	850
780	4 150	130	800
800	4 400	130	800
1 570	11 200	320	850

Axial angular contact ball bearings

Single direction

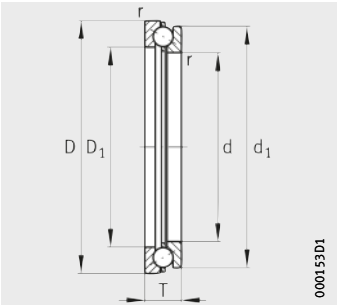

Dimension table (continued) · Dimensions in mm

Designation	Mass	Dimensions					
	m	d	D	T	r	D_1	d_1
	≈kg				min.		
Z-547646.ASKL	157	**622,3**	831,85	117,475	6,35	679,45	742,95
Z-547647.ASKL	159	**622,3**	831,85	117,475	6,35	679,45	742,95
Z-547410.ASKL	161	**635**	855	110	6	720	770
Z-547648.ASKL	84,4	**641,35**	793,75	88,9	6,35	708,025	746,125
Z-544553.ASKL	65,9	**641,426**	793,75	133,35	6,35	727,075	790,575
Z-547650.ASKL	180	**660,35**	895,35	133,604	6,35	727,075	790,575
Z-547649.ASKL	209	**660,4**	895,35	133,35	6,35	727,075	790,575
Z-547650.ASKL	205	**667,69**	914,4	127	6,35	768,35	806,45
Z-547651.ASKL	293	**723,9**	977,9	168,275	6,35	825,5	876,3
Z-544552.ASKL	84,7	**768,045**	920,75	89,281	6,35	835,025	873,12
Z-547653.ASKL	254	**768,35**	1 006,475	139,7	6,35	838,2	901,7
Z-547654.ASKL	250	**768,604**	1 006,475	139,7	6,35	838,2	907,1
Z-546866.ASKL	47,8	**771,449**	898,525	63,881	6,5	809,625	860,425
Z-547655.ASKL	110	**785,825**	952,5	95,25	6,35	857,25	882,65
Z-547656.ASKL	216	**787,4**	1 006,475	127	6,35	850,9	908,05
Z-547657.ASKL	237	**787,4**	1 025,525	139,7	6,35	893,75	917,575
Z-547658.ASKL	237	**787,4**	1 025,525	139,7	6,35	893,75	917,575
Z-544551.ASKL	193	**787,4**	1 025,525	139,954	6,35	893,775	917,575
Z-546865.ASKL	204	**806,399**	1 025,525	127,254	6,5	872,998	933,577
Z-543689.ASKL	218	**806,45**	1 025,525	127	6,35	873,125	933,45
Z-541269.ASKL	171	**1 020**	1 180	100	6	1 035	1 165
Z-547241.ASKL	132	**1 022,223**	1 181,1	89,154	6,5	1 069,975	1 133,475
Z-546864.ASKL	118	**1 022,223**	1 181,1	89,154	6,5	1 069,975	1 133,475
Z-560354.ASKL	448	**1 030**	1 290	160	10	1 080	1 240
Z-547242.ASKL	285	**1 041,273**	1 260,475	127,254	6,35	1 112,825	1 189,025
Z-546863.ASKL	257	**1 066,673**	1 285,875	127,38	6,5	1 138,098	1 214,552
Z-525290.ASKL	253	**1 073,15**	1 295,4	114,3	6,35	1 136,65	1 193,8
Z-540716.ASKL	208	**1 330**	1 490	110	6	1 345	1 475
Z-546862.ASKL	165	**1 364,123**	1 517,65	105,156	6,5	1 406,525	1 457,325
Z-546861.ASKL	385	**1 371,523**	1 619,25	140,081	6,5	1 457,325	1 533,525

Basic load ratings		Minimum load factor	Limiting speed
dyn. C_a kN	stat. C_{0a} kN	A –	n_G min^{-1}
830	4 650	140	800
915	5 000	170	800
1 170	8 000	220	800
670	3 800	90	850
940	6 400	110	850
1 560	11 300	300	750
1 080	6 400	240	700
1 000	5 700	220	700
1 850	14 800	530	700
1 030	8 100	150	500
1 200	7 800	360	630
830	5 100	190	670
800	7 200	75	560
850	7 100	130	800
1 020	6 300	280	630
850	5 200	200	670
1 140	7 500	340	630
1 670	13 500	400	450
1 460	8 800	190	450
900	5 850	220	670
1 060	9 500	320	600
980	8 400	240	400
1 320	13 200	240	600
1 630	14 700	750	530
1 590	14 000	670	380
1 600	11 400	320	360
1 350	13 400	450	560
950	9 150	530	480
1 310	14 800	360	450
2 360	29 000	1 100	430

FAG

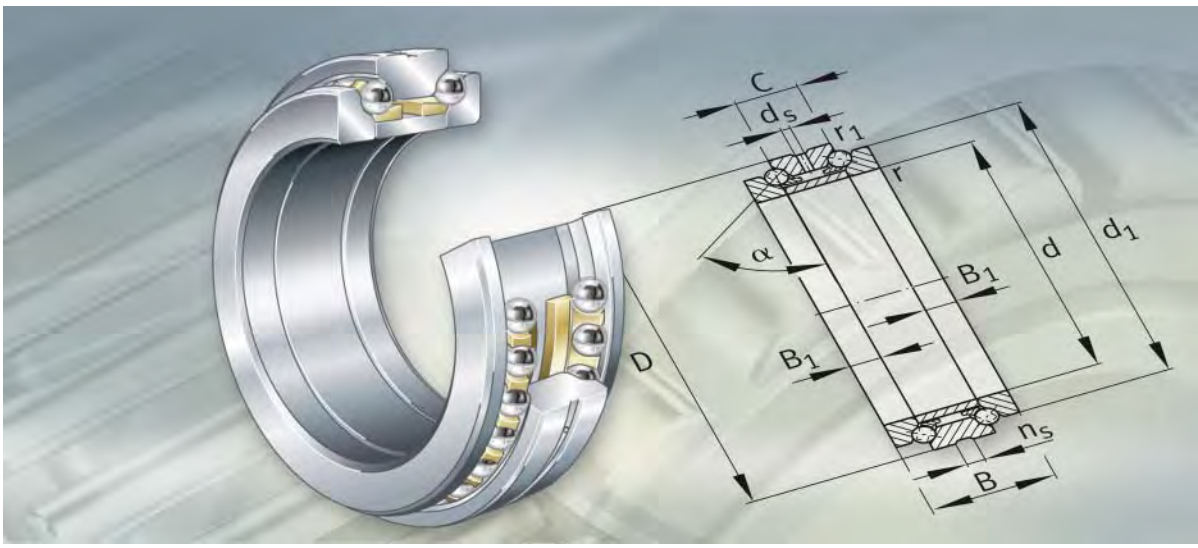

Double direction
axial angular contact ball bearings

Double direction axial angular contact ball bearings

		Page
Product overview	Double direction axial angular contact ball bearings	762
Features	Super precision bearings	763
	Bearings for rotary tables	764
	Operating temperature	764
	Cages	764
	Suffixes	764
Design and safety guidelines	Equivalent dynamic bearing load	765
	Operating life of high precision bearings	765
	Equivalent static bearing load	766
	Static load safety factor	766
	Speeds of high precision bearings	766
	Preload of high precision bearings	766
	Design of bearing arrangements for high precision bearings	766
Accuracy	Bearing series 2344, 2347	767
	Bearings for rotary tables	768
Dimension tables	Axial angular contact ball bearings, double direction, super precision bearings	770
	Axial angular contact ball bearings, double direction, for rotary tables	772

Double direction axial angular contact ball bearings

Super precision bearings for machine tools

2344, 2347

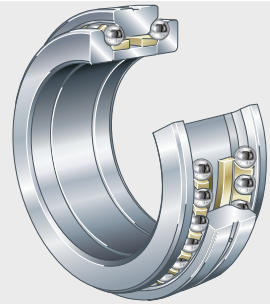

Bearings for rotary tables

Z-5..ASKL2

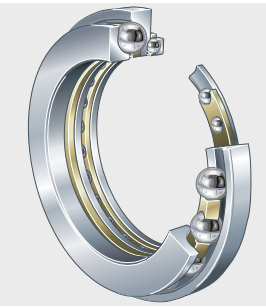

Double direction axial angular contact ball bearings



Features

Double direction axial angular contact ball bearings are available as super precision bearings for machine tools as well as rotary table bearings for drilling rigs.

Super precision bearings

Double direction axial angular contact ball bearings of series 2344 and 2347 are super precision bearings with restricted tolerances corresponding to class SP.
They comprise solid shaft locating washers, a spacer ring, a housing locating washer and ball and cage assemblies with solid brass cages. The bearing parts are matched to each other and can be mounted separately, but must not be interchanged with parts from bearings of the same size. The contact angle is 60°. As a result, these highly rigid axial angular contact ball bearings can support high axial forces in both directions.

The double direction precision bearings are therefore particularly suitable for precision spindle bearing arrangements in machine tools. In this case, the axial angular contact ball bearing is combined with a double row cylindrical roller bearing with a tapered bore, which supports the radial forces.

Axial angular contact ball bearings in a super precision design of series 2344 can be mounted on the small diameter of the shaft taper, while those of series 2347 can be mounted on the large diameter of the shaft taper.

These series have the same nominal outside diameter as cylindrical roller bearings NN30..-AS-K. However, the outside diameter tolerance is designed to give a loose fit when the seats of the axial angular contact ball bearing and the cylindrical roller bearing are machined together.

Sealing

The super precision bearings are not sealed.

Lubrication

They can be lubricated using oil or grease. Higher speeds can be achieved with oil lubrication. In order to allow oil to flow between the two rows of balls, the housing locating washer has a lubrication groove and lubrication holes.

At high speeds, overlubrication of the radial bearing can be prevented if the installation space is separated from that of the axial angular contact ball bearing.

Double direction axial angular contact ball bearings

Bearings for rotary tables

Double direction axial angular contact ball bearings for rotary tables comprise an upper bearing capable of supporting loads and a smaller bearing that fulfils the counterstay function. The bearing unit with low section height has a joint shaft locating washer, a large upper shaft locating washer and small lower shaft locating washer as well as two solid brass cages with balls. The raceways are machined into the bearing washers. Due to the large number of balls, the bearings have high rigidity.

These double direction axial angular contact ball bearings have non-standardised inch size dimensions and designations (Z-5..ASKLZ). The bearings are separable. The bearing washers and the cage can be mounted separately.

Double direction axial angular contact ball bearings for rotary tables can support axial forces in both directions at moderate speeds as well as radial and moment loads. They can therefore be used as single bearings.

Sealing

Double direction axial angular contact ball bearings for rotary tables are not sealed.

Lubrication

Due to the vertical bearing axis, we recommend the use of oil lubrication so that all contact points in the bearing are continuously supplied with sufficient quantities of lubricant.

Operating temperature

The double direction axial angular contact ball bearings can be used at operating temperatures from –30 °C to +150 °C.

Cages

In the super precision bearings, each row of rolling elements has a ball-guided solid brass cage. The cage is indicated by the suffix M and, together with the lubrication, has a considerable influence on the speed suitability of the bearing.

The solid brass cages in the bearings for rotary tables are guided on the shaft locating washer or on the housing locating washer.

Suffixes

Suffixes for available designs of super precision bearings: see table.

Available designs

Suffix[1)]	Description	Design
M	Solid brass cage, ball-guided	Standard
SP	Restricted tolerance class SP	
UP	Restricted tolerance class UP	Special design, available by agreement only

1) The design of the bearings for rotary tables with non-standardised designations (Z-5..ASKLZ) is available by agreement from us.

Design and safety guidelines

Equivalent dynamic bearing load

Double direction axial angular contact ball bearings, mounted adjacent to a cylindrical roller bearing, can support axial forces only. This also applies in general to the bearings for rotary tables.

For bearings under dynamic loading, the following applies:

$$P = F_a$$

P kN
Equivalent dynamic bearing load

F_a kN
Axial dynamic bearing load.

Operating life of super precision bearings

Super precision bearings must guide machine parts with very high precision and support forces at very high speeds.

They are selected predominantly from the perspectives of:

- accuracy
- rigidity
- running behaviour.

In order that they can fulfil these tasks for as long as possible, the bearings must run without wear. The precondition for this is the creation of a load-bearing hydrodynamic lubricant film at the contact points of the rolling contact partners.
Under these conditions, rolling bearings will achieve their fatigue life in a large number of applications. If the design is appropriate to the fatigue life, the operating life of the bearing is normally restricted by the lubricant operating life.

The decisive factors for the operating life from the perspective of load are the Hertzian pressures occurring at the contacts and the bearing kinematics. For high performance assemblies, individual design with the aid of special calculation programs is therefore advisable.

Since failure as a result of fatigue plays no part in practice in the case of super precision bearings, calculation of the rating life L_{10} in accordance with DIN ISO 281 is not suitable as a means of determining the operating life.

Double direction axial angular contact ball bearings

Equivalent static bearing load

Double direction axial angular contact ball bearings, mounted adjacent to a cylindrical roller bearing, can support axial forces only. This also applies in general to the bearings for rotary tables.

For bearings under static loading, the following applies:

$$P_0 = F_{0a}$$

P_0 kN
Equivalent static bearing load

F_{0a} kN
Axial static bearing load.

Static load safety factor

In order to achieve sufficiently smooth running of the super precision bearings, a static load safety factor $S_0 \geqq 2{,}5$ is required:

$$S_0 = \frac{C_{0a}}{P_0}$$

S_0 –
Static load safety factor

C_{0a} kN
Basic static load rating, see dimension tables

P_0 kN
Equivalent static bearing load.

Speeds of super precision bearings

Double direction axial angular contact ball bearings of a super precision design are suitable for high speeds. Under certain circumstances, the high values may not be achieved if the cylindrical roller bearing arranged adjacent to the axial angular contact ball bearing is preloaded.

The limiting speeds n_G given in the dimension tables are valid for lubrication with grease or for minimal quantity lubrication with oil and must not be exceeded.

Preload of super precision bearings

The preload is determined by the spacer ring arranged between the two shaft locating washers.

Design of bearing arrangements for super precision bearings

Shaft and housing tolerances

Guide values for the machining tolerances of the bearing seats, see Catalogue SP 1, Super Precision Bearings.

Mounting dimensions

The dimension tables give the maximum dimensions of the radii r_a and the diameters of the abutment surfaces d_a, D_a.

Accuracy
Bearing series 2344, 2347

The dimensional and running tolerances of the super precision bearings correspond to tolerance class SP according to Schaeffler, see tables.
Bearings to tolerance class UP are available by agreement.

Tolerances for shaft locating washer

Bore d mm		Bore deviation Δ_{dmp} µm		Variation V_{dp} µm	Wall thickness variation S_i µm	Height deviation Δ_{Hs} µm	
over	incl.	min.	max.			min.	max.
180	250	–22	0	17	5	–400	+175
250	315	–25	0	19	7	–450	+200
315	400	–30	0	22	7	–600	+250
400	500	–35	0	26	9	–750	+300

Tolerances for housing locating washer

Outside diameter D mm		Outside diameter deviation Δ_{Dmp} µm		Variation V_{Dp} µm	Wall thickness variation S_e µm
over	incl.	min.	max.		
250	315	–73	–41	12	The wall thickness variation S_e for the housing locating washer is identical to S_i for the shaft locating washer
315	400	–82	–46	13	
400	500	–90	–50	15	
500	630	–99	–55	16	

Double direction
axial angular contact ball bearings

Bearings for rotary tables

The normal tolerances of the bearings for rotary tables are given in the following tables.

Tolerances for shaft locating washer

Bore d mm		Bore deviation Δ_{dmp} µm	
over	incl.		
500	630	0	−51
630	800	0	−76
800	1 000	0	−102
1 000	1 250	0	−127
1 250	1 600	0	−165

Tolerances for housing locating washer

Outside diameter D mm		Outside diameter deviation Δ_{Dmp} µm	
over	incl.		
630	800	0	−76
800	1 000	0	−102
1 000	1 250	0	−127
1 250	1 600	0	−165

Tolerances for nominal bearing height

Bore d mm		Deviation of nominal bearing height Δ_{Ts} µm	
over	incl.		
500	630	+381	−381
630	800	+381	−381
800	1 000	+381	−381
1 000	1 250	+381	−381
1 250	1 600	+381	−381



Axial angular contact ball bearings

Double direction
Super precision bearings

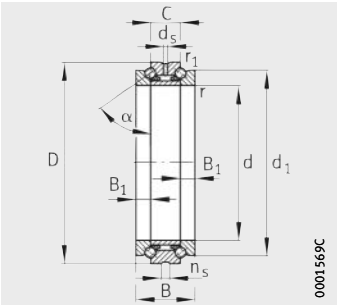

Contact angle α = 60°

Dimension table · Dimensions in mm

Designation	Mass	Dimensions									
	m	d	D	B	C	d_1	B_1	r	r_1	d_s	n_s
	≈kg							min.	min.		
234444-M-SP	36,9	**220**	340	144	72	304	36	3	1,1	9,5	17,7
234744-M-SP	35,3	**228**	340	144	72	304	36	3	1,1	9,5	17,7
234448-M-SP	38,9	**240**	360	144	72	322	36	3	1,1	9,5	17,7
234748-M-SP	37,2	**248**	360	144	72	322	36	3	1,1	9,5	17,7
234452-M-SP	56,5	**260**	400	164	82	354	41	4	1,5	9,5	17,7
234752-M-SP	54,1	**269**	400	164	82	354	41	4	1,5	9,5	17,7
234456-M-SP	57,1	**280**	420	164	82	374	41	4	1,5	9,5	17,7
234756-M-SP	54,5	**289**	420	164	82	374	41	4	1,5	9,5	17,7
234460-M-SP	90,7	**300**	460	190	95	406	47,5	4	1,5	9,5	17,7
234760-M-SP	86,5	**310**	460	190	95	406	47,5	4	1,5	9,5	17,7
234464-M-SP	90,3	**320**	480	190	95	426	47,5	4	1,5	9,5	17,7
234764-M-SP	86,5	**330**	480	190	95	426	47,5	4	1,5	9,5	17,7
234468-M-SP	122	**340**	520	212	106	459	53	4	1,5	9,5	17,7
234768-M-SP	117	**350**	520	212	106	459	53	4	1,5	9,5	17,7
234472-M-SP	128	**360**	540	212	106	479	53	4	1,5	9,5	17,7
234772-M-SP	123	**370**	540	212	106	479	53	4	1,5	9,5	17,7
234476-M-SP	133	**380**	560	212	106	499	53	4	1,5	9,5	17,7
234776-M-SP	128	**390**	560	212	106	499	53	4	1,5	9,5	17,7
234480-M-SP	198	**400**	600	236	118	532	59	5	2	9,5	17,7
234780-M-SP	187	**410**	600	236	118	532	59	5	2	9,5	17,7
2344/500-M-SP	307	**500**	720	256	128	650	64	6	3	9,5	17,7
2347/500-M-SP	283	**515**	720	256	128	650	64	6	3	9,5	17,7

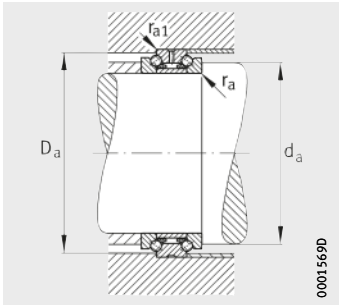

Mounting dimensions

Mounting dimensions				Basic load ratings		Fatigue limit load	Limiting speed	
d_a h12	D_a H12	r_a max.	r_{a1} max.	dyn. C_a kN	stat. C_{0a} kN	C_{ua} kN	n_G grease min^{-1}	n_G oil min^{-1}
269	318	2,5	1	340	1 330	71	1 600	2 200
269	318	2,5	1	340	1 330	71	1 600	2 200
289	338	2,5	1	350	1 420	73	1 500	2 000
289	338	3	1	350	1 420	73	1 500	2 000
317,5	374,5	3	1,5	400	1 680	83	1 400	1 900
317,5	374,5	3	1,5	400	1 680	83	1 400	1 900
337,5	394,5	3	1,5	415	1 790	86	1 300	1 800
337,5	394,5	3	1,5	415	1 790	86	1 300	1 800
366	428,5	3	1,5	480	2 170	99	1 200	1 700
366	428,5	3	1,5	480	2 170	99	1 200	1 700
386	448,5	3	1,5	495	2 310	103	1 200	1 700
386	448,5	3	1,5	495	2 310	103	1 200	1 700
413	485,5	3	1,5	580	2 850	124	1 100	1 600
413	485,5	3	1,5	580	2 850	124	1 100	1 600
433	505,5	3	1,5	590	2 950	125	1 000	1 500
433	505,5	3	1,5	590	2 950	125	1 000	1 500
453	525,5	3	1,5	610	3 150	130	1 000	1 500
453	525,5	4	1,5	610	3 150	130	1 000	1 500
480	561,5	4	2	680	3 650	147	900	1 300
480	561,5	4	2	680	3 650	147	900	1 300
591	680	6	3	800	4 800	174	750	1 000
591	680	6	3	800	4 800	174	750	1 000

Axial angular contact ball bearings

Double direction
For rotary tables

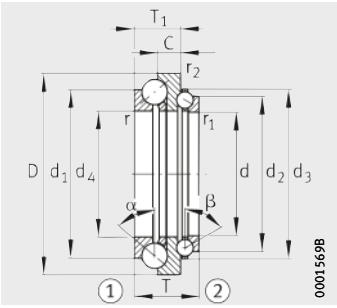

Dimension table · Dimensions in mm

Designation	Mass	Dimensions						
	m	d	D	T	T_1	C	d_1	d_2
	≈kg							
Z-542060.ASKLZ	175	**507,9**	742,95	170,3	127	63,5	679,5	587,4
Z-542475.ASKLZ	320	**786,917**	1 006,2	197,74	139,547	69,85	901,7	999,2
Z-563286.ASKLZ	624	**1 371,473**	1 597,025	248,412	168,275	78,588	1 489,1	1 536,7

					Contact angle		Basic load ratings			
							Bearing ①		Bearing ②	
d_3	d_4	r min.	r_1 min.	r_2 min.	α °	β °	dyn. C_a kN	stat. C_{0a} kN	dyn. C_a kN	stat. C_{0a} kN
616	507,9	5	2,5	2	45	60	830	3 800	390	1 760
–	792	5	5	1,8	50	60	1 160	7 650	800	5 600
1 481,1	1 374,6	5	5	5	50	60	1 460	13 700	915	8 800

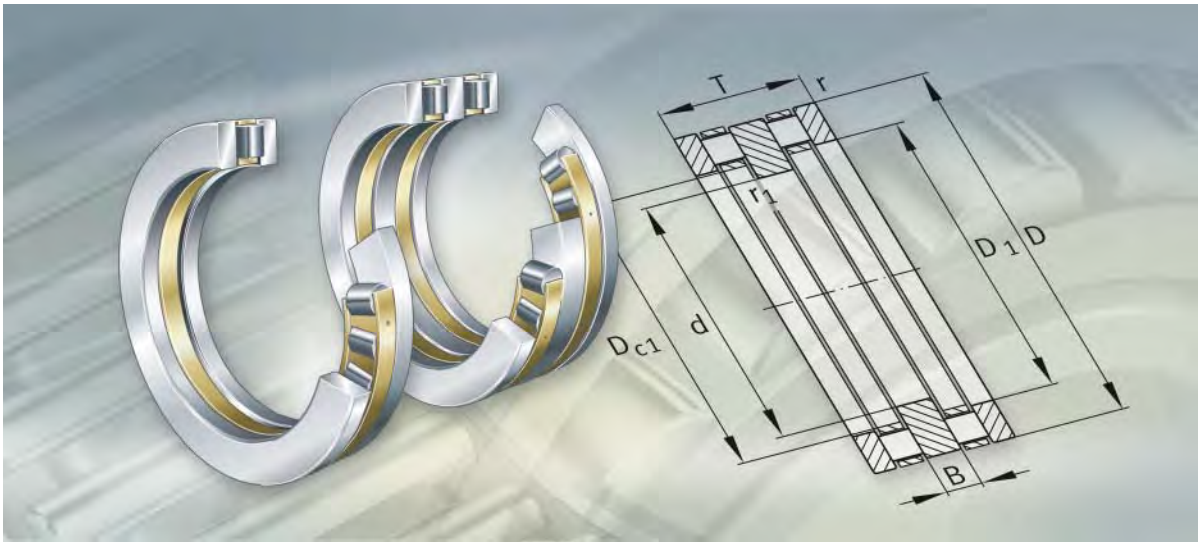

Axial cylindrical roller bearings

Single direction
Double direction

Axial cylindrical roller bearings

		Page
Product overview	Axial cylindrical roller bearings	776
Features	Single direction bearings	777
	Double direction bearings	777
	Operating temperature	778
	Cages	778
	Suffixes	778
Design and safety guidelines	Equivalent dynamic bearing load	779
	Equivalent static bearing load	779
	Minimum axial load	779
	Limiting speed	780
	Design of adjacent parts	780
Accuracy		781
Dimension tables	Axial cylindrical roller bearings, single direction, single row and double row	782
	Axial cylindrical roller bearings, split, single direction, double row and triple row	788
	Axial cylindrical roller bearings, double direction	790

Single direction

Single row or double row

811, 812, Z-5..AR1



894, Z-5..AR1

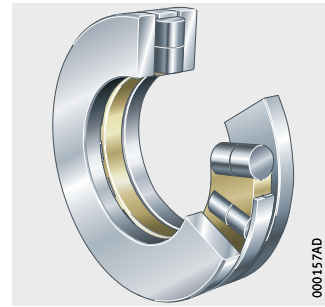

Split

Double row or triple row

Z-5..AR1-01

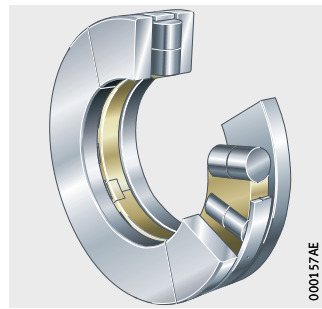

Double direction

Z-5..AR2

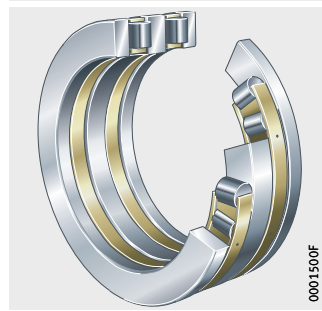

Axial cylindrical roller bearings

Features

Axial cylindrical roller bearings have a low axial section height, high load capacity and high rigidity. Depending on the design, they can support axial forces in one direction or in both directions. Radial forces must be supported by separate means.



Single direction bearings

Single direction axial cylindrical roller bearings comprise an axial cylindrical roller and cage assembly, an externally centred housing locating washer and an internally centred shaft locating washer. The bore diameter, outside diameter and running surface of the housing locating washer and the shaft locating washer are precision machined.

The bearings can support axial forces in one direction.

Bearings 811, 812 are of a single row design and correspond to DIN 722/ISO 104, bearings 894 are of a double row design to DIN 616/ISO 104.

Bearings with the designation Z-5..AR have non-standardised dimensions and designations.

Split bearings

Split axial cylindrical roller bearings are used for bearing positions that are difficult to access. They are mounted, for example, together with split radial cylindrical roller bearings in air preheaters. The bearings have two or three rows of rollers. The main dimensions and designations (Z-5..AR) of these bearings are not standardised.

Double direction bearings

Double direction axial cylindrical roller bearings comprise two axial cylindrical roller and cage assemblies, two externally centred housing locating washers and an internally centred intermediate washer. The bore diameter, outside diameter and running surface of the housing locating washers and the intermediate washer are precision machined. The intermediate washer is guided on the shaft and must be rigidly clamped in place.

Double direction axial cylindrical roller bearings can support axial forces in both directions.

The main dimensions and designations (Z-5..AR) of these bearings are not standardised.

Operating temperature

Axial cylindrical roller bearings and axial cylindrical roller and cage assemblies can be used at operating temperatures from –30 °C to +150 °C.

Cages

The bearings generally have brass cages. These are indicated in bearings of series 811 and 812 as well as 894 by the suffix M. We can provide information on the cage design in special bearings by agreement.

Suffixes

Suffixes for available designs of standardised bearings: see table.

Available designs

Suffix[1)]	Description	Design
M	Brass cage	Standard
P5	High dimensional, geometrical and running accuracy	Special design, available by agreement only

1) The design of the bearings with non-standardised designations (Z-5) is available by agreement from us.

Design and safety guidelines

Equivalent dynamic bearing load

Axial cylindrical roller bearings can support axial forces only.

For bearings under dynamic loading, the following applies:

$$P = F_a$$

P kN
Equivalent dynamic bearing load
F_a kN
Axial dynamic bearing load.

Equivalent static bearing load

Axial cylindrical roller bearings can support axial forces only.

For bearings under static loading, the following applies:

$$P_0 = F_{0a}$$

P_0 kN
Equivalent static bearing load
F_{0a} kN
Axial static bearing load.

Minimum axial load

In order to ensure reliable operation, the minimum axial load $F_{a\,min}$ in accordance with the equation must be applied:

$$F_{a\,min} = 0{,}0005 \cdot C_{0a} + k_a \left(\frac{C_{0a} \cdot n}{10^8} \right)^2$$

$F_{a\,min}$ N
Minimum axial load
k_a –
Factor for determining the minimum load, see table
C_{0a} N (observe the dimension)
Basic static load rating
n min^{-1}
Speed.

Factor k_a

Series	Factor k_a [1)]
811	1,4
812	0,9
894	0,5

1) We can provide k_a values for non-standardised bearings by agreement.

Limiting speed

The limiting speeds n_G given in the product tables are valid for oil lubrication. With grease lubrication, the permissible value is 25% of the value given in the table.

Design of adjacent parts

Axial bearing washers must be fully supported over their entire surface.

The abutment shoulders should be rigid, flat and perpendicular to the axis of rotation.

The radial cage guidance surfaces must be precision machined and wear-resistant (R_z4 ($R_a0{,}8$)).

If axial cylindrical roller and cage assemblies run directly on the adjacent construction, the running surfaces must be produced as rolling bearing raceways.

The surface hardness of the raceway must be 670 HV + 70 HV and the hardening depth CHD or SHD must be sufficiently deep.

Tolerances for shafts and housing bores

Tolerances for shafts and housing bores: see table.

Shaft and housing bore tolerances

Bearing component		Shaft tolerance	Bore tolerance
Cage	Shaft guided	h8	–
Housing locating washer	–	–	H9
Shaft locating washer	–	h8	–

Orientation of washers

The axial bearing washers must be fitted with the raceway side facing the rolling elements.

On housing locating washers, the raceway side is indicated by the smaller chamfer on the outside diameter.

On shaft locating washers, the raceway side is indicated by the smaller chamfer on the bore diameter.

Accuracy

The dimensional and running tolerances of axial bearing washers GS and WS correspond to tolerance class PN to DIN 620.

Tolerances for the bore diameter and outside diameter as well as the width of the bearing components are shown in the table and *Figure 1*.

Tolerances for bearing components

Series	Tolerance					
	Bore		Outside diameter		Height	
K811 K812 K894	D_{c1}	E11[1)]	D_c	a13[1)]	D_w	to DIN 5 402-1
GS811 GS812 GS894	D_1	–	D	to DIN 620	B	h11
WS811 WS812 WS894	d	to DIN 620	d_1	–	B	h11

1) Deviation from mean diameter.

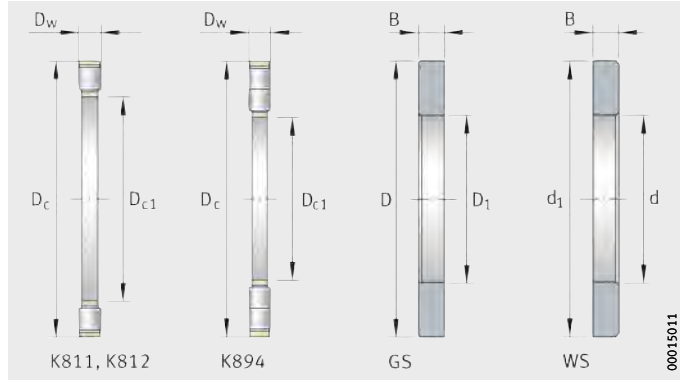

Figure 1
Bearing components

We can provide the tolerances for non-standardised bearings by agreement.

Axial cylindrical roller bearings

Single direction
Single row and double row

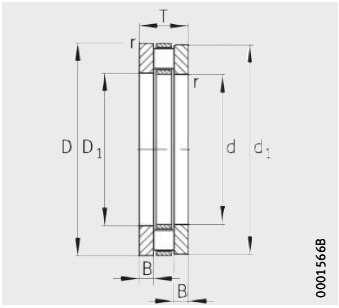

Design 1
Single row

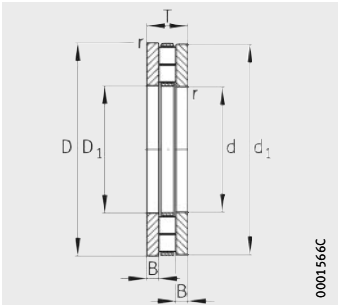

Design 2
Double row

Dimension table · Dimensions in mm

Designation	Design	Mass	Dimensions					
		m	d	D	T	B	r	D_1
		≈kg					min.	
89432-M	2	42	**160**	320	95	31,5	5	164
89434-M	2	51,9	**170**	340	103	34,5	5	174
89436-M	2	60	**180**	360	109	36,5	5	184
89438-M	2	72,1	**190**	380	115	38,5	5	195
89440-M	2	82,6	**200**	400	122	41	5	205
89444-M	2	90,1	**220**	420	122	41	6	225
81248-M	1	26,2	**240**	340	78	23	2,1	244
89448-M	2	95,9	**240**	440	122	41	6	245
81152-M	1	9,08	**260**	320	45	13,5	1,5	263
81252-M	1	28,6	**260**	360	79	23,5	2,1	264
89452-M	2	125	**260**	480	132	44	6	265
81156-M	1	12,6	**280**	350	53	15,5	1,5	283
81256-M	1	31	**280**	380	80	24	2,1	284
89456-M	2	159	**280**	520	145	48,5	6	285
Z-548745.AR	1	52,2	**285**	430	95	25	4	285
81160-M	1	19,4	**300**	380	62	18,5	2	304
81260-M	1	48,25	**300**	420	95	28,5	3	304
89460-M	2	170	**300**	540	145	48,5	6	305
81164-M	1	20,7	**320**	400	63	19	2	324
81264-M	1	46,9	**320**	440	95	28,5	3	325
89464-M	2	203	**320**	580	155	43,5	7,5	325
Z-525487.AR	4	70,7	**330**	495	89	28,5	2,1	330
81168-M	1	21,3	**340**	420	64	19,5	2	344
81268-M	1	50	**340**	460	96	29	3	345
89468-M	2	257	**340**	620	170	49	7,5	345
81172-M	1	22,5	**360**	440	65	20	2	364
81272-M	1	71,4	**360**	500	110	32,5	4	365
89472-M	2	267	**360**	640	170	49	7,5	365
81176-M	1	27,7	**380**	460	65	20	2	384
81276-M	1	76,5	**380**	520	112	33,5	4	385
89476-M	2	298	**380**	670	175	49,5	7,5	385
81180-M	1	24,7	**400**	480	65	20	2	404
81280-M	1	79,4	**400**	540	112	33,5	4	405
89480-M	2	353	**400**	710	185	52,5	7,5	405

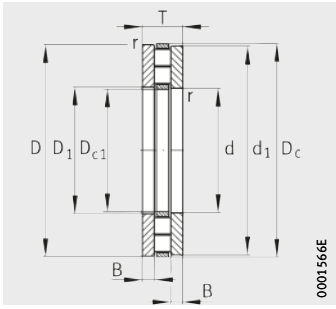

Design 4
Double row

			Basic load ratings		Fatigue limit load	Limiting speed	Reference speed
d_1	D_c	D_{c1}	dyn. C_a	stat. C_{0a}	C_{ua}	n_G	n_B
			kN	kN	kN	min^{-1}	min^{-1}
320	–	–	1 780	6 500	590	1 170	410
340	–	–	1 990	7 400	660	1 100	375
360	–	–	2 210	8 200	720	1 050	335
380	–	–	2 460	9 200	800	1 010	330
400	–	–	2 700	10 200	880	960	305
420	–	–	2 900	11 500	980	880	270
335	–	–	1 370	5 000	445	970	340
440	–	–	3 000	12 200	1 030	850	250
317	–	–	620	2 650	219	990	390
355	–	–	1 440	5 400	475	910	310
480	–	–	3 600	14 700	1 200	780	224
347	–	–	870	3 650	305	910	330
375	–	–	1 460	5 600	485	860	295
520	–	–	4 250	17 600	1 420	700	199
430	–	–	2 160	7 500	600	900	–
376	–	–	1 070	4 500	370	840	300
415	–	–	1 930	7 300	620	780	265
540	–	–	4 350	18 500	1 480	670	188
396	–	–	1 100	4 750	385	800	280
435	–	–	1 960	7 600	630	740	250
575	–	–	5 500	19 900	1 460	640	185
495	493,5	318	2 360	11 000	810	750	–
416	–	–	1 130	5 000	400	750	265
455	–	–	2 060	8 300	680	710	229
615	–	–	6 200	2 270	1 620	600	171
436	–	–	1 140	5 100	405	710	255
495	–	–	2 700	10 700	860	650	202
635	–	–	6 500	24 500	1 720	570	158
456	–	–	1 170	5 400	420	680	238
515	–	–	2 750	11 100	880	620	193
665	–	–	7 000	26 500	1 860	540	149
476	–	–	1 200	5 700	435	650	224
535	–	–	2 800	11 500	910	600	184
705	–	–	7 800	30 000	2 070	520	138

Axial cylindrical roller bearings

Single direction
Single row and double row

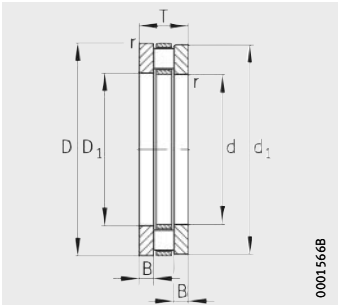

Design 1
Single row

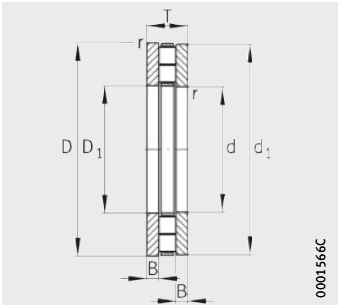

Design 2
Double row

Dimension table (continued) · Dimensions in mm

Designation	Design	Mass	Dimensions					
		m	d	D	T	B	r	D_1
		≈kg					min.	
81184-M	1	25,7	**420**	500	65	20	2	424
81284-M	1	112	**420**	580	130	39	5	425
89484-M	2	369	**420**	730	185	52,5	7,5	425
Z-525488.AR	4	71,1	**431,4**	571,4	89	28,5	4	431,4
81188-M	1	40,2	**440**	540	80	24	2,1	444
81288-M	1	117	**440**	600	130	39	5	445
89488-M	2	484	**440**	780	206	59	9,5	445
Z-560390.01.AR	3	24,3	**460**	540	54	18	2	463
81192-M	1	51,9	**460**	560	80	24	2,1	464
81292-M	1	120	**460**	620	130	39	5	465
89492-M	2	496	**460**	800	206	59	9,5	465
81196-M	1	45,2	**480**	580	80	24	2,1	484
81296-M	1	139	**480**	650	135	39,5	5	485
89496-M	2	619	**480**	850	224	64	9,5	485
Z-525141.AR	4	144	**482,6**	673,1	114,3	34,65	5	482,6
811/500-M	1	54,2	**500**	600	80	24	2,1	505
812/500-M	1	144	**500**	670	135	39,5	5	505
894/500-M	2	626	**500**	870	224	64	9,5	505
Z-560076.AR	1	12,6	**530**	590	36	11,5	2	532
811/530-M	1	58,2	**530**	640	85	25,5	3	535
Z-525429.AR	1	140	**530**	710	120	30	4	535
812/530-M	1	169	**530**	710	140	40	5	535
894/530-M	2	736	**530**	920	236	65,5	9,5	535
811/560-M	1	61,8	**560**	670	85	25,5	3	565
812/560-M	1	202	**560**	750	150	45	5	565
Z-547234.AR	4	168	**572**	763	115	35	5	572
Z-560401.AR	3	28,4	**585**	665	54	18	3	588
811/600-M	1	65,3	**600**	710	85	25,5	3	605
812/600-M	1	244	**600**	800	160	48	5	605
Z-545106.AR	4	176	**622,3**	812,8	114,3	32,15	5	622,3
811/630-M	1	81,2	**630**	750	95	28,5	3	635
812/630-M	1	311	**630**	850	175	53,5	6	635
Z-529071.AR	2	1 190	**630**	1 090	280	77,5	15	635
Z-529509.AR	2	323	**650**	930	130	40	4	650

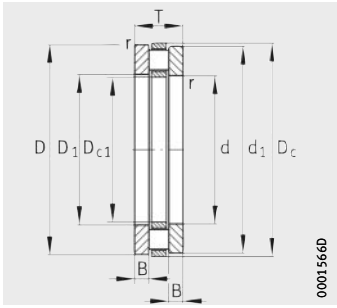

Design 3
Single row

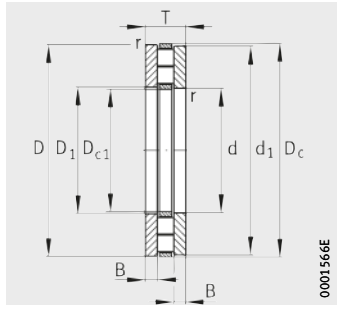

Design 4
Double row

			Basic load ratings		Fatigue limit load	Limiting speed	Reference speed
d_1	D_c	D_{c1}	dyn. C_a	stat. C_{0a}	C_{ua}	n_G	n_B
			kN	kN	kN	min^{-1}	min^{-1}
495	–	–	1 230	5 900	450	620	214
575	–	–	3 550	14 400	1 020	560	164
730	–	–	8 200	32 000	2 200	500	129
571,4	569,5	419,5	2 280	11 200	760	630	–
535	–	–	1 780	8 200	630	580	189
595	–	–	3 600	14 900	1 050	540	158
780	–	–	9 800	38 500	2 600	455	114
537	545	455,135	750	4 000	270	630	–
555	–	–	1 840	8 700	650	560	177
615	–	–	3 700	15 500	1 080	520	151
800	–	–	9 700	38 500	2 600	455	114
575	–	–	1 860	8 900	660	540	171
645	–	–	4 150	17 400	1 200	500	141
850	–	–	10 800	42 500	2 800	430	110
673,1	672	470,154	3 900	18 300	1 210	530	–
595	–	–	1 910	9 300	690	520	163
665	–	–	4 250	18 000	1 230	480	135
870	–	–	10 800	42 500	2 750	415	110
588	–	–	465	2 850	179	530	–
635	–	–	2 140	10 500	770	485	155
705	–	–	4 650	19 300	1 340	530	–
705	–	–	4 850	20 500	1 430	465	124
920	–	–	12 500	49 000	3 100	395	99
665	–	–	2 190	11 000	800	465	147
745	–	–	4 900	21 300	1 430	440	123
763	760	560	4 250	21 600	1 370	480	–
662	–	–	765	4 500	285	530	–
705	–	–	2 230	11 500	820	435	139
795	–	–	5 500	24 300	1 600	400	112
812,8	825,5	610,5	5 000	25 500	1 480	430	–
745	–	–	2 460	12 200	850	415	139
845	–	–	6 000	2 650	1 740	390	110
1 090	–	–	16 300	64 000	3 750	360	–
930	–	–	6 300	35 500	2 200	380	–

Axial cylindrical roller bearings

Single direction
Single row and double row

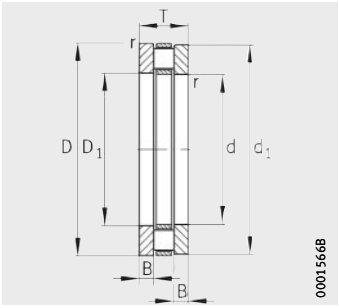

Design 1
Single row

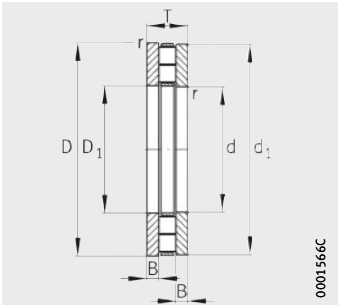

Design 2
Double row

Dimension table (continued) · Dimensions in mm

Designation	Design	Mass	Dimensions					
		m	d	D	T	B	r	D_1
		≈kg					min.	
811/670-M	1	209	**670**	800	105	32,5	4	675
812/670-M	1	352	**670**	900	180	54	6	675
Z-534632.AR	4	196	**673,303**	876,173	111,125	29,562	3	673,303
811/710-M	1	134	**710**	850	112	33,5	4	715
812/710-M	1	413	**710**	950	190	57	6	715
Z-530311.01.AR	4	343	**711,327**	964,514	127,127	39,56	7,5	711,327
811/750-M	1	160	**750**	900	120	36	4	755
812/750-M	1	464	**750**	1 000	195	57,5	6	755
Z-560389.01.AR	3	43,1	**760**	840	57	19	4	763
811/800-M	1	170	**800**	950	120	36	4	805
812/800-M	1	539	**800**	1 060	205	60	7,5	805
811/850-M	1	181	**850**	1 000	120	36	4	855
812/850-M	1	611	**850**	1 120	212	63,5	7,5	855
811/900-M	1	216	**900**	1 060	130	39	5	905
812/900-M	1	697	**900**	1 180	220	65	10	905
Z-560391.01.AR	3	63,7	**950**	1 050	60	20	4	953
811/950-M	1	252	**950**	1 120	135	41,5	5	955
812/950-M	1	837	**950**	1 250	236	70,5	10	955
811/1000-M	1	303	**1 000**	1 180	140	42	5	1 005
812/1000-M	1	1 010	**1 000**	1 320	250	75	12	1 007
811/1060-M	1	356	**1 060**	1 250	150	45	5	1 065
812/1060-M	1	1 210	**1 060**	1 400	265	77,5	9,5	1 065
811/1120-M	1	503	**1 120**	1 320	160	48	5	1 125
811/1180-M	1	541	**1 180**	1 400	175	52,5	6	1 185
Z-560392.AR	3	76,2	**1 205**	1 295	64	21,5	5	1 208
811/1250-M	1	538	**1 250**	1 460	175	52,5	6	1 255
812/1250-M	1	2 040	**1 250**	1 650	315	92,5	12	1 255
811/1800-M	1	1 430	**1 800**	2 080	220	65	7,5	1 810

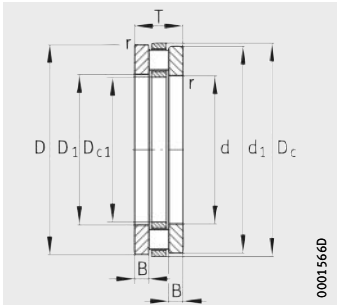

Design 3
Single row

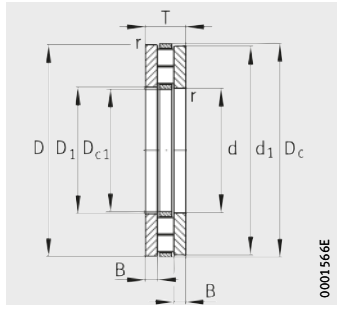

Design 4
Double row

			Basic load ratings		Fatigue limit load	Limiting speed	Reference speed
d_1	D_c	D_{c1}	dyn. C_a	stat. C_{0a}	C_{ua}	n_G	n_B
			kN	kN	kN	min^{-1}	min^{-1}
795	–	–	2 950	15 300	1 050	390	119
895	–	–	6 700	29 500	1 880	365	102
876,173	876	674,624	5 500	29 000	1 770	530	–
845	–	–	3 450	17 500	1 190	370	110
945	–	–	7 300	32 500	2 080	345	95
964,514	956	695,58	6 000	34 000	2 110	380	–
895	–	–	3 850	19 500	1 190	380	85
995	–	–	8 100	36 500	2 290	320	87
837	845	755	1 000	6 550	390	380	–
945	–	–	4 050	21 500	1 420	330	94
1 055	–	–	8 800	39 500	2 410	310	81
995	–	–	4 150	22 400	1 470	310	89
1 115	–	–	9 200	42 500	2 600	295	78
1 055	–	–	4 600	24 700	1 450	295	85
1 175	–	–	1 030	48 000	2 850	275	71
1 047	1 055	945	1 290	9 500	530	320	–
1 115	–	–	4 950	27 500	1 590	280	79
1 245	–	–	11 300	53 000	3 100	255	68
1 173	–	–	5 700	32 000	1 830	265	71
1 313	–	–	12 100	57 000	3 300	248	66
1 245	–	–	6 200	34 000	1 980	249	70
1 395	–	–	14 200	66 000	3 750	234	59
1 315	–	–	7 000	39 000	2 190	236	63
1 395	–	–	7 800	44 000	2 460	223	60
1 292	1 300	1 200	1 250	9 300	485	240	–
1 455	–	–	8 100	47 000	2 600	213	54
1 645	–	–	19 200	93 000	4 950	195	47
2 070	–	–	15 000	95 000	4 750	148	32

Axial cylindrical roller bearings

Split, single direction
Double row and triple row

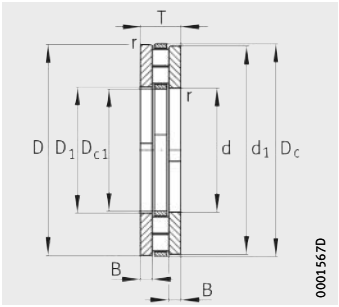

Design 1
Double row

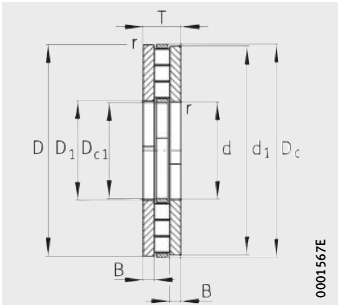

Design 2
Triple row

Dimension table · Dimensions in mm

Designation	Design	Mass	Dimensions				
		m	d	D	T	B	r
		≈kg					min.
Z-543424.AR	1	66,4	**330**	495,3	88,9	27,45	5
Z-528428.AR	2	233	**355,58**	660,55	133,4	44,7	5
Z-543509.AR	2	236	**365**	660,4	133,3	44,65	6
Z-543342.AR	1	144	**425**	635	114,3	35,15	10
Z-528429.AR	1	258	**475,235**	736,75	146,1	47,05	5
Z-543463.AR	1	265	**482**	736,6	146,1	47,05	7,5
Z-543809.AR	2	446	**635**	939,8	146	48	9,5



				Basic load ratings		Fatigue limit load	Limiting speed
D_1	d_1	D_c	D_{c1}	dyn. C_a kN	stat. C_{0a} kN	C_{ua} kN	n_G min^{-1}
330	495,3	495	317,5	2 280	10 000	750	750
373,635	658,14	671	356,05	4 550	21 600	1 470	600
365	658	680	355,6	4 550	21 600	1 470	600
425	635	635	406,4	3 800	17 600	1 050	600
475,235	736,75	745	457,735	5 200	24 500	1 670	530
482	736,6	746	457,2	5 200	24 500	1 670	530
635	939,8	981,3	533,545	6 800	39 000	2 370	400

Axial cylindrical roller bearings

Double direction

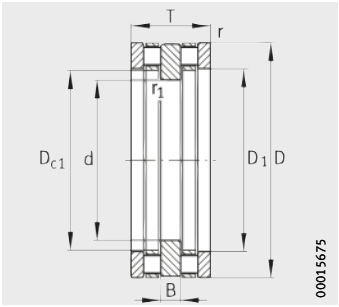

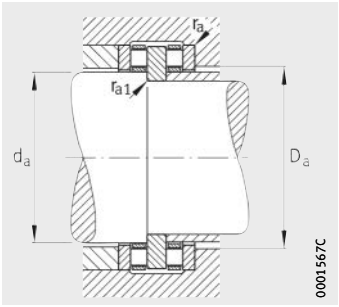

Mounting dimensions

Dimension table · Dimensions in mm

Designation	Mass	Dimensions								
	m	d	D	T	B	r	r_1	D_1	d_1	D_{c1} [1]
	≈kg					min.	min.			
Z-507120.AR	33,9	**240**	340	120	32	2,1	1,1	264	338	260
Z-507121.AR	35,1	**260**	360	120	32	2,1	1,1	284	358	280
Z-507122.AR	39,9	**280**	380	120	32	2,1	1,1	304	378	300
Z-507122.AR-MBS	37,3	**280**	380	120	32	2,1	1,1	304	378	300
Z-507123.AR	60	**300**	420	146	38	3	1,5	330	417	325
Z-507124.AR	64	**320**	440	146	38	3	1,5	350	437	345
Z-507125.AR	64,6	**340**	460	146	38	3	1,5	370	459	365
Z-507130.AR	141	**440**	600	190	50	5	3	485	597	475
Z-507131.AR	175	**460**	620	190	50	5	3	505	617	495,135
Z-507131.AR-MBS	175	**460**	620	190	50	5	3	505	617	495,135
Z-507132.AR	182	**480**	650	206	54	5	3	525	646	515,145
Z-507132.AR-MBS	182	**480**	650	206	54	5	3	525	646	515,145
Z-507133.AR	196	**500**	670	206	54	5	3	545	666	535
Z-507134.AR	224	**530**	710	218	57	5	3	580	706	567
Z-507134.AR-MBS	224	**530**	710	218	57	5	3	580	706	567
Z-507135.AR	271	**560**	750	230	60	5	3	615	746	600
Z-507136.AR	327	**600**	800	244	64	5	3	655	796	640
Z-507137.AR	411	**630**	850	264	70	8	5	690	845	675
Z-507138.AR	479	**670**	900	280	75	6	4	735	895	720
Z-507140.AR	623	**750**	1 000	300	80	6	4	820	995	805
Z-507141.AR	708	**800**	1 060	310	82	7,5	5	875	1 054	855
Z-507142.AR	799	**850**	1 120	320	85	7,5	5	930	1 114	910
Z-507143.AR	938	**900**	1 180	340	90	7,5	5	980	1 174	960
Z-507144.AR	1 120	**950**	1 250	360	92	7,5	5	1 035	1 246	1 015
Z-507145.AR	1 330	**1 000**	1 320	380	96	9,5	6	1 090	1 316	1 070
Z-507146.AR	1 630	**1 060**	1 400	412	102	9,5	6	1 155	1 394	1 135

[1] Tolerance to E11.

[2] Shaft tolerances, see table.

Shaft tolerances

Nominal dimension of shaft d_a in mm					
over	120	300	600	760	960
incl.	300	600	760	960	1 135
Deviations in µm					
upper	0	0	0	0	0
lower	−50	−70	−100	−125	−150



Mounting dimensions				Basic load ratings		Fatigue limit load	Limiting speed
d_a [2]	D_a	r_a	r_{a1}	dyn. C_a	stat. C_{0a}	C_{ua}	n_G
	max.	max.	max.	kN	kN	kN	min^{-1}
260	274	2	1	880	3 350	275	1 000
280	294	2	1	950	3 750	300	950
300	314	2	1	980	4 000	305	900
300	314	2	1	980	4 000	305	900
325	341	2,5	1,5	1 290	5 200	355	850
345	361	2,5	1,5	1 320	5 400	410	800
365	381	2,5	1,5	1 370	5 700	430	750
475	498	4	2,5	2 160	9 500	670	560
495	518	4	2,5	2 240	10 200	700	560
495	518	4	2,5	2 240	10 200	700	560
515	539	4	2,5	2 600	11 800	810	530
515	539	4	2,5	2 600	11 800	810	530
535	559	4	2,5	2 650	12 000	830	530
567	592	4	2,5	3 000	13 700	920	480
567	592	4	2,5	3 000	13 700	920	480
600	625	4	2,5	3 350	15 300	1 010	450
640	668	4	2,5	3 650	17 000	1 120	430
675	706	6,5	4	4 250	20 000	1 300	400
720	752	5	3	4 550	21 600	1 380	380
805	840	5	3	5 300	26 000	1 610	340
855	891	6	4	5 850	29 000	1 770	340
910	948	6	4	6 100	31 500	1 830	280
960	999	6	4	6 950	35 500	2 060	280
1 015	1 056	6	4	8 000	41 500	2 360	260
1 070	1 113	8	5	9 000	46 500	2 600	260
1 135	1 185	8	5	9 300	49 000	2 700	240

FAG

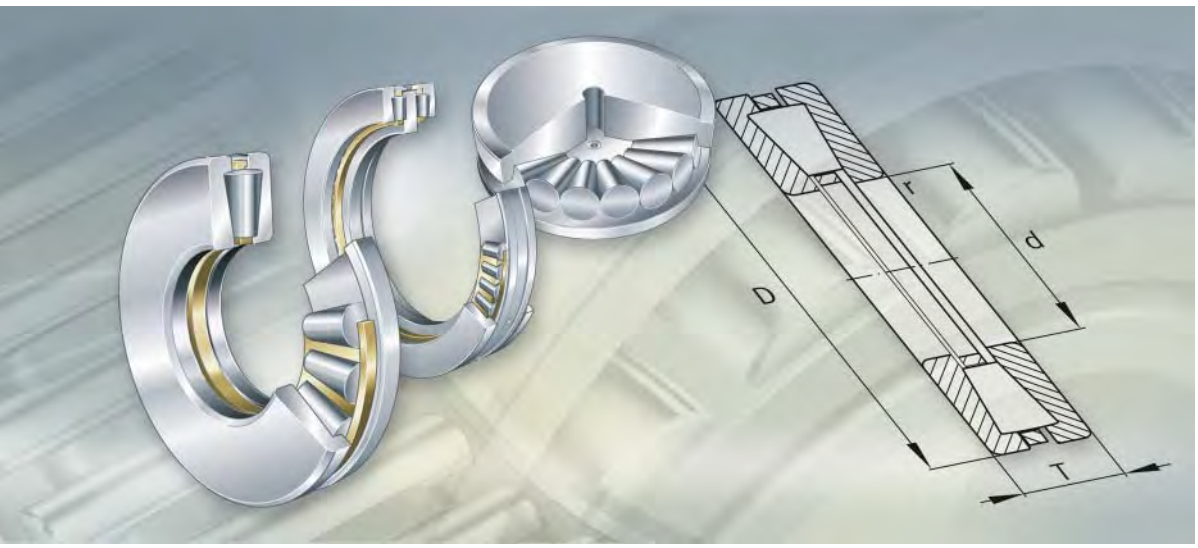

Axial tapered roller bearings

Single direction
Double direction
For screw-down mechanisms

Single direction axial tapered roller bearings

Single direction axial tapered roller bearings **796**

Single direction axial tapered roller bearings with two tapered raceways can support very high axial forces in one direction. The bearings are separable. As a result, the rings can be mounted separately.
The inch size main dimensions and the designations Z-5..TA1 or F-8..TA1 of these special bearings are not standardised.
A typical application for these axial tapered roller bearings is in flush heads for drilling rigs.

Double direction axial tapered roller bearings **804**

Double direction axial tapered roller bearings can support very high axial forces in both directions.
In these ready-to-fit bearings, the axial internal clearance is set by the ring between the housing locating washers.
The bearings are used, for example, in blooming stands and section rolling stands.
The metric main dimensions and designations Z-5..TA2 of these special bearings are not standardised.

Axial tapered roller bearings for screw-down mechanisms **812**

Axial tapered roller bearings for screw-down mechanisms in rolling stands can support extremely high axial forces in one direction. The separable bearings are mounted between the upper chock and the screw-down mechanism. Due to their low friction, these bearings reduce the screw-down forces.
Axial tapered roller bearings for screw-down mechanisms have non-standardised dimensions and designations Z-5..TA1 or F-8..TA1. The bearings are available in various designs.

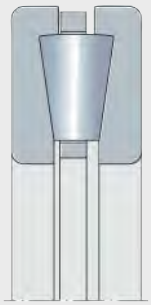



0001543F

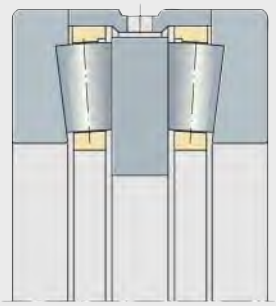

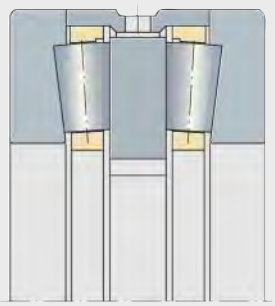

00015440

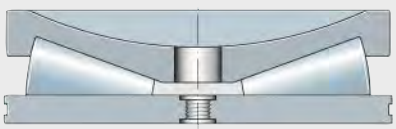

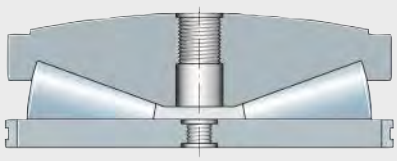

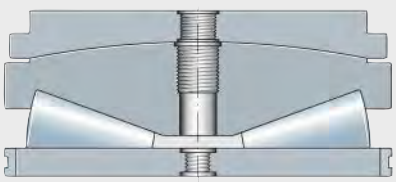

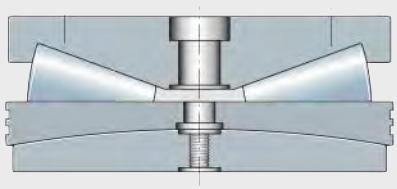

00015441

FAG

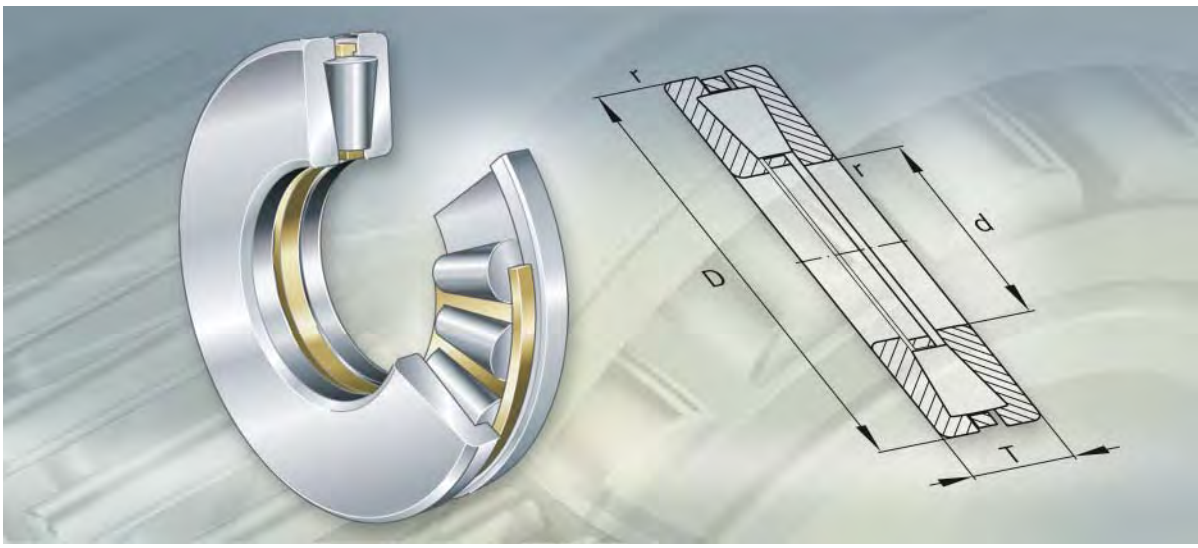

Single direction axial tapered roller bearings

Single direction axial tapered roller bearings

		Page
Product overview	Single direction axial tapered roller bearings	798
Features	Axial load capacity	799
	Sealing	799
	Lubrication	799
	Operating temperature	799
	Cage	799
Design and safety guidelines	Equivalent dynamic bearing load	800
	Equivalent static bearing load	800
	Minimum axial load	800
Accuracy		801
Dimension tables	Axial tapered roller bearings, single direction	802



Single direction

Z-5..TA1-01, F-8..TA1-01

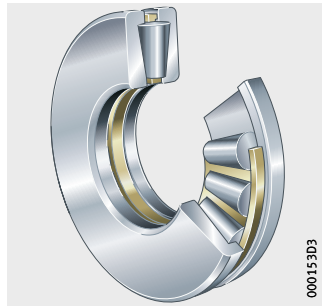

Single direction axial tapered roller bearings



Features

Single direction axial tapered roller bearings comprise a shaft locating washer and a housing locating washer, into which tapered raceways are machined, and a cage with tapered rollers.
Due to the large number of tapered rollers, the bearings have high rigidity.
Single direction axial tapered roller bearings are separable.
The bearing washers and the cage with the roller set can be mounted separately.

Single direction axial tapered roller bearings have non-standardised dimensions and designations Z-5..TA1 or F-8..TA1.

Axial load capacity

In their main application in flush heads for drilling rigs, the bearings can support very high axial forces (the weight of the rotating drill string) in one direction. The axial counterstay function is performed by a radial tapered roller bearing. As a result, the shaft locating washer cannot lift off if shocks occur in an upward direction.

Sealing

Single direction axial tapered roller bearings are not sealed.

Lubrication

Due to the vertical arrangement of the shaft, the single direction axial tapered roller bearings are lubricated with oil.

Operating temperature

Single direction axial tapered roller bearings can be used at operating temperatures from –30 °C to +150 °C.

Cage

Single direction axial tapered roller bearings have a solid brass cage.

Single direction axial tapered roller bearings

Design and safety guidelines

Equivalent dynamic bearing load

Single direction axial tapered roller bearings can support axial forces only.

For bearings under dynamic loading, the following applies:

$$P = F_a$$

P kN
Equivalent dynamic bearing load
F_a kN
Axial dynamic bearing load.

Equivalent static bearing load

Single direction axial tapered roller bearings can support axial forces only.

For bearings under static loading, the following applies:

$$P_0 = F_{0a}$$

P_0 kN
Equivalent static bearing load
F_{0a} kN
Axial static bearing load.

Minimum axial load

At higher speeds, detrimental sliding movements can occur between the rolling elements and the raceways due to centrifugal forces and gyroscopic moments. In order to avoid this, the bearings must be subjected to a minimum load $F_{a\ min}$. This can be achieved by means of preloading, for example using springs.

We can provide the minimum load factor A by agreement.
For n_{max}, the maximum operating speed must be used.

$$F_{a\ min} = A \cdot \left(\frac{n_{max}}{1000} \right)^2$$

$F_{a\ min}$ kN
Minimum axial load
A –
Minimum load factor A, values available by agreement
n_{max} min^{-1}
Maximum operating speed.

Accuracy

Normal tolerances for single direction axial tapered roller bearings, see tables.

Tolerances for shaft locating washer

Bore d mm		Bore deviation Δ_{dmp} µm	
over	incl.		
76,2	304,8	+25	0
304,8	609,6	+51	0
609,6	914,4	+76	0
914,4	1219,2	+102	0



Tolerances for housing locating washer

Outside diameter D mm		Outside diameter deviation Δ_{Dmp} µm	
over	incl.		
152,4	304,8	+25	0
304,8	609,6	+51	0
609,6	914,4	+76	0
914,4	1219,2	+102	0

Tolerances for nominal bearing height

Bore d mm		Deviation of nominal bearing height Δ_{Ts} µm	
over	incl.		
76,2	304,8	+381	–381
304,8	609,6	+381	–381
609,6	914,4	+381	–381
914,4	1219,2	+381	–381

Axial tapered roller bearings

Single direction

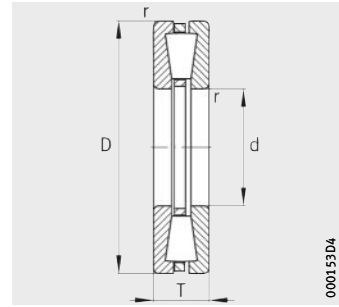

Dimension table · Dimensions in mm

Designation	Mass	Dimensions				Basic load ratings		Fatigue limit load
	m	d	D	T	r	dyn. C_a	stat. C_{0a}	C_{ua}
	≈kg				min.	kN	kN	kN
Z-535741.01.TA1	42,4	**174,626**	358,775	82,55	6,4	2 120	9 100	740
Z-547667.TA1	47,3	**177,8**	368,3	82,55	8	2 200	9 100	740
Z-549585.TA1	85,9	**177,8**	431,8	101,6	3,3	3 450	15 100	1 170
Z-547712.TA1	36,8	**190**	355,6	74,219	6,4	1 910	8 100	670
Z-514560.TA1	64,6	**203,2**	419,1	92,075	9,7	2 800	12 300	970
Z-547713.TA1	91,5	**203,2**	419,1	120,65	9,7	2 800	12 300	970
Z-547380.TA1	62	**228,6**	431,8	88,773	9,7	2 700	11 900	930
Z-512133.01.TA1	103	**228,6**	482,6	104,775	11,2	3 700	16 500	1 240
Z-546631.TA1	102	**234,95**	482,6	104,775	11,2	3 700	16 500	1 240
Z-513052.01.TA1	162	**234,95**	546,1	127	16	4 900	23 000	1 660
Z-537504.TA1	127	**241,3**	495,3	127	8	3 650	16 000	1 210
Z-547591.TA1	145	**254**	539,75	117,475	11,2	4 500	19 700	1 440
Z-539210.TA1	165	**273,05**	552,45	133,35	8	4 400	19 600	1 430
Z-539209.TA1	265	**273,05**	577,85	177,8	10	4 950	19 800	1 420
Z-539211.TA1	226	**273,05**	603,25	146,05	8	5 400	25 000	1 780
Z-546633.TA1	216	**279,4**	603,25	136,525	11,2	6 000	26 500	1 860
Z-547931.TA1	321	**292,1**	660,4	165,1	12,7	7 500	32 000	2 190
Z-549175.TA1	144	**368,3**	603,25	120,65	9,7	4 150	17 600	–
Z-549176.TA1	261	**406,4**	711,2	146,05	9,7	6 700	30 000	2 010
Z-533633.01.TA1	525	**406,4**	838,2	177,8	12,7	10 000	50 000	–
Z-521644.TA1	788	**508**	990,6	196,85	12,7	13 300	72 000	4 400
F-807320.TA1	630	**1 240**	1 540	140	9,7	11 000	77 000	4 150



FAG

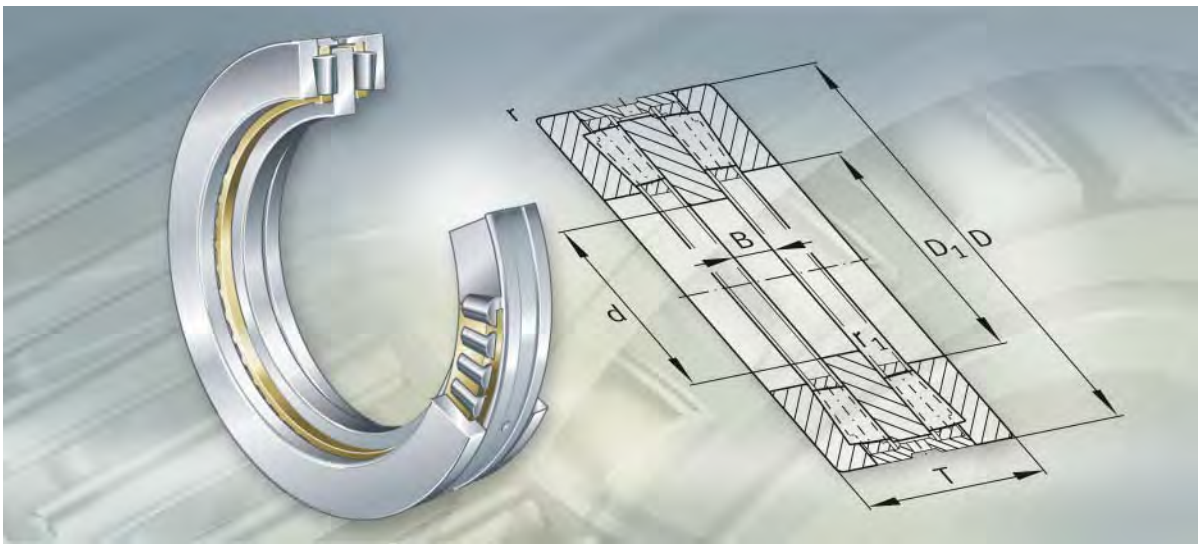

Double direction
axial tapered roller bearings

Double direction axial tapered roller bearings

		Page
Product overview	Double direction axial tapered roller bearings	806
Features	Axial load capacity	807
	Operating temperature	807
	Cage	807
Design and safety guidelines	Equivalent dynamic bearing load	808
	Equivalent static bearing load	808
	Minimum axial load	808
	Design of bearing arrangements	808
Accuracy		809
Dimension tables	Axial tapered roller bearings, double direction, with intermediate ring	810



Double direction axial tapered roller bearings

Double direction

Z-5..TA2

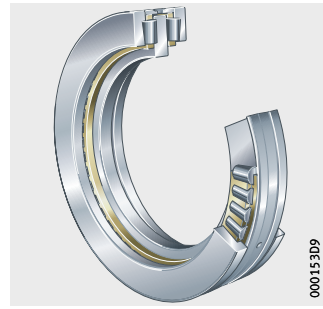

Double direction axial tapered roller bearings



Features

Double direction axial tapered roller bearings have a flat shaft locating washer and two housing locating washers.
Tapered raceways are machined into the housing locating washers.
A spacer ring between the housing locating washers guides the two cages with tapered rollers and sets the axial internal clearance. Due to the large number of tapered rollers, the bearings have high rigidity.

Double direction axial tapered roller bearings have non-standardised metric dimensions and designations Z-5..TA2.
The bearings are separable.
The bearing washers and the cages with rollers can be mounted separately.

Bearings of Design 2 have, in contrast to those of Design 1, a retaining slot in the shaft locating washer, see section Design of bearing arrangements, page 808.

Axial load capacity

Double direction axial tapered roller bearings can support very high axial forces in both directions at moderate speeds.

The bearings are mounted in preference in blooming stands and section rolling stands, in which multi-row cylindrical roller bearings are used as radial bearings.

Operating temperature

The double direction axial tapered roller bearings can be used at operating temperatures from –30 °C to +150 °C.

Cage

The solid brass cages are guided by the spacer ring which is arranged between the two housing locating washers.

Double direction axial tapered roller bearings

Design and safety guidelines

Equivalent dynamic bearing load

Double direction axial tapered roller bearings can support axial forces only.

For bearings under dynamic loading, the following applies:

$$P = F_a$$

P kN
Equivalent dynamic bearing load
F_a kN
Axial dynamic bearing load.

Equivalent static bearing load

Double direction axial tapered roller bearings can support axial forces only.

For bearings under static loading, the following applies:

$$P_0 = F_{0a}$$

P_0 kN
Equivalent static bearing load
F_{0a} kN
Axial static bearing load.

Minimum axial load

The spacer ring between the housing locating washers is matched such that slight preload is present once the cover screws on the chock have been tightened.

Design of bearing arrangements

Shaft and housing tolerances

The double direction axial tapered roller bearings are generally mounted loose on the journal and also located loose in the chocks.

Bearings of Design 2 have a retaining slot in the shaft locating washer. Feather keys, for example, are then used to ensure that this washer also rotates reliably.

If the bearings are located on a sleeve for easier mounting, the shaft locating washer should have a slight interference fit.

Mounting dimensions

The dimension tables give the maximum value of the radii r_a and r_{a1} and the diameters of the abutment shoulders d_a.

Accuracy

The diameter tolerances correspond to tolerance class PN to DIN 620-3. Please contact us for information on the section height tolerances.

Tolerances for shaft locating washer

Bore d mm		Bore deviation Δ_{dmp} µm	
over	incl.		
180	250	0	−30
250	315	0	−35
315	400	0	−40
400	500	0	−45
500	630	0	−50
630	800	0	−75
800	1000	0	−100



Tolerances for housing locating washer

Outside diameter D mm		Outside diameter deviation Δ_{Dmp} µm	
over	incl.		
180	250	0	−30
250	315	0	−35
315	400	0	−40
400	500	0	−45
500	630	0	−50
630	800	0	−75
800	1000	0	−100

Axial tapered roller bearings

Double direction
With intermediate ring

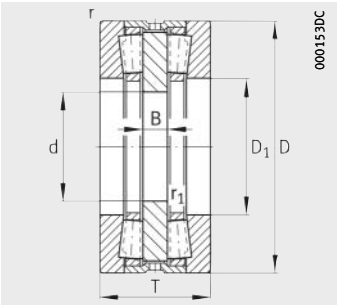

Design 1

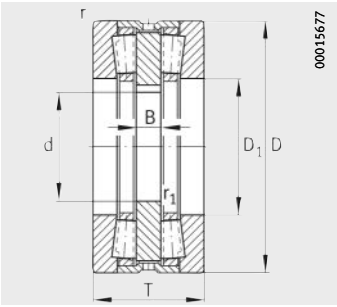

Design 2
With retaining slot
in the shaft locating washer

Dimension table · Dimensions in mm

Designation	Design	Mass	Dimensions						
		m	d	D	T	D_1	B	r	r_1
		≈kg						min.	min.
Z-529086.TA2	1	20,5	**240**	320	96	256	22	2	0,6
Z-545678.TA2	1	44	**240**	380	105	275	27	2	2
Z-532584.TA2	1	140	**240**	470	180	290	45	6	3
Z-547482.TA2	1	26	**250**	360	96	285	24	2,1	1,1
Z-522010.TA2	2	41	**250**	380	100	275	22	2	1,1
Z-509352.TA2	1	26	**260**	360	92	285	20	2,1	1,1
Z-527907.TA2	2	110	**270**	450	180	316	44	6	3
Z-524740.TA2	1	45	**300**	420	100	330	23	1,1	1,1
Z-544025.TA2	1	192	**305**	530	200	345	56	5	1,5
Z-528562.TA2	1	41,8	**320**	440	108	355	26	3	1,5
Z-509654.TA2	1	74,5	**320**	470	130	350	30	3	1,1
Z-540295.TA2	1	157	**320**	500	218	350	60	5	2
Z-522837.TA2	1	324	**320**	600	240	380	50	4	2
Z-530739.TA2	2	73	**350**	490	130	390	30	3	1,1
Z-579703.TA2	1	81	**350**	490	145	390	45	3	1,5
Z-522008.TA2	1	106	**350**	540	135	400	30	3	1
Z-573320.TA2	1	104	**360**	530	145	410	45	4	2
Z-524194.TA2	1	175	**360**	560	200	396	48	5	2
Z-513828.TA2	1	90	**380**	530	130	410	30	5	3
Z-513125.TA2	1	102	**380**	560	130	430	32	2,5	1,5
Z-548285.TA2	1	110	**380**	560	138	430	40	2,5	1,5
Z-567356.TA2	1	129	**380**	560	145	430	47	2,5	1,5
Z-545936.TA2	2	275	**380**	650	215	450	65	6	3
Z-540162.TA2	1	235	**400**	650	200	450	50	5	2
Z-524134.TA2	1	108	**410**	560	160	440	40	5	2
Z-509392.TA2	1	185	**420**	620	170	470	35	3	1,5
Z-545991.TA2	1	202	**420**	620	185	470	50	3	1
Z-579704.TA2	1	217	**420**	620	200	470	65	3	3
Z-534038.TA2	2	170	**440**	645	167	500	50	5	2
Z-513401.TA2	2	150	**450**	645	155	500	38	5	3
Z-509391.TA2	2	283	**470**	720	200	535	50	3	2
Z-549701.TA2	1	296	**470**	720	210	535	60	3	2
Z-547584.TA2	2	280	**480**	710	218	575	57	5	3
Z-511746.TA2	2	235	**530**	710	218	575	57	5	2
Z-515196.TA2	2	296	**550**	760	230	610	50	5	2
Z-521823.TA2	2	395	**670**	900	230	725	50	5	2

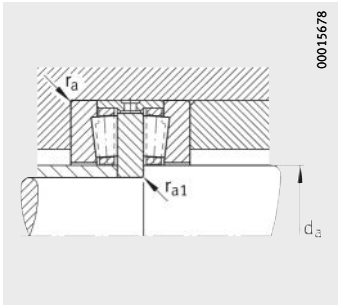

Mounting dimensions

Mounting dimensions			Basic load ratings		Fatigue limit load
d_a	r_a	r_{a1}	dyn. C_a	stat. C_{0a}	C_{ua}
max.	max.	max.	kN	kN	kN
249	2	0,6	640	2 750	217
267	2	2	1 000	5 300	435
278	5	2,5	2 550	12 100	910
274	2	1	710	3 250	255
267	2	1	1 000	5 300	435
274	2	1	710	3 250	255
302	5	2,5	2 100	8 900	650
322	1	1	890	4 550	350
–	4	1,5	3 000	14 700	1 080
345	2,5	1,5	1 020	5 200	390
335	2,5	1	1 400	6 900	510
–	4	2	2 400	10 100	730
360	3	2	4 000	18 300	1 280
375	2,5	1	1 370	7 100	510
375	2,5	1,5	1 370	7 100	510
385	2,5	1	1 860	10 800	790
398	3	2	1 570	8 300	590
383	4	2	3 050	13 800	970
398	4	2,5	1 540	8 000	580
411	2,5	1,5	1 860	11 100	800
411	2,5	1,5	1 860	11 100	800
411	2,5	1,5	1 860	11 100	800
430	5	2,5	3 850	20 000	1 390
–	4	2	3 850	20 000	1 390
426	4	2	1 840	9 400	650
450	2,5	1,5	2 350	12 500	870
450	2,5	1	2 350	12 500	870
450	2,5	2,5	2 350	12 500	870
480	4	2	2 300	13 100	900
480	4	2,5	2 300	13 100	900
517	2,5	2	3 500	19 900	1 330
517	2,5	2	3 500	19 900	1 330
555	4	2,5	2 800	14 800	960
555	4	2	2 800	14 800	960
581	4	2	3 350	17 300	1 100
700	4	2	4 000	22 400	1 380

FAG

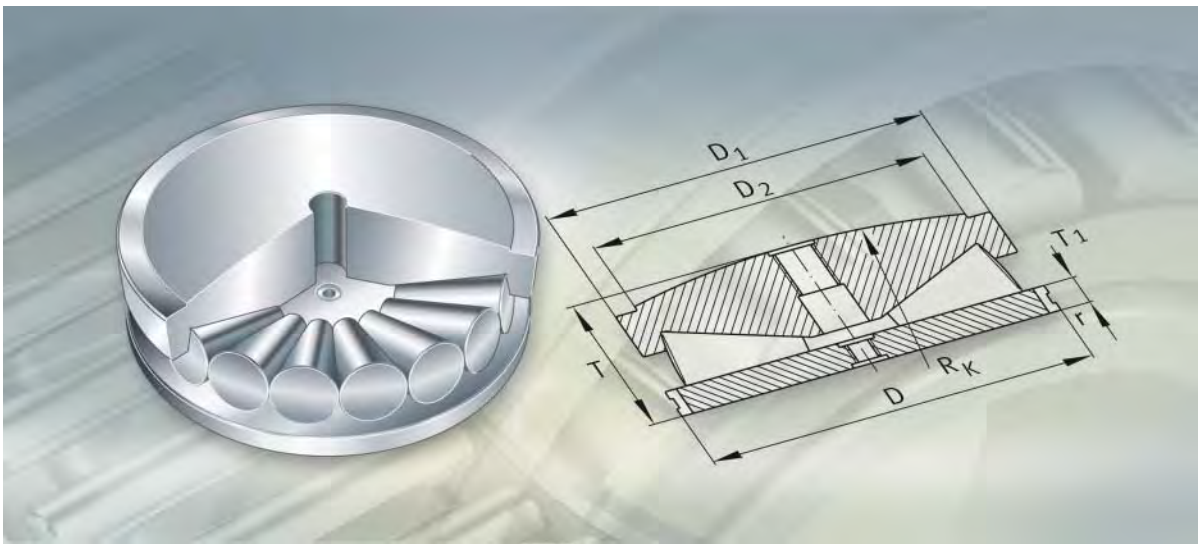

Axial tapered roller bearings for screw-down mechanisms

Axial tapered roller bearings for screw-down mechanisms

		Page
Product overview	Axial tapered roller bearings for screw-down mechanisms	814
Features	Axial load capacity	815
	Compensation of angular misalignments	815
	Operating temperature	816
Design and safety guidelines	Equivalent static bearing load	817
	Requisite static load safety factor	817
Accuracy		817
Dimension tables	Axial tapered roller bearings for screw-down mechanisms	818



Axial tapered roller bearings for screw-down mechanisms

Single direction

Z-5..TA1-02, F-8..TA1-02

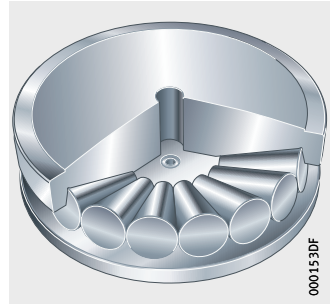

Axial tapered roller bearings for screw-down mechanisms

Features

These single direction axial tapered roller bearings are special bearings for screw-down mechanisms on rolling stands. The tapered rollers are guided by the rib of the shaft locating washer and run on a plain washer arranged below this. Due to their low friction, these bearings reduce the screw-down forces of the mechanisms. Axial tapered roller bearings have non-standardised metric or inch size main dimensions and designations Z-5..TA1 or F-8..TA1. The bearings are separable. The bearing washers and rollers can be mounted separately.



Axial load capacity

In order that the bearings have an extremely high axial load carrying capacity in one direction, they are generally of a full complement design. Some bearing sizes are also available with a cage.

Compensation of angular misalignments

Axial tapered roller bearings for screw-down mechanisms are designed such that they can support the adjustment movements of chocks. The various bearing designs are matched to the specific application. Some bearings have a concave or convex shaft locating washer, *Figure 1*. The adjustment movement can also be facilitated by concave or convex thrust washers, *Figure 2*, page 816.

Design 1

- The bearings have a shaft locating washer with a concave upper surface, *Figure 1* ①.
  The screw-down mechanism is of a spherical design.

Design 2

- In these bearings, the shaft locating washer has a convex upper surface, *Figure 1* ②.
  The screw-down mechanism is of a concave design.

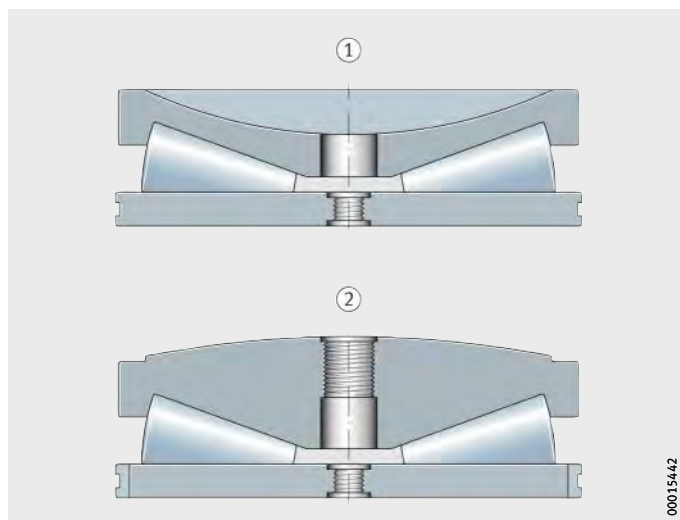

① Design 1
② Design 2

Figure 1
Axial tapered roller bearings for screw-down mechanisms

Axial tapered roller bearings for screw-down mechanisms

Design 3

- In these bearings, the adjustment movements are supported between a shaft locating washer with a convex upper surface and a concave thrust washer, *Figure 2* ①.

Design 4

- Bearings of this design support the adjustment movements between a plain washer with a concave lower surface and a convex thrust washer, *Figure 2* ②.

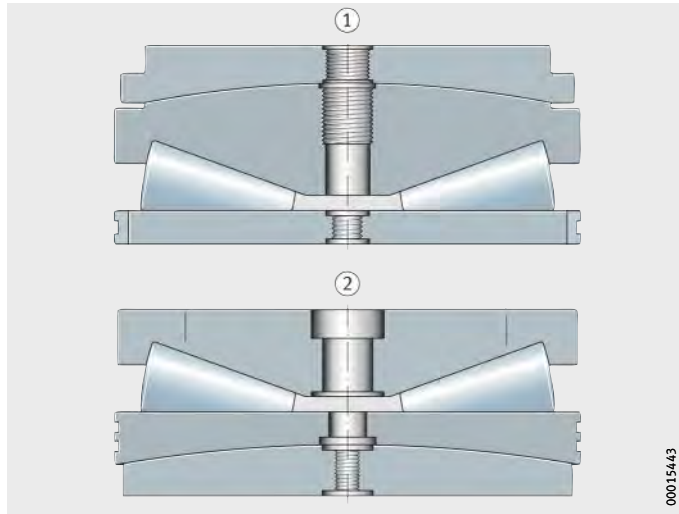

① Design 3
② Design 4

Figure 2
Axial tapered roller bearings for screw-down mechanisms (continued)

Operating temperature

Axial tapered roller bearings for screw-down mechanisms can be used at operating temperatures from –30 °C to +150 °C.

Design and safety guidelines

Equivalent static bearing load

Axial tapered roller bearings for screw-down mechanisms can only support static axial forces in one direction.

For bearings under static loading, the following applies:

$$P_0 = F_{0a}$$

P_0 kN
Equivalent static bearing load

F_{0a} kN
Axial static bearing load.



Requisite static load safety factor

The security against excessive plastic deformations at the contact points of the rolling elements is indicated by the static load safety factor S_0.

In the case of bearings for screw-down mechanisms, the aim should be to achieve a value of S_0 = 1,8 to 2.

$$S_0 = \frac{C_{0a}}{P_0}$$

S_0 –
Static load safety factor

C_{0a} kN
Basic static load rating, see dimension tables

P_0 kN
Equivalent static bearing load.

Accuracy

The dimensional and running tolerances of non-standardised axial tapered roller bearings are matched to the specific application and should be requested from Schaeffler Technologies.

Axial tapered roller bearings

For screw-down mechanisms

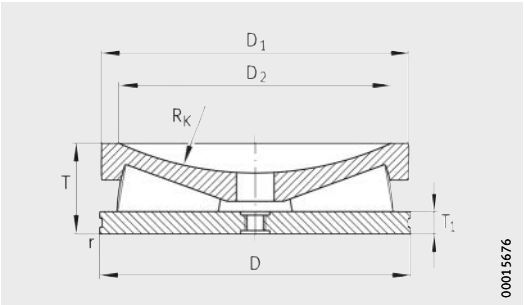

Design 1
Design 3, page 820
Design 4, page 821

Dimension table · Dimensions in mm

Designation	Design	Mass	Dimensions				
		m	D	D_1	D_2	D_3	D_4
		≈kg					
Z-525469.TA1	2	62	**320,68**	318,31	279,4	–	–
Z-567355.TA1	3[1)]	75	**320,68**	318,31	–	275	318,31
Z-534470.TA1	2	100	**377,825**	375,46	330,2	–	–
Z-573271.TA1	3[1)]	125	**377,825**	375,46	–	300	370
Z-542974.TA1	1	127	**409,575**	407,16	330,2	–	–
Z-533632.TA1	2	110	**409,58**	409,58	355,6	–	–
Z-524192.TA1	2[1)]	128	**409,58**	407,21	355,6	–	–
Z-580635.TA1	3	157	**409,58**	407,21	–	355	355
Z-565300.TA1	1	156	**438,15**	435,79	381	–	–
Z-517113.TA1	2[1)]	157	**438,15**	435,79	381	–	–
Z-548480.TA1	1	184	**457,2**	448,34	336,6	–	–
Z-528348.TA1	2	185	**482,6**	482,6	444,5	–	–
Z-580692.TA1	3	260	**482,6**	482,6	–	425	508
Z-517982.TA1	2	228	**495,3**	492,94	431,8	–	–
Z-522978.TA1	2	228	**495,3**	492,94	431,8	–	–
Z-573917.TA1	2	228	**495,3**	492,94	431,8	–	–
Z-525914.TA1	4	274	**495,3**	495,3	–	–	476
Z-536435.TA1	2	278	**514,35**	521,25	403,1	–	–
Z-517979.TA1	2[1)]	258	**523,875**	521,51	457,2	–	–
Z-527580.TA1	2	243	**523,875**	521,51	457,2	–	–
Z-531555.TA1	2[1)]	274	**533,4**	533,4	457,2	–	–
Z-548693.TA1	1	255	**533,4**	533,4	460,3	–	–
Z-512525.01.TA1	2[1)]	274	**533,4**	533,4	495	–	–
Z-547666.TA1	1	287	**533,4**	533,4	460	–	–
Z-566306.TA1	3[1)]	373	**533,4**	533,4	–	416	530
F-800901.TA1	3	352	**533,4**	533,4	–	410	500
Z-534972.TA1	2[1)]	292	**533,45**	533,4	495	–	–
Z-527805.TA1	1	260	**551,69**	539,75	406,4	–	–
Z-542654.TA1	1	318	**555**	555	414	–	–
Z-527795.TA1	1	274	**555,63**	553,26	482,6	–	–
Z-524340.TA1	2[1)]	318	**555,63**	553,26	482,5	–	–
Z-542752.TA1	2	340	**578,66**	578,66	495	–	–

1) Without retaining slot in the plain washer.

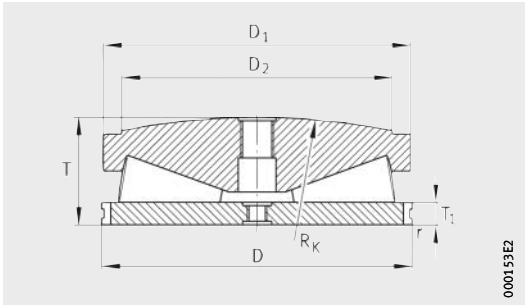

Design 2

					Basic load rating
T	T_1	T_2	R_K	r min.	stat. C_{0a} kN
110,97	22,23	–	762	1,6	12 500
135	22,23	6	762	1,6	12 800
129,01	25,4	–	914,4	1,6	17 500
164,01	25,4	10	914,4	1,6	17 000
139,7	28,575	–	508	–	20 700
122,2	–	–	508	–	20 700
140,77	28,58	–	1 016	6	20 700
188	28,58	–	1 016	2,3	20 400
149,23	50,4	–	1 270	3,2	24 100
150,673	31,75	–	1 016	3,2	23 600
161,925	31,075	–	508	3	26 500
145,54	38,1	–	1 905	1,6	27 000
205,54	38,1	44	1 905	1,6	27 000
170,61	34,93	–	1 066,8	3,2	31 000
170,61	34,93	–	1 066,8	3,2	31 000
170,61	34,93	–	1 066,8	3,2	31 000
210	100	–	885	–	30 500
189,1	34,92	–	635	–	36 500
175,768	34,925	–	1 270	3,2	36 000
175,768	34,925	–	1 610,7	3,2	36 500
177,8	31,75	–	1 981,2	3,2	36 500
177,8	31,75	–	1 270	3	36 500
177,8	31,75	–	1 981,2	1,6	39 500
190,5	50,8	–	–	–	36 500
237,8	31,75	8,8	1 981,2	3,2	39 500
245	31,75	45	1 981,2	3,2	39 500
190,5	31,75	–	1 219,2	3,2	36 500
158,75	25,4	–	635	3,2	36 000
190,5	50	–	1 270	–	39 000
165,1	38,1	–	635	3,2	38 000
190,86	38,1	–	1 270	3,2	38 000
187,81	38,1	–	1 981,2	–	43 500

Axial tapered roller bearings

For screw-down mechanisms

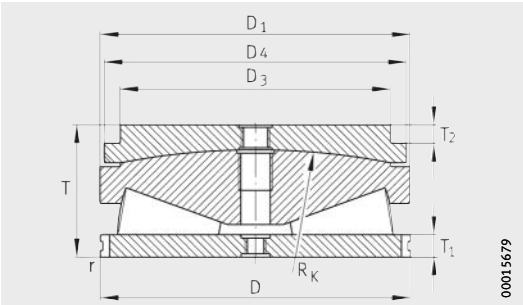

Design 3
Design 2, page 819

Dimension table (continued) · Dimensions in mm

Designation	Design	Mass	Dimensions				
		m	D	D_1	D_2	D_3	D_4
		≈kg					
Z-547440.TA1	2[1]	355	**581,02**	578,66	508	–	–
Z-531065.TA1	2[1]	355	**581,03**	578,66	508	–	–
Z-525652.TA1	4[2]	435	**581,03**	581,03	–	–	571,5
Z-525652.TA1-V	4	435	**581,03**	581,03	–	–	571,5
F-800903.TA1	3	450	**581,03**	578,66	–	500	570
Z-565906.TA1	3[1]	450	**581,03**	578,66	–	460	570
Z-526199.TA1	2	413	**609,6**	607,24	533,4	–	–
Z-533179.01.TA1	4	415	**609,6**	609,6	–	–	582,63
Z-563648.TA1	3	512	**609,6**	607,24	533,4	585	710
Z-526198.TA1	2[1]	419	**641,35**	638,99	558,8	–	–
Z-578367.01.TA1	3	565	**641,35**	638,99	–	560	635
Z-547969.TA1	4	700	**641,35**	655	–	–	634
F-801496.TA1	2	900	**768,35**	765,81	609,6	–	–
Z-527184.TA1	4[2]	1 100	**800**	800	–	–	740
Z-527184.TA1-V	4	1 100	**800**	800	–	–	740
Z-523387.TA1	4[2]	1 320	**850**	850	–	–	775
Z-544992.TA1	4[2]	1 650	**900**	900	–	–	830
Z-544992.TA1-V	4	1 650	**900**	900	–	–	830
Z-543242.TA1	3[2]	1 740	**920**	920	–	768	915
Z-543242.TA1-V	3	1 670	**920**	920	–	768	915
Z-530866.TA1	4	2 100	**1 016**	1 016	–	–	–
Z-565979.TA1	4	2 490	**1 095**	1 100	–	–	1 050

1) Without retaining slot in the plain washer.

2) Axial tapered roller bearings for screw-down mechanisms with solid brass cage; all other bearings are of a full complement roller design.

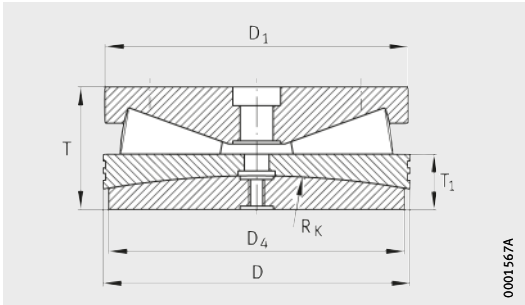

Design 4

					Basic load rating
T	T_1	T_2	R_K	r min.	stat. C_{0a} kN
196,65	38,1	–	1 308,1	3,2	43 500
193,78	38,1	–	1 422,4	3,2	42 500
240,77	108	–	1 270	–	31 500
240,77	108	–	1 270	–	43 500
243,78	38,1	39	1 422,4	3,2	43 500
243,78	38,1	5	1 422,4	3,2	43 500
204,01	38,1	–	1 524	3,2	49 000
249,96	108	–	1 270	–	49 000
254,01	38,1	40	1 524	3,2	48 000
212,67	38,1	–	1 524	3,2	49 000
260	38,1	45	1 524	3,2	54 000
282	136,3	–	1 270	–	42 500
295,275	70	–	1 524	3,2	68 000
320	175	–	1 500	–	53 000
320	175	–	1 500	–	64 000
360	195	–	1 500	–	60 000
390	130	–	1 500	–	79 000
390	130	–	1 500	–	93 000
370	70	20	2 300	7,5	65 500
370	70	20	2 300	7,5	80 000
412,75	111,15	–	1 900	–	83 000
380	175	–	3 000	–	131 000

FAG

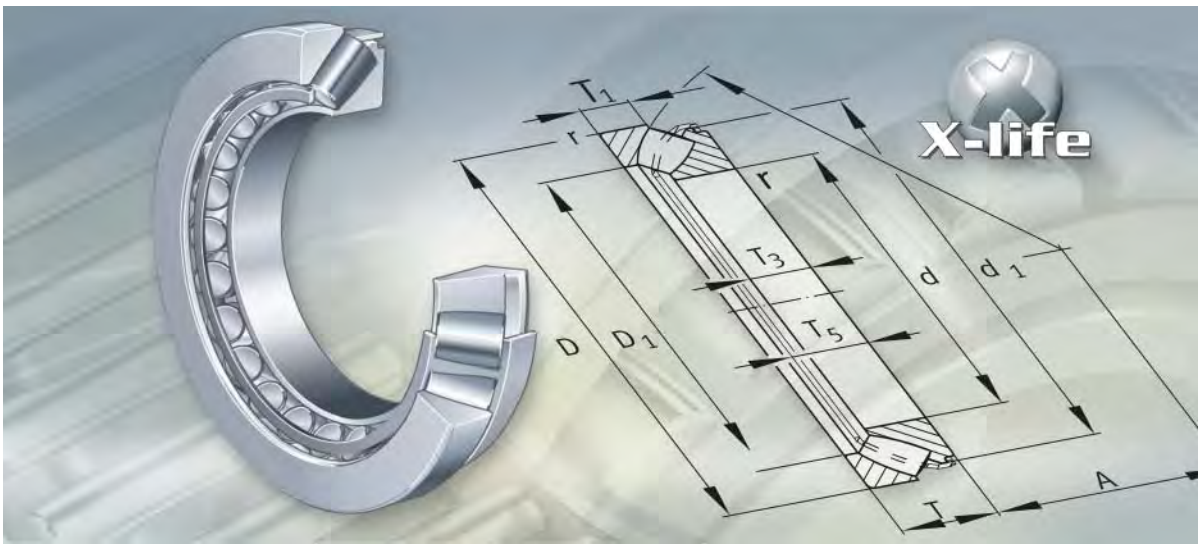

Axial spherical roller bearings

Axial spherical roller bearings

		Page
Product overview	Axial spherical roller bearings	824
Features	X-life	825
	Axial and radial load capacity	825
	Compensation of angular misalignments	825
	Sealing	826
	Lubrication	826
	Operating temperature	826
	Cages	826
	Suffixes	826
Design and safety guidelines	Equivalent dynamic bearing load	827
	Equivalent static bearing load	827
	Static load safety factor	827
	Minimum axial load	828
	Speeds	828
	Design of bearing arrangements	829
Accuracy		829
Dimension tables	Axial spherical roller bearings	830



Increased capacity design

With sheet metal cage

293..-E1, 294..-E1

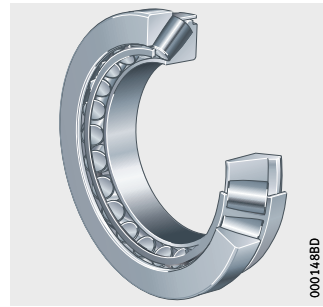

293..-E, 294..-E

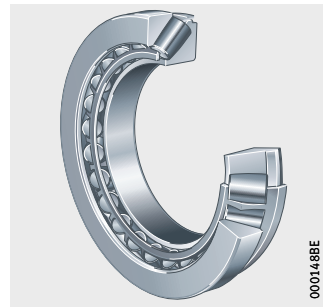

With solid cage

292..-E, 293..-E, 294..-E

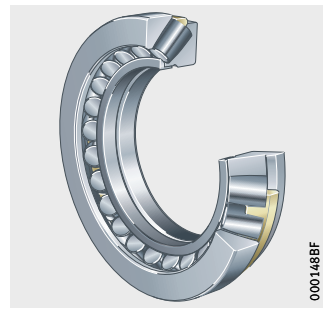

Axial spherical roller bearings

Features

Axial spherical roller bearings are single row, self-aligning roller bearings. They comprise solid shaft and housing locating washers and asymmetrical barrel rollers with cages.
The cage holds the roller and cage assembly and the shaft locating washer together. The bearings are separable.
As a result, the bearing components can be mounted separately.

X-life

Some axial spherical roller bearings of the series 293..-E1 and 294..-E1 are of X-life quality. These bearings are indicated in the dimension tables.

The bearings have an internal construction that gives increased basic load ratings as well as a precise contact geometry between the guidance rib and the end of the roller for improved kinematics. Friction and wear are reduced as a result of optimum lubricant film formation and a new cage design with improved guidance of the rollers and lubricant. Optimised osculation conditions give more uniform distribution of pressure between the rollers and raceways.

Due to the increased axial load carrying capacity and reduced bearing temperature, the rating life is significantly improved under the same operating conditions.



Axial and radial load capacity

Axial spherical roller bearings can support very high axial loads and allow relatively high speeds. Since the raceways are inclined relative to the bearing axis, the bearings can also support radial loads, see section Radial load, page 827.

Compensation of angular misalignments

Axial spherical roller bearings can be swivelled about their central position by a few degrees, see table.
As a result, they permit skewing between the housing and shaft locating washer and can thus compensate misalignments, shaft deflections and housing deformations.

The adjustment angles given in the table are permissible under the following conditions:

- P or $P_0 \leqq 0{,}05 \cdot C_{0a}$
- the angular deviation is constant (static angular misalignment)
- the rotating component is the shaft locating washer.

Permissible skewing

Series	Permissible skewing[1)]
292..-E(-E1)	1°
293..-E(-E1)	1,5°
294..-E(-E1)	2°

1) If the rotating component is the housing locating washer or the shaft locating washer undergoes tumbling motion, the angular adjustment facility is smaller.

Sealing

Axial spherical roller bearings are not sealed.

Lubrication

The bearings are not greased. They are generally lubricated using oil. In some cases, lubrication with greases containing EP additives is also possible. Adequate supply to the contact points between the rollers and guidance rib is best achieved if the bearings are completely filled with grease.

Operating temperature

Axial spherical roller bearings can be used at operating temperatures from –30 °C to +200 °C.

Cages

The standard cages for axial spherical roller bearings are shown in the table.

Bearings with the suffix MB have a solid brass cage that is guided on the shaft locating washer.

The other bearings have sheet steel cages and do not have a cage suffix.

Cage and bore code

Series	Sheet steel cage Bore code	Solid brass cage
292..-E(-E1)	–	All
293..-E1	All	–
294..-E1	All	–
293..-E	up to 64	from 68
294..-E	up to 68	from 72

Suffixes

Suffixes for available designs: see table.

Available designs

Suffix	Description	Design
E, E1	Increased capacity design	Standard
MB	Solid brass cage	

Design and safety guidelines

Equivalent dynamic bearing load

For bearings under dynamic loading, the following applies:

$$P = F_a + 1,2 \cdot F_r$$

P kN
Equivalent dynamic bearing load for combined load
F_a kN
Axial dynamic bearing load
F_r kN
Radial dynamic bearing load.

Radial load

The radial bearing load must not exceed 55% of the axial load: $F_r \leqq 0,55 \cdot F_a$.



Equivalent static bearing load

For bearings under static loading, the following applies:

$$P_0 = F_{0a} + 2,7 \cdot F_{0r}$$

P_0 kN
Equivalent static bearing load for combined load
F_{0a} kN
Axial static bearing load
F_{0r} kN
Radial static bearing load.

Radial load

The radial bearing load must not exceed 55% of the axial load: $F_{0r} \leqq 0,55 \cdot F_{0a}$.

Static load safety factor

For the static load safety factor S_0, the following values must be observed:

Static load safety factor

Static load safety factor S_0	Preconditions
$S_0 \geqq 8$	Axial support by the abutment shoulders in accordance with the bearing tables (d_a and D_a)
$S_0 \geqq 6$	Full axial support of the housing and shaft locating washers on the entire abutment surface, dimensions D_1 and d_1, see dimension table
$S_0 \geqq 4$	Full axial support, dimensions D_1 and d_1, see dimension table, together with good radial support of the housing locating washer (housing tolerance K7)

Minimum axial load

A minimum axial load $F_{a\ min}$ according to the equation must be applied:

$$F_{a\ min} = 0{,}0005 \cdot C_{0a} + k_a \left(\frac{C_{0a} \cdot n}{10^8} \right)^2$$

$F_{a\ min}$ N
Minimum axial load

C_{0a} N
Basic static load rating, see dimension table (observe dimension)

k_a –
Factor for determining the minimum load, see table

n min^{-1}
Maximum speed.

Factor k_a

Series	Factor k_a
292..-E(-E1)	0,6
293..-E(-E1)	0,9
294..-E(-E1)	0,7

Speeds

The limiting speeds n_G given in the dimension tables must not be exceeded. The values are for oil lubrication.

The reference speeds n_B were calculated in accordance with ISO 15 312.

Design of bearing arrangements

The tolerances for the shaft and locating bore must be selected in accordance with the table.

Shaft and housing tolerances

Adjacent part	Type of load	Operating conditions	Tolerance
Shaft	Combined load	Point load for shaft locating washer	j6
		Circumferential load for shaft locating washer, shaft diameter up to 200 mm	j6 (k6)
		Circumferential load for shaft locating washer, shaft diameter over 200 mm	k6 (m6)
Housing	Axial load	Normal loads	E8
		High loads	G7
	Combined load	Point load for housing locating washer	H7
		Circumferential load for housing locating washer	K7



Adjacent parts

The axial runout tolerances of the abutment shoulders should be to IT5 or better. The abutment shoulders should be rigid, flat and perpendicular to the axis of rotation.

Above the housing locating washer, a recess of diameter $D_{b\ min}$ must be provided in the housing bore, see dimension table. Otherwise, the rollers will foul the housing when the shaft swivels.

In the new internal construction of the E1 design, attention must be paid to the mounting dimensions. This also applies to the design of the spacer sleeve on the shaft locating washer (dimensions d_b, d_{b1}).

Accuracy

The main dimensions of the bearings conform to ISO 104 and DIN 728.

The dimensional and running tolerances correspond to tolerance class PN to DIN 620-3.

The section height tolerance for axial spherical roller bearings of the E1 design is restricted by up to 70% compared to the standard.

Axial spherical roller bearings

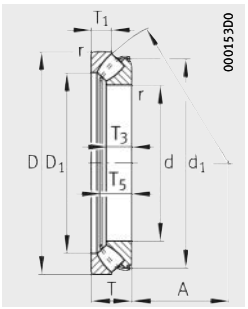

293..-E1, 294..-E1

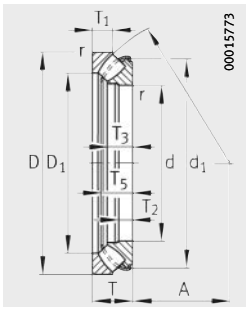

293..-E, 294..-E

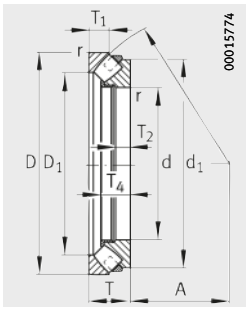

292..-E(E1)-MB,
293..-E-MB, 294..-E-MB

Dimension table · Dimensions in mm

Designation		Mass	Dimensions												
	X-life	m ≈kg	d	D	T	D_1	d_1	r min.	T_1	T_2	T_3	T_4	T_5	A
29432-E1	**XL**	32,1	**160**	320	95	223,5	283,5	5	45,5	–	60,5	–	84,3	99
29434-E1	**XL**	39,6	**170**	340	103	236	305	5	50	–	65,5	–	91,2	104
29436-E1	**XL**	47,6	**180**	360	109	250	315,5	5	53	–	69,5	–	96,4	110
29338-E1	**XL**	22,3	**190**	320	78	243,5	290,1	4	36	–	49	–	71,3	110
29438-E	–	54,9	**190**	380	115	268	340	5	55	41	73	–	94	117
29340-E1	**XL**	27,3	**200**	340	85	257	308,8	4	40	–	53,5	–	76,7	116
29440-E	–	64,7	**200**	400	122	282	360	5	59	44	77	–	99	122
29344-E	–	29,9	**220**	360	85	279	330	4	41	31	53	–	71	125
29444-E	–	67,4	**220**	420	122	303	375	6	58	44	76,5	–	99	132
29248-E1-MB	–	16,6	**240**	340	60	283	320	2,1	30	22	37	57	–	130
29348-E	–	32,5	**240**	380	85	299	350	4	41	31	53	–	71	135
29448-E	–	73,5	**240**	440	122	321	400	6	59	44	78	–	99	142
29252-E-MB	–	17	**260**	360	60	302	340	2,1	30	22	38	44	–	139
29352-E	–	45,2	**260**	420	95	327	385	5	45	34	61	–	79	148
29452-E	–	93,6	**260**	480	132	353	435	6	64	48	83	–	107	154
29256-E-MB	–	19,2	**280**	380	60	322	360	2,1	30	22	38	44	–	150
29356-E	–	48,8	**280**	440	95	346	405	5	46	34	61	–	79	158
29456-E	–	121	**280**	520	145	380	470	6	68	52	92	–	118	166
29260-E-MB	–	28,6	**300**	420	73	353	395	3	38	26	44	51	–	162
29360-E	–	66,4	**300**	480	109	378	440	5	50	39	69	–	90	168
29460-E	–	129	**300**	540	145	398	490	6	70	52	93	–	118	175
29264-E-MB	–	30,3	**320**	440	73	372	415	3	38	26	44,5	51	–	172
29364-E	–	71	**320**	500	109	396	465	5	53	39	68	–	90	180
29464-E	–	158	**320**	580	155	432	525	7,5	75	56	97	–	126	191
29268-E-MB	–	32	**340**	460	73	391	435	3	37	26	45	52	–	183
29368-E-MB	–	98,9	**340**	540	122	426	500	5	59	44	75	–	–	192
29468-E	–	200	**340**	620	170	458	560	7,5	82	61	106	–	138	201
29272-E-MB	–	46,5	**360**	500	85	423	475	4	44	31	51	59	–	194
29372-E-MB	–	103	**360**	560	122	446	520	5	59	44	75	86	–	202
29472-E-MB	–	219	**360**	640	170	475	580	7,5	82	61	108	121	–	210
29276-E-MB	–	48,4	**380**	520	85	440	490	4	42	31	53	81	–	202
29376-E-MB	–	132	**380**	600	132	474	555	6	63	48	83	94	–	216
29476-E-MB	–	248	**380**	670	175	500	610	7,5	85	63	111	124	–	230

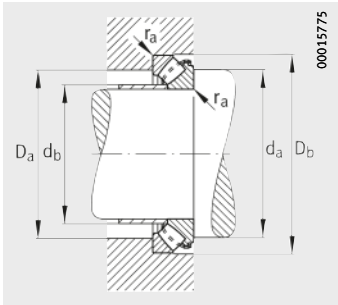

Mounting dimensions
293..-E, 294..-E,
293..-E1, 294..-E1

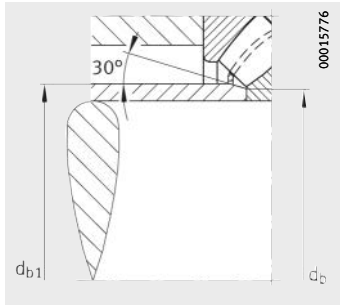

Mounting dimensions
293..-E1, 294..-E1

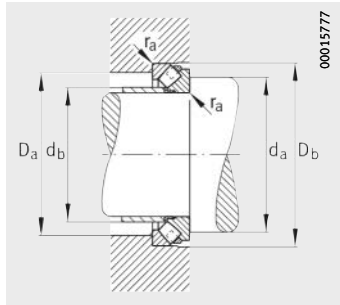

Mounting dimensions
292..-E(E1)-MB,
293..-E-MB, 294..-E-MB

Mounting dimensions						Basic load ratings		Fatigue limit load	Limiting speed	Reference speed
d_a	D_a	D_b	d_b	d_{b1}	r_a	dyn. C_a	stat. C_{0a}	C_{ua}	n_G	n_B
min.	max.	min.	max.	max.	max.	kN	kN	kN	min^{-1}	min^{-1}
235	271	326	176	189	4	2 240	6 000	630	2 200	1 090
250	288	346	186	199	4	2 550	6 900	700	2 000	1 030
265	305	366	197	210	4	2 850	7 700	770	1 800	940
250	281	325	201	211	3	1 680	4 850	580	2 200	1 090
275	322	386	214	–	4	2 320	7 500	470	1 200	970
265	298	348	213	224	3	1 900	5 600	640	2 000	1 030
290	338	406	225	–	4	2 550	8 500	510	1 100	920
285	316	368	235	–	3	1 560	5 600	335	1 400	980
310	360	428	243	–	5	2 600	8 500	520	1 100	860
290	311	344	250	–	2	1 010	4 150	465	1 800	1 070
300	337	390	256	–	3	1 630	6 100	355	1 400	890
330	381	448	265	–	5	2 700	9 500	570	1 100	790
305	331	365	272	–	2,1	1 060	4 750	260	1 700	960
330	372	430	277	–	4	2 040	7 650	445	1 200	810
360	419	488	291	–	5	3 100	11 000	650	1 000	730
325	351	385	291	–	2,1	1 120	5 100	270	1 500	890
350	394	450	298	–	4	2 120	8 300	470	1 200	750
390	446	530	310	–	5	3 650	12 900	750	900	670
355	386	426	317	–	2,5	1 430	6 550	345	1 400	830
380	429	490	320	–	4	2 550	9 650	540	1 100	700
410	471	550	326	–	5	3 900	14 000	810	900	620
375	406	450	336	–	2,5	1 500	6 950	360	1 300	770
400	449	510	340	–	4	2 650	10 600	580	1 100	660
435	507	590	354	–	6	4 300	15 600	890	800	590
395	427	470	353	–	2,5	1 560	7 350	385	1 300	730
430	484	550	364	–	4	3 250	12 900	700	950	600
465	541	630	373	–	6	5 200	19 000	1 070	750	530
420	461	510	380	–	3	1 900	8 800	455	1 200	700
450	504	572	384	–	4	3 350	13 400	720	900	570
485	560	650	391	–	6	5 400	20 400	1 130	750	495
440	480	530	395	–	3	2 080	9 650	495	1 100	650
480	538	612	404	–	5	3 900	16 000	860	850	530
510	587	682	415	–	6	5 850	22 400	1 220	700	465

Axial spherical roller bearings

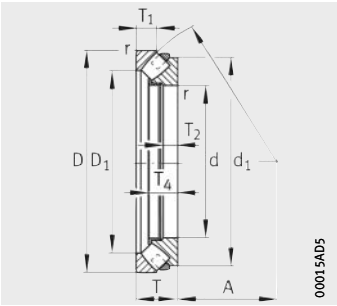

292..-E-MB,
293..-E-MB, 294..-E-MB

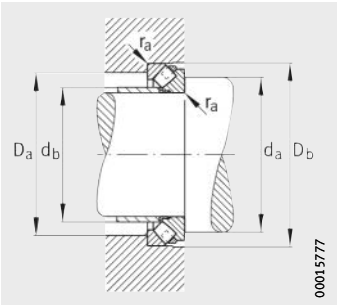

Mounting dimensions
292..-E-MB,
293..-E-MB, 294..-E-MB

Dimension table (continued) · Dimensions in mm

Designation	Mass	Dimensions										
	m	d	D	T	D_1	d_1	r	T_1	T_2	T_3	T_4	A
	≈kg						min.					
29280-E-MB	51,2	**400**	540	85	460	510	4	42	31	53,5	62	212
29380-E-MB	137	**400**	620	132	493	575	6	64	48	83	94	225
29480-E-MB	294	**400**	710	185	530	645	7,5	89	67	117	131	236
29284-E-MB	73,4	**420**	580	95	489	550	5	46	34	60,5	70	225
29384-E-MB	157	**420**	650	140	520	600	6	68	50	85	97	235
29484-E-MB	305	**420**	730	185	550	665	7,5	89	67	117	132	244
29288-E-MB	74	**440**	600	95	506	570	5	49	34	61	70	235
29388-E-MB	176	**440**	680	145	548	630	6	70	52	87	100	245
29488-E-MB	393	**440**	780	206	585	710	9,5	100	74	128	144	260
29292-E-MB	76,3	**460**	620	95	528	590	5	46	34	61	70	245
29392-E-MB	203	**460**	710	150	567	660	6	72	54	94,5	108	257
29492-E-MB	407	**460**	800	206	605	730	9,5	100	74	128	144	272
29296-E-MB	90,9	**480**	650	103	556	620	5	55	37	62	71	259
29396-E-MB	208	**480**	730	150	587	675	6	72	54	94	107	270
29496-E-MB	511	**480**	850	224	630	770	9,5	108	81	142	159	280
292/500-E-MB	93,5	**500**	670	103	574	640	5	55	37	63	72	268
293/500-E-MB	216	**500**	750	150	610	700	6	74	54	92	105	280
294/500-E-MB	525	**500**	870	224	654	790	9,5	107	81	142	160	290
292/530-E-MB	110	**530**	710	109	612	675	5	57	39	64	74	288
293/530-E-MB	266	**530**	800	160	646	745	7,5	76	58	101,5	116	295
294/530-E-MB	621	**530**	920	236	690	840	9,5	114	85	150,5	169	309
292/560-E-MB	131	**560**	750	115	642	715	5	60	41	71	111	302
293/560-E-MB	320	**560**	850	175	690	790	7,5	85	63	105,5	121	310
294/560-E-MB	733	**560**	980	250	729	890	12	120	90	163	182	328
292/600-E-MB	154	**600**	800	122	688	760	5	65	44	71,5	82	321
293/600-E-MB	373	**600**	900	180	727	840	7,5	87	65	113,5	129	335
294/600-E-MB	839	**600**	1 030	258	782	940	12	127	93	162	182	347
292/630-E-MB	195	**630**	850	132	724	805	6	67	48	82	94	338
293/630-E-MB	437	**630**	950	190	765	885	9,5	92	68	122	138	345
294/630-E-MB	1 030	**630**	1 090	280	820	995	12	136	101	176,5	198	365
292/670-E-MB	228	**670**	900	140	773	855	6	74	50	81	93	364
294/670-E-MB	1 080	**670**	1 150	290	869	1 050	15	138	104	186	208	387

Mounting dimensions					Basic load ratings		Fatigue limit load	Limiting speed	Reference speed
d_a	D_a	D_b	d_b	r_a	dyn. C_a	stat. C_{0a}	C_{ua}	n_G	n_B
min.	max.	min.	max.	max.	kN	kN	kN	min^{-1}	min^{-1}
460	500	550	415	3	2 120	10 200	510	1 100	610
500	557	634	424	5	4 000	16 600	880	850	510
540	622	722	441	6	6 400	25 000	1 330	670	440
490	534	590	437	4	2 650	12 500	620	1 000	580
525	585	664	447	5	4 300	18 000	940	800	475
560	643	742	455	6	6 700	26 000	1 390	630	420
510	554	610	458	4	2 650	13 400	660	1 000	550
548	614	695	470	5	4 550	19 000	990	750	460
595	684	794	486	8	7 650	30 000	1 570	600	395
530	575	632	477	4	2 700	13 400	660	950	530
575	638	726	487	5	5 000	21 200	1 120	700	440
615	704	815	502	8	7 800	31 000	1 620	600	380
555	603	662	508	4	2 800	14 600	700	900	510
593	660	746	507	5	5 200	22 400	1 160	700	410
645	744	865	521	8	9 300	36 500	1 920	530	350
575	622	682	527	4	2 900	15 300	740	900	490
615	683	768	532	5	5 100	22 800	1 160	700	400
670	765	886	542	8	9 300	37 500	1 930	530	340
611	661	722	560	4	3 100	16 300	770	850	465
650	724	818	561	6	6 000	26 500	1 350	630	375
700	810	937	573	8	10 200	41 500	2 160	500	320
645	697	762	586	4	3 650	19 300	910	800	435
691	770	868	595	6	6 700	29 000	1 460	600	355
750	860	997	606	10	11 800	49 000	2 480	480	290
690	744	814	633	4	3 800	20 400	960	750	410
735	815	920	633	6	7 350	33 500	1 660	560	325
800	900	1 055	653	10	12 200	52 000	2 600	450	275
730	789	864	657	5	4 800	25 500	1 180	670	375
839	856	970	665	8	8 300	38 000	1 830	530	305
840	960	1 115	681	10	14 000	58 500	2 850	430	260
775	836	915	710	5	4 900	26 000	1 190	630	365
880	1 015	1 175	729	12	15 000	64 000	3 150	400	245

Axial spherical roller bearings

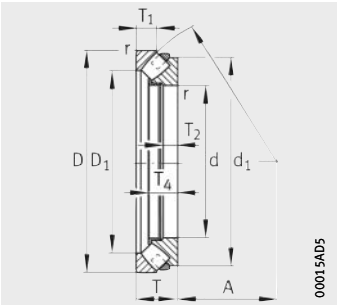

292..-E-MB,
293..-E-MB, 294..-E-MB

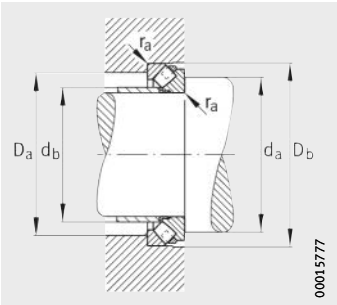

Mounting dimensions
292..-E-MB,
293..-E-MB, 294..-E-MB

Dimension table (continued) · Dimensions in mm

Designation	Mass	Dimensions										
	m	d	D	T	D_1	d_1	r	T_1	T_2	T_3	T_4	A
	≈kg						min.					
292/710-E-MB	261	**710**	950	145	815	905	6	75	52	88	101	380
293/710-E-MB	590	**710**	1 060	212	861	990	9,5	102	76	132,5	150	394
294/710-E-MB	1 420	**710**	1 220	308	916	1 115	15	150	111	198	221	415
292/750-E-MB	299	**750**	1 000	150	861	955	6	81	54	88	100	406
293/750-E-MB	716	**750**	1 120	224	909	1 045	9,5	108	81	140	159	415
294/750-E-MB	1 130	**750**	1 280	315	972	1 170	15	152	113	200	225	436
292/800-E-MB	341	**800**	1 060	155	915	1 010	7,5	81	56	96	110	426
293/800-E-MB	801	**800**	1 180	230	961	1 100	9,5	112	83	145,5	165	440
294/800-E-MB	1 900	**800**	1 360	335	1 030	1 245	15	163	121	214,5	241	462
292/850-E-MB	395	**850**	1 120	160	963	1 065	7,5	82	58	101,5	116	453
293/850-E-MB	933	**850**	1 250	243	1 021	1 165	12	118	87	152	173	468
294/850-E-MB	1 590	**850**	1 440	354	1 099	1 315	15	172	127	222	249	490
292/900-E-MB	444	**900**	1 180	170	1 023	1 125	7,5	84	61	105	121	477
293/900-E-MB	1 060	**900**	1 320	250	1 068	1 235	12	120	90	158	180	496
294/900-E-MB	2 610	**900**	1 520	372	1 149	1 395	15	180	134	241	266	518
292/950-E-MB	548	**950**	1 250	180	1 079	1 190	7,5	90	65	112	129	507
294/950-E-MB	3 070	**950**	1 600	390	1 211	1 470	15	188	140	256	290	546
292/1000-E-MB	640	**1 000**	1 320	190	1 139	1 260	9,5	98	68	117,5	134	540
294/1000-E-MB	3 400	**1 000**	1 670	402	1 268	1 530	15	194	145	264	299	581
292/1060-E-MB	789	**1 060**	1 400	206	1 208	1 335	9,5	108	74	124	142	566
294/1060-E-MB	4 040	**1 060**	1 770	426	1 347	1 625	15	205	153	279	317	608
292/1120-E-MB	832	**1 120**	1 460	206	1 270	1 395	9,5	108	74	125	146	593
294/1120-E-MB	4 630	**1 120**	1 860	444	1 419	1 710	15	214	160	290	329	642
292/1180-E-MB	867	**1 180**	1 520	206	1 330	1 455	9,5	108	74	125	146	625
294/1180-E-MB	5 280	**1 180**	1 950	462	1 490	1 795	19	224	166	303	344	673
292/1250-E-MB	1 020	**1 250**	1 610	216	1 411	1 540	9,5	113	78	131	154	650
293/1250-E-MB	2 570	**1 250**	1 800	330	1 465	1 685	15	160	119	208	236	690
294/1250-E-MB	5 980	**1 250**	2 050	480	1 573	1 885	19	233	173	314	357	711
292/1700-E-MB	2 230	**1 700**	2 160	280	1 900	2 070	12	145	101	170	200	892
292/1800-E-MB	2 530	**1 800**	2 280	290	2 012	2 185	15	150	104	175	207	945

Mounting dimensions					Basic load ratings		Fatigue limit load	Limiting speed	Reference speed
d_a	D_a	D_b	d_b	r_a	dyn. C_a	stat. C_{0a}	C_{ua}	n_G	n_B
min.	max.	min.	max.	max.	kN	kN	kN	min^{-1}	min^{-1}
820	882	966	743	5	5 600	30 500	1 390	600	335
869	962	1 082	752	8	9 800	46 500	2 200	480	265
925	1 073	1 250	768	12	17 300	75 000	3 600	400	224
863	930	1 017	798	5	5 600	32 000	1 410	600	325
915	1 015	1 142	795	8	10 800	51 000	2 420	450	255
1 000	1 130	1 310	812	12	18 300	80 000	3 800	360	213
918	987	1 078	837	6	6 550	37 500	1 640	530	295
970	1 070	1 202	842	8	11 800	57 000	2 700	450	232
1 050	1 200	1 390	862	12	20 800	91 500	4 250	340	196
973	1 043	1 138	881	6	7 350	42 500	1 860	500	270
1 028	1 137	1 273	896	10	12 900	64 000	2 900	430	215
1 119	1 229	1 470	875	12	22 800	100 000	4 700	300	184
1 025	1 101	1 198	933	6	8 000	44 000	1 930	480	260
1 090	1 203	1 343	947	10	14 300	71 000	3 250	400	206
1 170	1 345	1 555	974	12	25 000	114 000	5 300	300	172
1 147	1 089	1 268	983	6	9 000	51 000	2 190	450	244
1 372	1 241	1 635	1 022	12	27 500	129 000	5 800	280	158
1 216	1 151	1 340	1 045	8	9 800	57 000	2 450	430	232
1 435	1 298	1 705	1 074	12	29 000	137 000	6 200	280	151
1 290	1 220	1 422	1 111	8	10 800	64 000	2 700	400	218
1 521	1 377	1 815	1 138	12	32 500	153 000	6 800	260	141
1 350	1 280	1 482	1 196	8	11 200	68 000	2 800	400	203
1 604	1 449	1 905	1 211	12	35 500	170 000	7 400	260	132
1 340	1 415	1 542	1 227	8	11 200	69 500	2 850	360	195
1 683	1 520	2 007	1 267	15	39 000	190 000	8 100	240	122
1 425	1 500	1 632	1 298	8	12 900	80 000	3 150	360	179
1 520	1 640	1 830	1 315	12	24 000	127 000	5 400	280	142
1 771	1 603	2 107	1 338	15	41 500	204 000	8 700	220	116
1 915	2 010	2 187	1 757	10	21 200	140 000	5 300	260	127
2 025	2 120	2 313	1 864	12	22 800	150 000	5 700	260	120

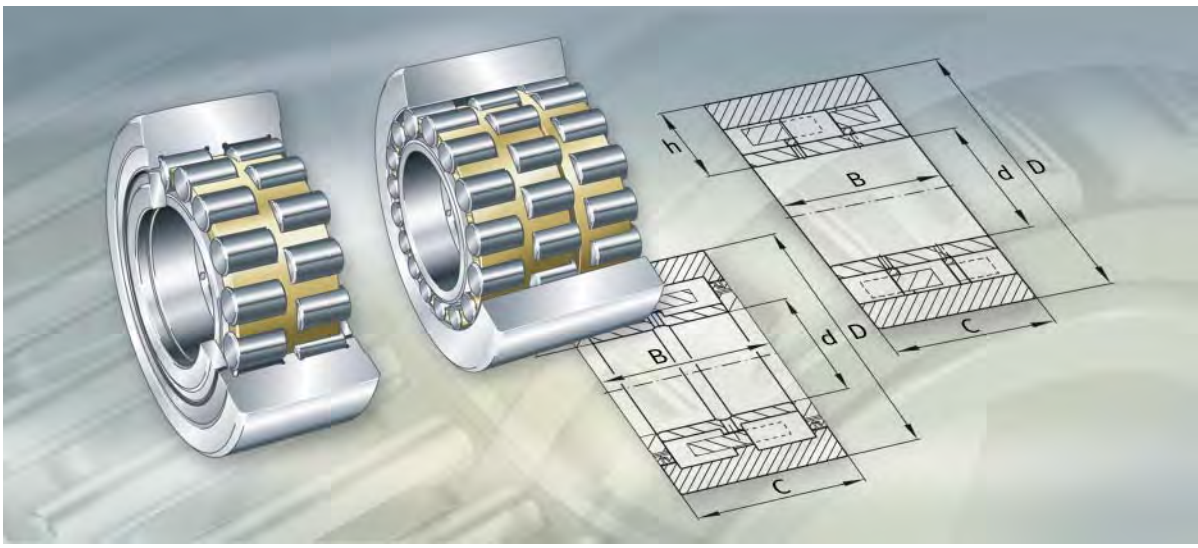

Back-up rollers
for multi-roll cold rolling mills

Back-up rollers for multi-roll cold rolling mills

		Page
Product overview	Back-up rollers for multi-roll cold rolling mills	838
Features	Non-locating bearings	839
	Locating bearings	840
	Materials	841
	Sealing	841
	Lubrication	841
	Cages	841
Design and safety guidelines	Application as back-up roller	842
	Application as bearing	842
	Equivalent dynamic bearing load	842
Accuracy		842
Dimension tables	Back-up rollers, double row or multi-row	844



Back-up rollers for multi-roll cold rolling mills

Non-locating bearings

Design 1

Z-5..WGTR3

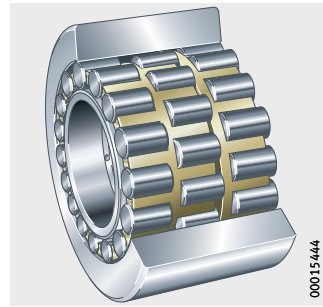

Locating bearings

Design 2

Z-5..WGTR2, F-8..WGTR2

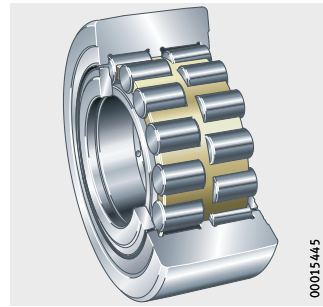

Back-up rollers
for multi-roll cold rolling mills

Features

These back-up rollers were developed for the particular operating conditions in multi-roll cold rolling mills.
A detailed description is given in TPI 129, Back-up Rollers for Multi-roll Cold Rolling Mills.

The rolling process requires bearings with high load carrying capacity and high accuracy. The bearings contain cylindrical rollers and have particularly thick-walled, rotating outer rings.
The inner rings are located on the stationary support shaft.

The back-up rollers are suitable for high radial forces or high radial forces and axial forces. The important factors for the quality of the rolled sheet metal are the section height tolerance, the running accuracy and the surface quality of the outer ring outside surface of the back-up rollers. They are separable and are therefore easier to mount and dismount.

Non-locating bearings Design 1

The raceways of these back-up rollers are completely cylindrical. The first and second rows of rollers are guided by a double comb cage, while the third row is guided by a single comb cage.
The rollers are guided axially by rib washers on the inner ring.

The simple geometrical form facilitates very high accuracy in production and in the rework of the rollers.

The outer ring must be laterally guided by plain washers in the support saddles. These plain bearings restrict the speed of the rollers and thus the rolling speed.
We supply back-up rollers of Design 1 without seals, *Figure 1*.

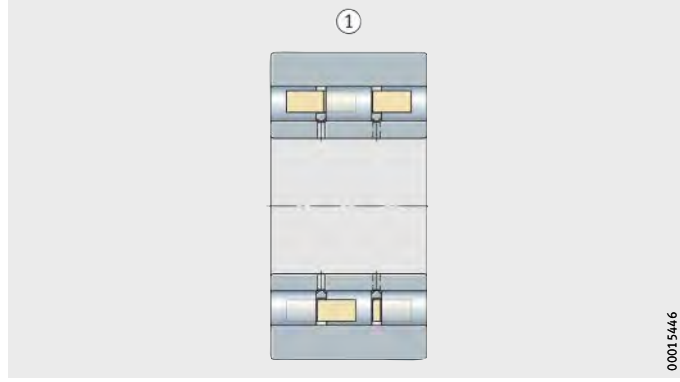

① Design 1

Figure 1
Back-up roller

Locating bearings
Design 2

The double row back-up rollers of this design have outer rings with three rigid ribs and two loose rib washers on the inner ring.
After mounting, the back-up roller is self-retaining and requires no axial guidance. The rollers are guided by a brass double comb cage.
In accordance with the lubrication method, these back-up rollers are supplied with or without seals, *Figure 2*.

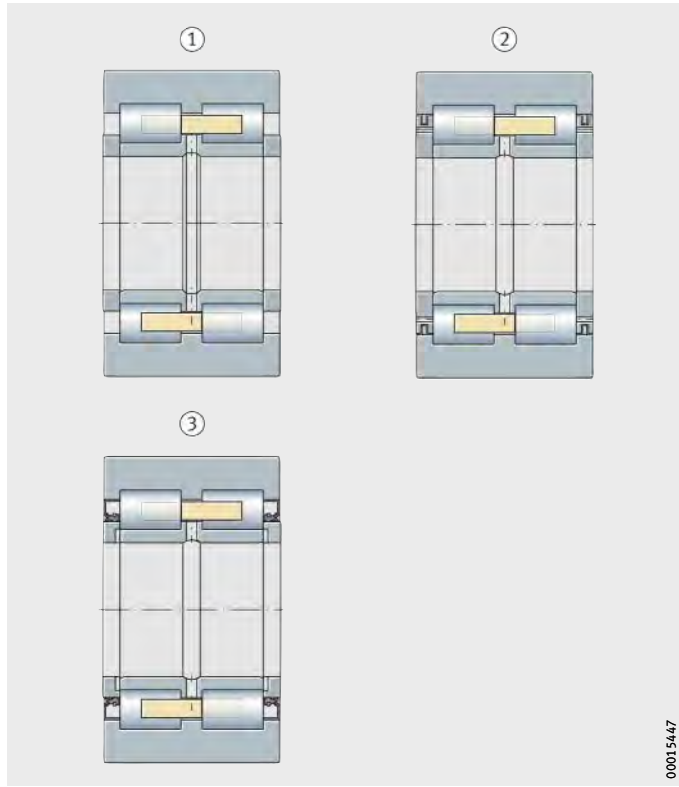

① Open
② With lamellar rings
③ With rotary shaft seals

Figure 2
Back-up rollers of Design 2

Materials

The inner rings and cylindrical rollers are made from rolling bearing steel. The outer rings can be chill hardened or made from case hardening steel.

Sealing

Back-up rollers of Design 1 are open. These and open back-up rollers of Design 2 are suitable for rolling emulsion lubrication.

For recirculating oil lubrication, back-up rollers of Design 2 with rotary shaft seals are selected.

Bearings with gap seals (lamellar rings) are suitable for minimal quantity lubrication.

Lubrication

Back-up rollers are designed such that the lubricant is distributed uniformly among the rollers and, in the case of back-up rollers lubricated with rolling emulsion, that the rolling emulsion can flow out of the bearings on both sides without hindrance.

Lubrication with rolling emulsion is cost-effective since this is already available in large quantities for the rolling process.
Due to the low viscosity of the rolling emulsion, a high volume flow through the bearings is necessary. The high rate of lubricant egress from the back-up rollers prevents the ingress of foreign matter into the bearings. Bearings without seals are suitable for rolling emulsion lubrication.

When using recirculating oil lubrication, the oil flows through the back-up rollers in its own recirculation system. Oils of higher viscosity can thus be used, allowing a longer operating life of the back-up rollers. The design must provide inlet and outlet holes.

For minimal quantity lubrication (pneumatic oil lubrication) an oil should be selected with a viscosity of at least 220 mm^2/s.
The supply of lubricant should be agreed with the manufacturer of the lubrication equipment.

Cages

Back-up rollers for multi-roll mills have solid brass cages.

Back-up rollers for multi-roll cold rolling mills

Design and safety guidelines

Application as back-up roller

The thick-walled outer rings of the back-up rollers can support high radial loads. If these rollers are used on a flat mating track, the outer rings undergo elastic deformation.

Compared with a rolling bearing supported in a housing bore, back-up rollers have a modified load distribution in the bearing.

The basic rating life is calculated using the effective dynamic load rating $C_{r\,w}$.

Application as bearing

If the back-up rollers are mounted in a housing bore as is normal with rolling bearings, the bearing rating life is calculated using the basic dynamic load rating C_r of the rolling bearing.

Equivalent dynamic load

For back-up rollers under dynamic loading, the following applies:

$$P = F_r$$

P kN
Equivalent dynamic bearing load for combined load
F_r kN
Radial dynamic bearing load.

Accuracy

The narrow tolerances for the rolled product require high bearing accuracy, especially in the radial runout of the outer rings and the bearing section height tolerance. This is achieved by heavily restricted manufacturing tolerances and subsequent sorting of all individual parts.

The back-up rollers are sorted in several section height groups. Each back-up roller is marked with the designation of the section height group. Back-up rollers of the same section height group are used for each support shaft. Further information is given in TPI 129, Back-up Rollers for Multi-roll Cold Rolling Mills.



Back-up rollers

Double row or multi-row

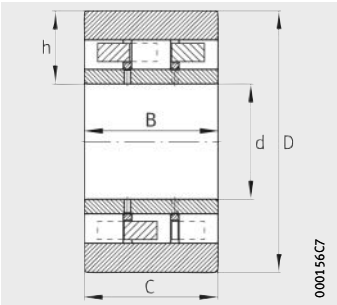

Design 1
Non-locating bearing

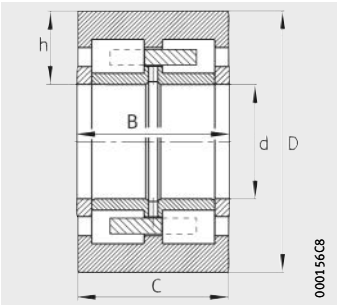

Design 2
Locating bearing, open

Dimension table · Dimensions in mm

Designation	Design	Mass	Dimensions				
		m	d	D	B	C	h
		≈kg					
Z-577888.WGTR	2[1)2)]	54,9	**130**	300,02	130	129	85,01
Z-578270.01.WGTR	2[2)]	56,5	**130**	300,02	132	129	85,01
Z-564604.WGTR	2[2)]	60	**130**	300,02	150	149	85
Z-548963.WGTR	2[1)2)]	67,4	**130**	300,02	161,5	160,5	85
Z-567455.01.WGTR	2[2)]	71,3	**130**	300,02	172,65	171,6	85
Z-567998.01.WGTR	2[3)5)]	73,5	**130**	300,02	172,65	171,6	85,01
Z-549722.WGTR	2[2)]	73,6	**130**	300,02	172,65	171,6	85,01
Z-549722.01.WGTR	2[1)2)]	73,6	**130**	300,02	172,65	171,6	85,01
Z-512497.03.WGTR	1[2)]	74,8	**130**	300,02	172,64	172,6	84,955
F-800115.01.WGTR	2[1)2)]	132	**180**	406,42	171,04	170	113,143
Z-564247.02.WGTR	2[1)2)]	125	**180**	406,4	171,04	170	113,2
Z-564247.WGTR	2[2)]	125	**180**	406,4	171,04	170	113,2
Z-527502.03.WGTR	1[2)]	130	**180**	406,42	171,04	171	113,143
Z-543307.01.WGTR	1[3)]	130	**180**	406,42	171,04	171	113,2
F-809717.WGTR	2[4)]	136	**180**	406,42	176	170	113,2
Z-514278.01.WGTR	1[2)]	150	**180**	406,42	217	217	113,143
F-804209.WGTR	2[2)5)]	174	**180**	406,4	224	220	113,2
Z-523247.02.WGTR	1[2)]	169	**180**	406,42	224	224	113,2
Z-523247.03.WGTR	1[3)]	169	**180**	406,42	224	224	113,2

1) Sealing with rotary shaft seals for recirculating oil lubrication.

2) Chill hardened outer ring.

3) Outer ring made from case hardening steel.

4) Back-up roller made from rolling bearing steel (chromium steel).

5) Sealing with lamellar rings for minimal quantity lubrication.

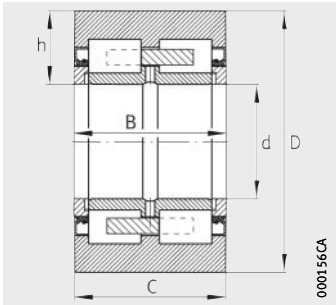

Design 2
With rotary shaft seal[1)]

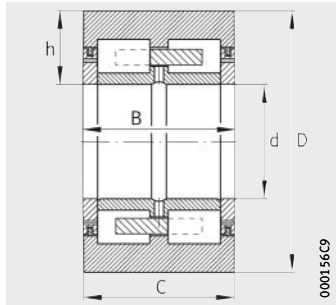

Design 2
With gap seals[5)]

Basic load ratings			
Bearing		Back-up roller	
dyn. C_r kN	stat. C_{0r} kN	dyn. C_{rw} kN	stat. C_{0rw} kN
1 040	1 560	760	1 180
1 040	1 560	760	1 180
1 200	1 860	890	1 450
1 200	1 880	910	1 490
1 440	2 370	1 010	1 680
1 440	2 370	1 010	1 680
1 440	2 370	1 010	1 680
1 440	2 370	1 010	1 680
1 500	2 700	1 030	1 810
1 570	2 650	1 170	2 040
1 710	3 000	1 250	2 190
1 710	3 000	1 250	2 190
2 080	3 850	1 420	2 550
2 080	3 850	1 420	2 550
1 710	3 000	1 250	2 190
2 500	4 900	1 720	3 250
1 910	3 450	1 420	2 600
2 600	5 100	1 790	3 350
2 600	5 100	1 790	3 350



Spherical plain bearings

Technical principles
Spherical plain bearings, maintenance-free
Spherical plain bearings, requiring maintenance

Spherical plain bearings

Spherical plain bearings **874**

Spherical plain bearings are ready-to-fit, standardised machine elements. The outer ring with its concave inner slideway and the inner ring with its crowned outer slideway facilitate spatial adjustment motion.

In the large bearing range, the bearings are available as radial and axial spherical plain bearings. They can support static loads, are suitable for tilting and swivel motion, compensate for shaft misalignment, are not subject to edge stresses under misalignment and allow substantial manufacturing tolerances in the adjacent construction.

Maintenance-free **874**

These spherical plain bearings are completely maintenance-free. They are used where particular requirements for operating life apply in conjunction with maintenance-free operation or where, for reasons of lubrication, bearings with metallic sliding contact surfaces are not suitable, for example under unilateral load.

The standard sliding layer used is ELGOGLIDE®-800.

Requiring maintenance **890**

These bearings correspond in their construction to the maintenance-free designs but are lubricated via the outer and inner ring.

They transmit movements and forces with low moment levels – thus keeping bending stresses away from the construction elements – and are particularly suitable for alternating loads with impact and shock type stresses.

The sliding contact surface is the metallic combination steel/steel.

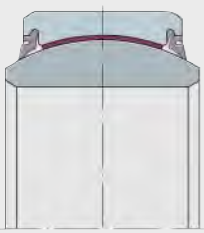

GE..-UK-2RS

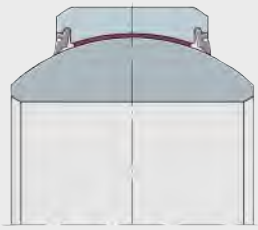

GE..-FW-2RS

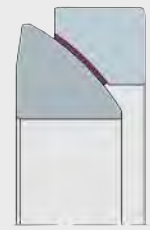

GE..-AW

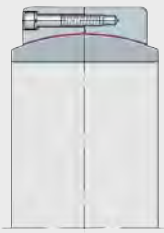

GE..-DW



GE..-DW-2RS2

00015849





GE..-DO

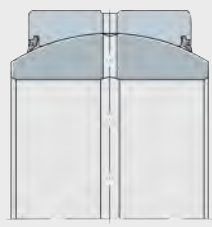

GE..-DO-2RS

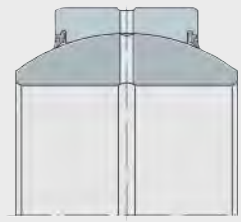

GE..-FO-2RS

0001584A

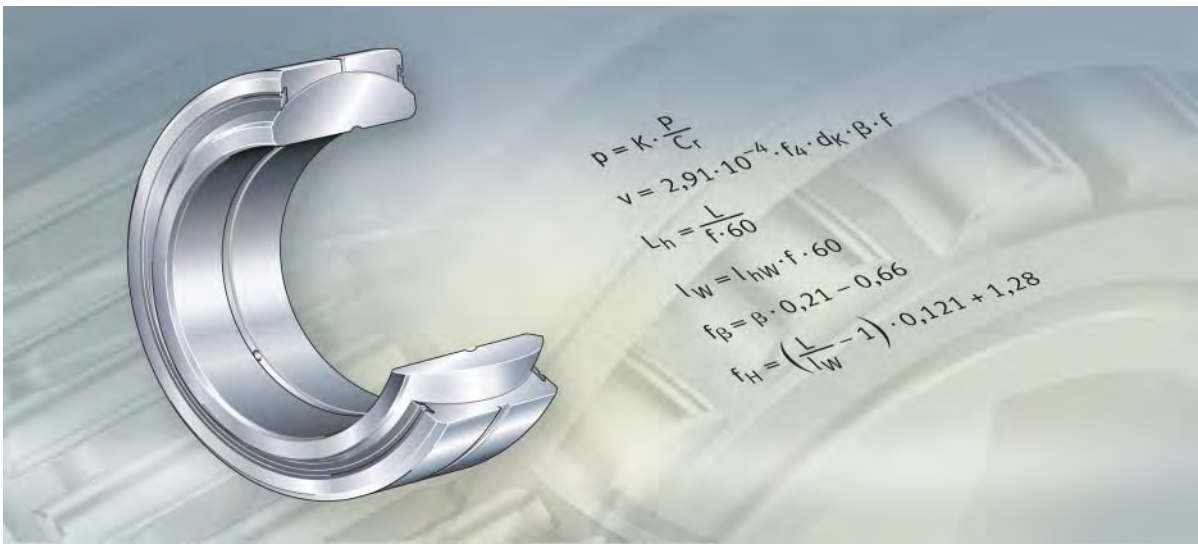

Technical principles

Load carrying capacity and life
Friction
Sliding layers for maintenance-free spherical plain bearings
Lubrication
Internal clearance
Design of bearing arrangements
Mounting and dismounting

Technical principles

		Page
Load carrying capacity and life	Basic load ratings	853
	Basic dynamic load rating	853
	Basic static load rating	853
	Rating life	854
	Concentric constant force F	854
	Combined loading by radial and axial forces	854
	Variable bearing load and equivalent operating values	855
	Calculation service	855
	Operating life	856
	Dimensioning of spherical plain bearings	856
	Predimensioning	856
Friction and increases in temperature	Friction behaviour	857
	Running-in phase of maintenance-free spherical plain bearings	858
Sliding layers for maintenance-free spherical plain bearings	ELGOGLIDE® sliding layers	859
Lubrication	Principles	860
	Functions of the lubricant	860
	Grease lubrication	861
	Running-in phase	861
	Relubrication	861
Internal clearance	Radial internal clearance of radial spherical plain bearings requiring maintenance	862
	Axial internal clearance	862

Technical principles

		Page
Design of bearing arrangements	Design of shaft and housing bore	863
	Radial location of spherical plain bearings	863
	Spherical plain bearings requiring maintenance	863
	Maintenance-free spherical plain bearings	864
	Application as locating bearings	864
	Application as non-locating bearings (between shaft and bearing bore)	864
	Axial location of spherical plain bearings	865
	Non-locating bearing side	865
	Location by retaining rings	865
	Location by spacer rings	866
	Location by spacer sleeve and sealing cover	866
	Sealing of the bearing position	867
Mounting and dismounting	Mounting	868
	Guidelines	868
	Delivered condition and storage	868
	Unpacking of bearings	868
	Tools for thermally assisted mounting	869
	Checking the adjacent construction	869
	Mechanical assistance	870
	Thermal assistance	871
	Mounting by means of refrigeration	871
	Adhesive bonding of bearing rings	871
	Positioning of the joint	872
	Dismounting	872
	Precautions for dismounting	873

Load carrying capacity and life

Basic load ratings

Basic load ratings are bearing-specific key data that are not standardised and may differ from manufacturer to manufacturer. They are derived from the material-specific load parameters K and the projected load-bearing area of the bearing in each case.

Basic dynamic load rating

The basic dynamic load rating C_r (C_a) is used in cases of dynamic loading. A spherical plain bearing is subjected to dynamic loading if it performs swivel, tilting or rotary motion under load.

The basic dynamic load rating is the maximum permissible dynamic load. It can only be utilised to the full if the load acts in a purely radial manner in radial spherical plain bearings and in a purely axial, concentric manner in axial spherical plain bearings.

If the basic dynamic load rating is utilised to the full, there is often a considerable reduction in the operating life of the bearings. The degree to which the basic load rating is utilised should therefore always be matched to the required operating life, see also section Predimensioning, page 856.

Basic static load rating

The basic static load rating C_{0r} (C_{0a}) is used if a spherical plain bearing is subjected to load while stationary.

It indicates the load that the spherical plain bearing can support at room temperature without damage to the sliding surfaces. This is subject to the precondition that the components adjacent to the bearing must prevent deformation of the bearing.



If the basic load rating C_{0r} (C_{0a}) is utilised to the full, the shaft and housing must be made from high strength materials.



Rating life

The calculation of the theoretical rating life is based on a large number of laboratory tests and takes account of certain operational data.

The rating life is defined as the number of motion cycles or operating hours that can be achieved by the majority of a sufficiently large number of spherical plain bearings under identical operating conditions before certain failure criteria are met.

The failure criteria are test limit values defined by the manufacturer that are related to a quantity of wear – as a function of the bearing size – or an upper friction value that is exceeded.

The quantity of wear and the increase in friction are dependent on the sliding contact surface and the application.
Under identical operating conditions, the operating life achieved may therefore differ significantly.

The calculation of the theoretical rating life gives comparative values for the bearings. They give information about the higher or lower performance of the selected bearings.



For calculation of the rating life, see Catalogue HG 1, Plain Bearings.

Concentric constant force F

Load values can be applied directly in the calculation of the rating life if they act in a purely radial manner on radial spherical plain bearings and in a purely axial, concentric manner on axial spherical plain bearings. The load value F for calculating the rating life is, in this case, the calculation value P (F = P).

Combined loading by radial and axial forces

If spherical plain bearings are subjected simultaneously to radial and axial forces, the equivalent calculation value P must be used in the rating life equation. This value has the same effect on the rating life as the forces acting in combination.

For radial spherical plain bearings, the following applies, *Figure 1*, page 855:

$$P = X \cdot F_r$$

For axial spherical plain bearings, the following applies, *Figure 2*, page 855:

$$P = Y \cdot F_a$$

P N
Equivalent dynamic bearing load
F_r N
Radial dynamic bearing load
F_a N
Axial dynamic bearing load
X –
Factor for the axial load in radial spherical plain bearings, *Figure 1*, page 855
Y –
Factor for the radial load in axial spherical plain bearings, *Figure 2*, page 855.

F_a = axial dynamic bearing load
F_r = radial dynamic bearing load
X = factor for the axial load in radial spherical plain bearings

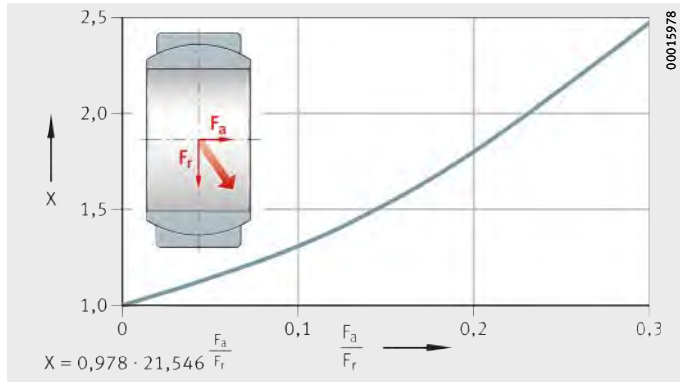

Figure 1
Radial spherical plain bearings, combined loading

F_a = axial dynamic bearing load
F_r = radial dynamic bearing load
Y = factor for the radial load in axial spherical plain bearings

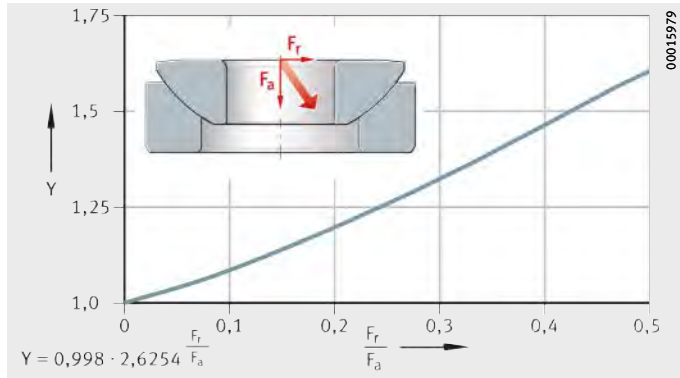

Figure 2
Axial spherical plain bearings, combined loading

Variable bearing load and equivalent operating values

If the quantity of a force varies in a linear manner during swivel motion, the equivalent calculation value P must be used.
This value has the same effect on the rating life as the variable bearing load occurring in practice.

$$P = \sqrt{\frac{F^2_{min} + F^2_{max}}{2}}$$

P N
Equivalent dynamic bearing load
F_{max} N
Maximum bearing load
F_{min} N
Minimum bearing load.

Calculation service

The influences that must be taken into consideration in calculation are expressed as mathematical functions.
As a result, the calculation principles can be programmed, eliminating the need for time-consuming manual calculation work.

Furthermore, there are calculation programs that can be applied by agreement.

The theoretical rating life calculations are only valid for the products described in this catalogue. They cannot be transferred to other products under any circumstances.

Operating life

The operating life is the number of motion cycles or operating hours achieved in practice by a spherical plain bearing. It may differ from the calculated theoretical rating life.

The operating life is dependent on factors including:

- the type and magnitude of load
- any shocks occurring
- the sealing arrangement
- corrosion
- contamination
- maintenance.

Dimensioning of spherical plain bearings

The required size of a spherical plain bearing depends on the requirements placed on its rating life, load carrying capacity and operational reliability.

Predimensioning

If the basic dynamic load rating C_r (C_a) is utilised to the full, there is often a considerable reduction in the operating life of bearings with metallic sliding surfaces. The degree to which the basic load rating is utilised should therefore always be matched to the required operating life. This is indicated by the ratio C_r (C_a)/P.

The ratio C_r (C_a)/P must not be less than 1.
Depending on the application and bearing type, it is between 1 and 10.

Predimensioning is not a substitute for more extensive bearing calculation.

The load ratios C_r (C_a)/P required for predimensioning of maintenance-free spherical plain bearings or spherical plain bearings requiring maintenance are shown in the tables.

Load ratio for maintenance-free spherical plain bearings under dynamic load – guide values

Spherical plain bearing	Ratio C_r/P or C_a/P	
Series	Alternating load	Unilateral load
GE..-UK-2RS	suitable at ≧ 2	suitable from 5 to 1
GE..-FW-2RS	suitable at ≧ 2	suitable from 5 to 1
GE..-DW	suitable at > 2	suitable from 3 to 1
GE..-DW-2RS2	suitable at > 2	suitable from 3 to 1
GE..-AW	suitable at ≧ 2	suitable from 5 to 1

Load ratio for spherical plain bearings requiring maintenance under dynamic load – guide values

Spherical plain bearing	Ratio C_r/P	
Series	Alternating load	Unilateral load
GE..-DO-2RS	suitable from 3 to 1	suitable from 4 to 1,7
GE..-DO	suitable from 3 to 1	suitable from 4 to 1,7
GE..-FO-2RS	suitable from 3 to 1	suitable from 4 to 1,7

Friction and increases in temperature

Friction is essentially dependent on:

- the sliding contact surface
- the load
- the sliding velocity
- the bearing temperature
- the lubrication condition
- the quality of the sliding surfaces.

Maintenance-free spherical plain bearings must not be lubricated. The PTFE particles to be transferred do not adhere to oily surfaces. Lubricant therefore prevents the necessary smoothing of the surface.

If spherical plain bearings that have undergone dry running-in are then lubricated, this damages the internal tribology and reduces the operating life.

Friction behaviour

The friction behaviour changes during the operating life. Bearings that have been well run in give the lowest friction values. During the running-in and failure phases, the values are sometimes significantly higher.

For the running-in phase of maintenance-free spherical plain bearings, see page 858.



Running-in phase of maintenance-free spherical plain bearings

During the running-in phase, PTFE particles are transferred from the sliding layer of the outer ring to the opposing running surface of the inner ring. This fills in the areas of slight roughness in the inner ring surface. A long operating life is only achieved with this tribologically smooth surface.

With new spherical plain bearings, the bearing frictional torque may be significantly higher during the early running-in phase due to:

- plastic moulding of the PTFE material onto the surface structure of the opposing running surface
- the as yet incomplete internal bearing tribology, the deposit of PTFE particles on the opposing running/functional surface (PTFE/PTFE friction), *Figure 3*.

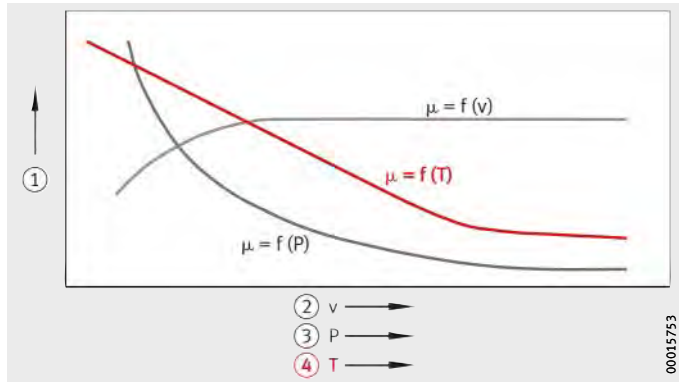

① Coefficient of friction μ
② Sliding velocity v
③ Load P
④ Temperature T

Figure 3
Friction behaviour of maintenance-free sliding materials based on PTFE

Wear behaviour

The wear behaviour of maintenance-free spherical plain bearings is shown in *Figure 4*.

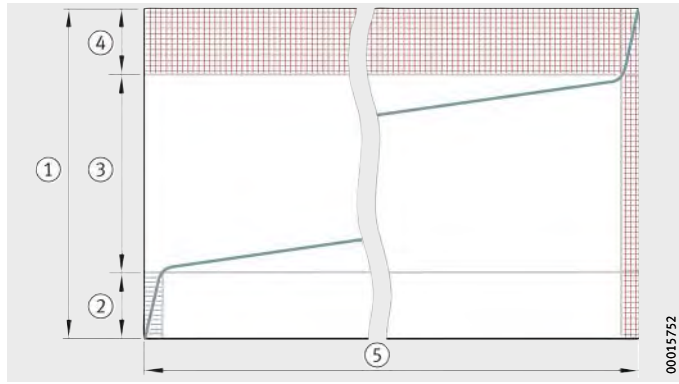

① Wear
② Running-in phase
③ Main wear phase
④ Failure phase
⑤ Rating life

Figure 4
Wear behaviour of maintenance-free spherical plain bearings

Sliding layers for maintenance-free spherical plain bearings

ELGOGLIDE® sliding layers

Maintenance-free spherical plain bearings have special sliding layers based on PTFE (polytetrafluorethylene).

In terms of performance capability, these are:

- ELGOGLIDE®, *Figure 5*
  - ELGOGLIDE®-800, the highest performance sliding layer
  - ELGOGLIDE®-600, the sliding layer for low friction.

These materials form the slideway of the outer ring or the housing locating washer. They transmit the forces occurring and perform the lubrication function. Additional lubrication of the bearings must not be carried out.

The sliding layer comprises 0,5 mm thick ELGOGLIDE®, is embedded in synthetic resin and attached by a high strength bond to the supporting body, *Figure 5*.

The flow behaviour of the sliding layer is, in conjunction with the supporting body, almost negligible even under very high load.

The adhesive bond is resistant to moisture and does not undergo swelling.

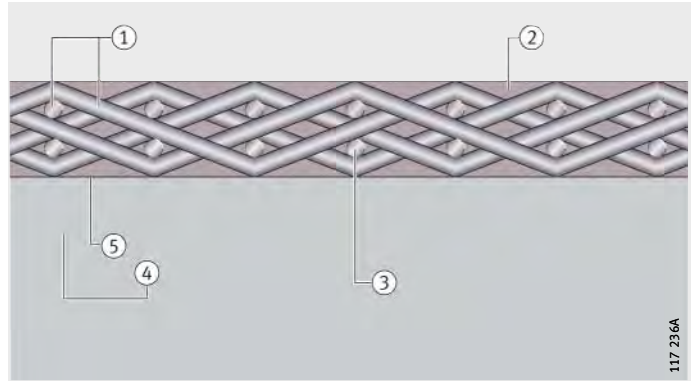

① PTFE fabric, comprising PTFE and support fibres
② Resin matrix
③ Support fibres
④ Steel support body
⑤ Adhesive bond

Figure 5
ELGOGLIDE®, cross-section

ELGOGLIDE® designs

For the different requirements, the following are available:

- ELGOGLIDE®-800
  The standard material for very high contact pressures from 25 N/mm^2 to 300 N/mm^2 and a long operating life.
- ELGOGLIDE®-600
  The material for contact pressures from 1 N/mm^2 to 100 N/mm^2 and with low coefficients of friction even at low contact pressures.
- ELGOGLIDE®-800-X-life
  In the series GE..-DW, GE..-DW-2RS2 and GE..-AW, this material combines high load carrying capacity with low coefficients of friction and low running-in wear. This material is only available in the series indicated.

Lubrication

Principles

Large spherical plain bearings requiring maintenance and with a steel/steel sliding contact surface must be lubricated.
They are subjected to a special surface treatment and supplied already provided with MoS_2. Nevertheless, the quality of maintenance has a considerable influence on the function and wear of spherical plain bearings.

Functions of the lubricant

The lubricant should:

- reduce friction
- form a lubricant film sufficiently capable of supporting loads on the contact surfaces and thus prevent wear and premature fatigue
- provide the bearing with additional protection against contamination if grease lubrication is used
- give protection against corrosion.



It is more important to use a suitable lubricant than to provide generously defined, short lubrication intervals.
The lubricant must always be chosen in consultation with lubricant manufacturers.

Criteria for lubricant selection

In the case of grease lubrication, the following criteria must be considered:

- the load
- the load direction
- the swivel angle
- the sliding velocity
- the ambient temperature
- the environmental conditions.

Suitable lubricants have a content of approx. 3% MoS_2 or solid additives based on calcium and zinc phosphate compounds. Even under high contact pressure, these additives separate the sliding surfaces from each other.

Grease lubrication

For standard applications with a steel/steel sliding contact surface, suitable greases are conventional, corrosion-inhibiting, high-pressure types with a lithium soap base, EP additives and solid lubricant additives.

Running-in phase

The running-in phase has a significant influence on the later wear behaviour of the bearing. Correct lubrication is therefore of particular importance at this point.

During running-in, the surfaces of the contact zones undergo smoothing and elastic moulding. This gives additional load-bearing areas and reduces the strain on the material.

Guidelines on greasing

During the running-in phase, the pressure in the bearing is particularly high. Spherical plain bearings are therefore manganese phosphated and treated with MoS_2. The running-in wear phase proceeds all the more favourably the more MoS_2 is embedded in the porous-crystalline manganese phosphate.

This process is most effective if the bearing runs undergoes ten swivel movements under load without additional greasing and is then provided with its initial greasing.

If this is not possible, the initial greasing must be metered carefully in order to avoid flushing an excessive quantity of MoS_2 out of the bearing.

Relubrication

During relubrication, old grease is replaced by fresh grease. At the same time, the grease flushes wear debris and contaminants out of the bearing.

The bearings must be relubricated periodically. The relubrication intervals should not be established arbitrarily but determined by calculation or in consultation with the lubricant manufacturer.

If relubrication is carried out too frequently, the operating life of the bearing may be reduced, since the friction of spherical plain bearings always increases for a short time after relubrication.

Relubrication conditions

The grease used for relubrication must be the same as that used in initial greasing.

If other greases are used, the miscibility and compatibility of the greases must be checked.

Relubrication should always be carried out as follows:

- with the bearing still warm from operation
- before the bearing comes to rest if safe to do so
- before extended breaks in operation.

Relubrication should continue until a fresh collar of grease appears at the seal gaps. Old grease must be allowed to leave the bearing unhindered.

Spherical plain bearings requiring maintenance must be lubricated via the outer and inner ring.

Internal clearance

Radial internal clearance of radial spherical plain bearings requiring maintenance

The radial internal clearance of spherical plain bearings requiring maintenance and with a steel/steel sliding contact surface is defined as the distance by which the inner ring can be moved in a radial direction relative to the outer ring from one extreme position to the precisely opposite extreme position.

The radial internal clearance is, in accordance with DIN ISO 12240-1, subdivided into three groups, see table.
This is subject to the precondition that the housing bore, apart from the correction of geometrical inaccuracies, causes no dimensional changes in the bearing.

Radial internal clearance groups

Internal clearance group	Description	Standard	Application
CN	■ Normal radial internal clearance ■ CN is not included in bearing designations	ISO 12240-1	Under normal operating conditions and with the recommended fits, this gives optimum operating clearance
C2[1)2)]	■ Internal clearance < CN (suffix C2)		For bearing arrangements with very small clearance
C3	■ Internal clearance > CN (suffix C3)		For bearing rings with press fits or a large temperature differential between the inner and outer ring

1) Relubrication only possible with a tilt angle $\alpha = 0°$.

2) Example of bearing with restricted internal clearance: GE220-DO-2RS-C2.

Axial internal clearance

The axial internal clearance is defined as the distance by which the inner ring can be moved in an axial direction relative to the outer ring from one extreme position to the precisely opposite extreme position.

It is dependent on the bearing geometry and is in a direct relationship with the radial internal clearance.
Depending on the bearing type, it may be several times greater than the radial internal clearance.

Design of shaft and housing bore

The seating surfaces of the bearings should be designed such that the forces transmitted through the bearing:

- do not cause unacceptable geometrical changes to the shaft and housing
- do not cause permanent deformation of the spherical plain bearing.

Where spherical plain bearings are subjected to high loads of $p \geqq 80$ N/mm^2, the shaft and housing must be checked.

Recommendations for the surface quality (shaft and housing bore) are given in the values according to the table.

Roughness values of bearing seating surfaces

Bearing seating surface	Roughness[1] µm
Shaft	$\leqq R_z 10$
Housing bore	$\leqq R_z 16$

[1] If larger roughness values are present, please contact us.

Radial location of spherical plain bearings

In spherical plain bearings, the sliding motion should take place between the curved sliding surfaces of the inner and outer ring. The quality and treatment of the surface is matched to this requirement. The internal clearance and osculation of the sliding surfaces must therefore be in a balanced relationship.

Spherical plain bearings requiring maintenance

The operating life of spherical plain bearings requiring maintenance is reduced by:

- preload on the sliding surfaces
- excessively small load-bearing areas on the sliding surfaces due to unacceptably large internal clearance.

Recommendations for fits: see table.

If tighter fits are necessary, for example under high, impact type loads, the operating clearance must be checked by means of calculation.

Shaft and housing fits

Spherical plain bearing	Internal clearance group	Material	
		Housing/shaft Steel/steel	Housing/shaft Light metal/steel
Radial spherical plain bearing	C2	K7/j6	M7/j6
	CN (normal)	M7/m6	N7/m6
	C3	M7/m6	N7/m6
Axial spherical plain bearing	–	M7/n6	–

Maintenance-free spherical plain bearings

Looser fits may be used with maintenance-free spherical plain bearings. Due to the sliding contact surface hard chromium/PTFE, the bearing friction in this case is lower than that of spherical plain bearings requiring maintenance.

Recommendations for fits: see table.

Shaft and housing fits

Spherical plain bearing	Bore d	Material	
		Housing/shaft Steel/steel	Housing/shaft Light metal/steel
Radial spherical plain bearing	≦ 300 mm	K7/j6	M7/j6
	> 300 mm	J7/j6	–
Axial spherical plain bearing	–	M7/m6	–

Application as locating bearings

The shaft and bore fits must be selected such that no sliding motion occurs on the shaft or in the housing bore. Tight fits prevent damage to the adjacent construction.

If tight fits are present, elastic deformations of the bearing rings reduce the internal clearance of the spherical plain bearing.

These deformations occur as a result of:

- interference between the housing and outer ring (constriction of the outer ring)
- interference between the shaft and bearing bore (expansion of the inner ring).

If a tight fit is not possible, the bearing rings must be secured against axial sliding motion on the shaft or in the housing, see section Axial location of spherical plain bearings, page 865.

Application as non-locating bearings (between shaft and bearing bore)

The surface of the shaft must be wear-resistant as follows:

- surface hardness ≧ 56 HRC
- surface roughness ≦ R_z10.

Spherical plain bearings requiring maintenance should then only be lubricated via the shaft.

Axial location of spherical plain bearings

Spherical plain bearings under high loads undergo elastic deformation. This leads to relative micromovements in the fits. As a result, the bearing rings can creep in an axial direction despite a tight fit.

In order to prevent axial displacement, the bearing rings must always be located axially.

Non-locating bearing side

The axial displacement should occur between the shaft and bearing bore because:

- the length/diameter ratio of the guidance is more favourable at this point than on the outer ring of the bearing
- the axially split outer ring expands under axial load and can therefore jam in the bearing location
- no wear should occur in the housing bore.

Location by retaining rings

Location can usefully be carried out using retaining rings, which allow the bearings to be easily mounted and dismounted, *Figure 6*.

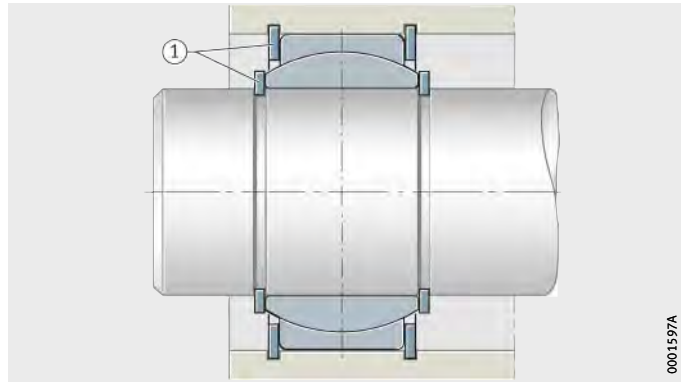

① Retaining rings

Figure 6
Location by retaining rings

Location by spacer rings

Spacer rings between the bearing ring and adjacent component are suitable if the shaft must not be weakened by annular slots or the bearings are to be axially preloaded, *Figure 7*.

Axial preload prevents rotary motion between the bearing ring and adjacent construction even with a loose fit.

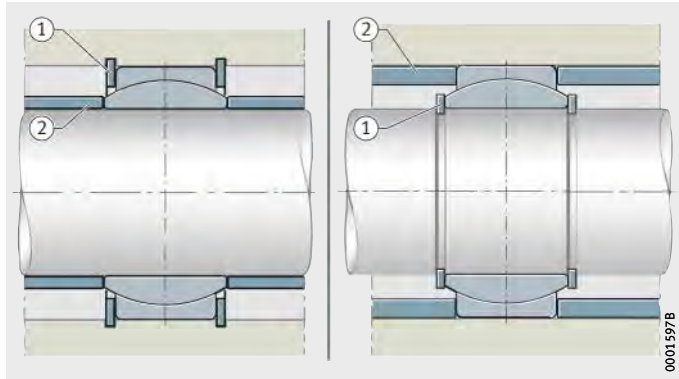

① Retaining rings
② Spacer rings

Figure 7
Location by retaining rings and spacer rings

Location by spacer sleeve and sealing cover

It is also possible to locate spherical plain bearings with the aid of a spacer sleeve or end plate and a sealing cover, *Figure 8* and *Figure 9*.

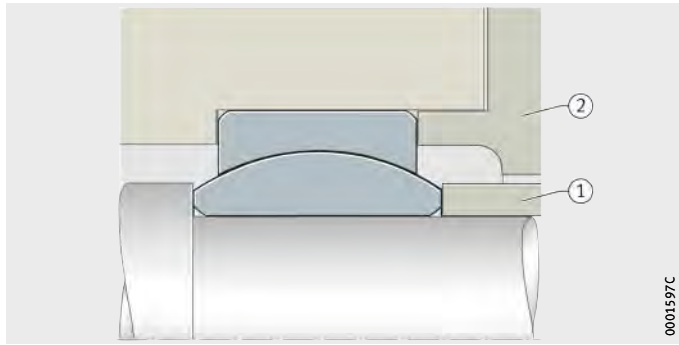

① Spacer sleeve
② Sealing cover

Figure 8
Location by spacer sleeve and sealing cover

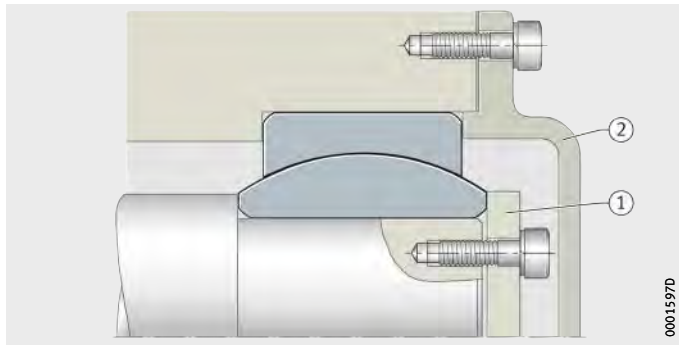

① End plate
② Sealing cover

Figure 9
Location by end plate and sealing cover

Sealing of the bearing position

Additional sealing ensures a long operating life and simultaneously acts to prevent the ingress of contamination and moisture.
In the design (selection) of this sealing arrangement, it must be borne in mind that the clearance of the bearing arrangement increases due to the wear of the sliding layer.

If bearings are subjected to higher temperatures, an open bearing with external heat-resistant seals can be used, *Figure 10*.

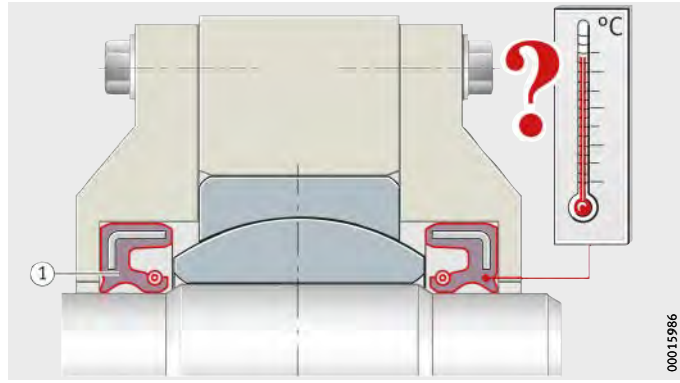

① Rotary shaft seal

Figure 10
Open spherical plain bearing with external seals

Mounting

Spherical plain bearings must be handled very carefully both before and during mounting. Problem-free functioning is substantially dependent on the care taken in mounting. The bearings will only achieve their maximum operating life and functional capability if they are mounted correctly.

Guidelines

The guidelines on mounting must be observed.
If not, there is a direct or indirect hazard to personnel, the product or the adjacent construction.

The assembly area must be kept clean and free from dust.

The bearings must be protected against moisture and aggressive media.

The bearings must always be located concentrically.

Mounting may only be carried out by trained personnel.
If bearings are mounted incorrectly, no liability can be accepted.

Large spherical plain bearings should only be transported using the eye bolts supplied and have threaded holes on the end faces of the inner and outer rings for this purpose, *Figure 11*.

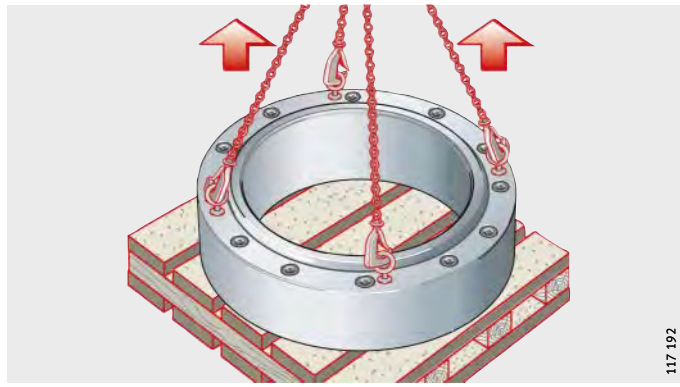

Figure 11
Transport by means of eye bolts

Delivered condition and storage

The surface of spherical plain bearings is coated with a preservative. Any change, irrespective of the bearing type, will reduce the operating life.

The bearings must only be stored:

- in the original packaging
- in dry, clean rooms with the temperature as constant as possible
- at a relative humidity of max. 65%.

Unpacking of bearings

Spherical plain bearings should only be removed from their packaging immediately before mounting:

- Hands should be kept clean and dry and protective gloves worn if necessary (perspiration leads to corrosion).
- If the original packaging is damaged, the products must be checked.
- If the products are contaminated, they must be wiped with a clean cloth only.

Tools for thermally assisted mounting

In order to reduce the forces required for mounting, the spherical plain bearings can be heated: heating cabinets with a controllable thermostat are suitable for heating. The advantages include uniform heating, no contamination of components and the absence of long preheating times.

Local overheating should be avoided; the bearing temperature must be monitored using a thermometer.

Information in the catalogue and the manufacturer's data on grease and seals must be observed.

Checking the adjacent construction

Before spherical plain bearings are mounted, the adjacent construction must be checked for the following:

- the quality of the bearing seating surfaces of the shaft and housing bore
- the dimensional and geometrical accuracy of the seating and locating faces
- the shaft and housing seat
- the lead chamfer on the shaft and housing bore from 10° to 20°, *Figure 12*.

Any burrs present must be removed.

If tight fits are present or mounting conditions present difficulties, the surface of the shaft and housing bore should be lightly oiled.

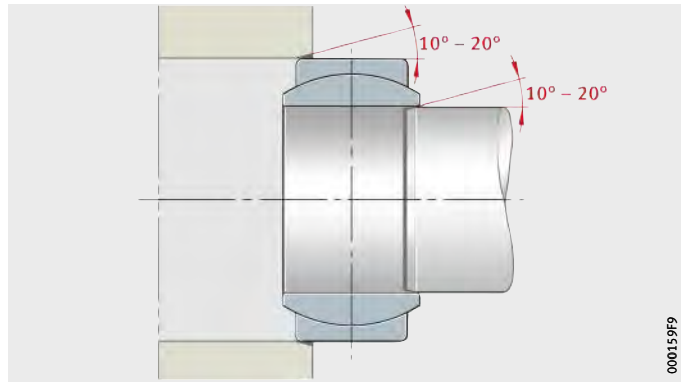

Figure 12
Lead chamfers

Mechanical assistance

Avoid direct blows with a hammer and drift on the end faces of the bearing rings, since this can lead to microcracks in the bearing.

Always apply mounting forces to the bearing ring to be mounted, *Figure 13*. If these forces are directed through the sliding surfaces, this could lead to jamming of the bearings during mounting.

When mounting the bearings on a shaft and in a housing, mounting tools must be used that act simultaneously on the end faces of the inner and outer ring, *Figure 13*.

Larger bearings must be mounted using special mounting equipment, *Figure 14*. As the bearing diameter increases, so do the mounting forces required and simple impact type tools are no longer adequate in these cases.

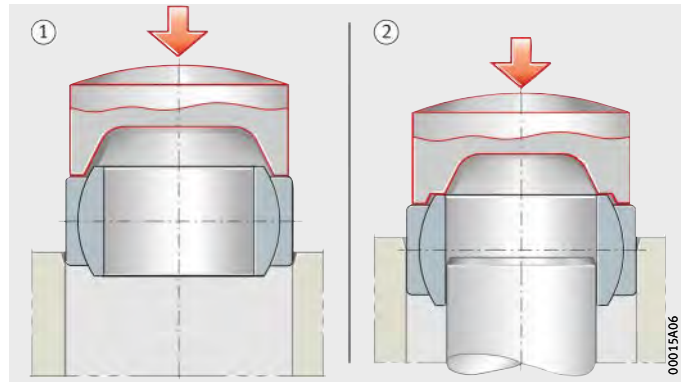

① Mounting in housing
② Simultaneous mounting on shaft and in housing

Figure 13
Mounting forces and bearing ring to be mounted

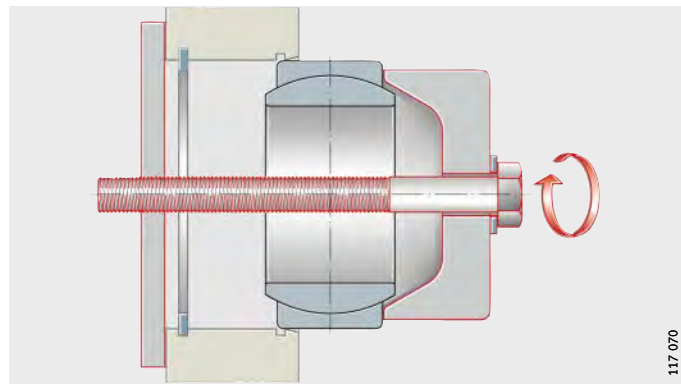

Figure 14
Special mounting equipment for larger bearings

Thermal assistance

In order to reduce the mounting forces, spherical plain bearings can be heated.

Do not heat bearings to more than +130 °C,
since higher temperatures will damage the seals in sealed bearings.

Do not heat spherical plain bearings in an oil bath.
In bearings with a steel/steel sliding contact surface, this will change the concentration of molybdenum disulphide on the sliding surfaces.

Do not heat bearings using a naked flame.
The material undergoes excessive localised heating, reducing its hardness.
Stresses also occur in the bearing and seals may melt.

Maintenance-free sliding layers could be damaged.

Mounting by means of refrigeration

The structure of the rings of spherical plain bearings will change at temperatures below –61 °C. Due to the structural change, their volume may increase; the change to the tolerances may lead to jamming of the bearing.

If this mounting method is to be used, the bearing rings can be supplied with appropriate heat treatment. In this case, please contact us.

Adhesive bonding of bearing rings

If the recommended fits are adhered to, adhesive bonding of the bearing rings is not generally necessary.

Adhesives may only be used on spherical plain bearings with a steel/steel sliding contact surface under the following conditions:

- The surfaces to be bonded must be clean and free from grease.
- The raceways must be cleaned using a cleaning agent and well lubricated using a paste with a high MoS_2 content.
- It must be ensured that the lubricant ducts and lubricant holes are not blocked by adhesive.

Positioning of the joint

In radial spherical plain bearings with split outer rings (split 2×), the joints must be positioned at 90° to the main load direction, *Figure 15*.

The lubrication holes of bearings requiring maintenance are thus positioned directly in the load zone. This allows good lubricant distribution in the load zone area.

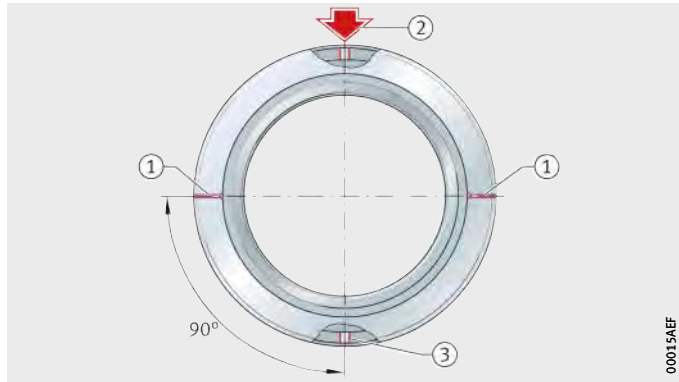

① Joint
② Main load direction
③ Lubrication hole

Figure 15
Position of joint in main load direction

Dismounting

Even if the load is applied to the ring to be dismounted in accordance with the specification, the frictional contact of the other ring due to the fit presents difficulties in dismounting.

Depending on the joint interference pressure, the inner ring will be constricted and the outer ring will be expanded, *Figure 16*.
The extraction forces also increase with increasing joint interference pressure.

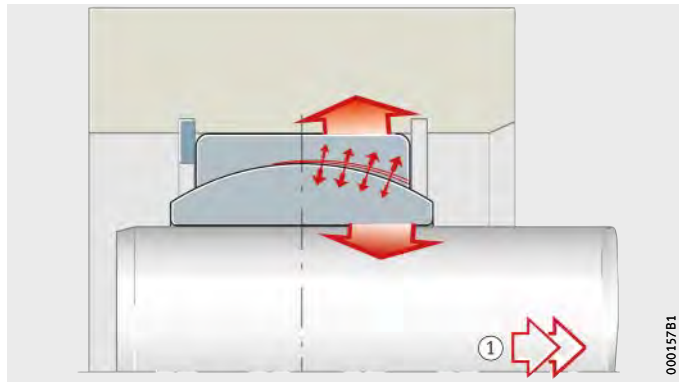

① Motion

Figure 16
Constriction of the inner ring and expansion of the outer ring

Precautions for dismounting

If the following precautions are taken during design, this will make dismounting of the bearings easier:

- a threaded hole for an extraction screw in the shaft, *Figure 17*
- threaded holes for extraction screws in the housing, *Figure 18*
- milled areas on the stud for the jaws of the removal device, *Figure 18*.

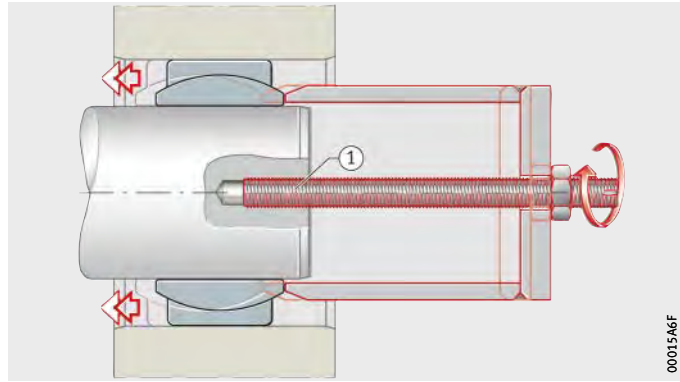

① Threaded hole

Figure 17
Threaded holes in the shaft

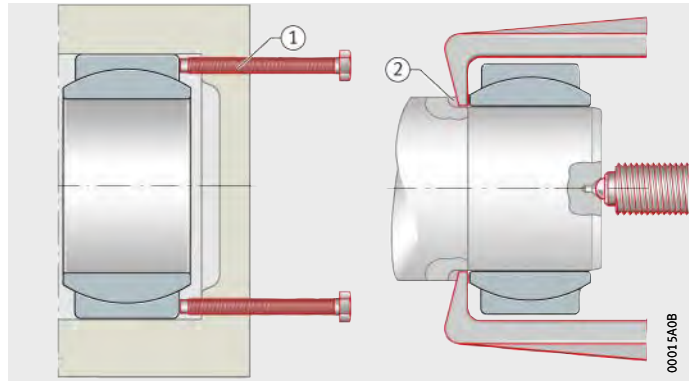

① Threaded holes
② Milled areas

Figure 18
Threaded holes in the housing and milled areas for extractors

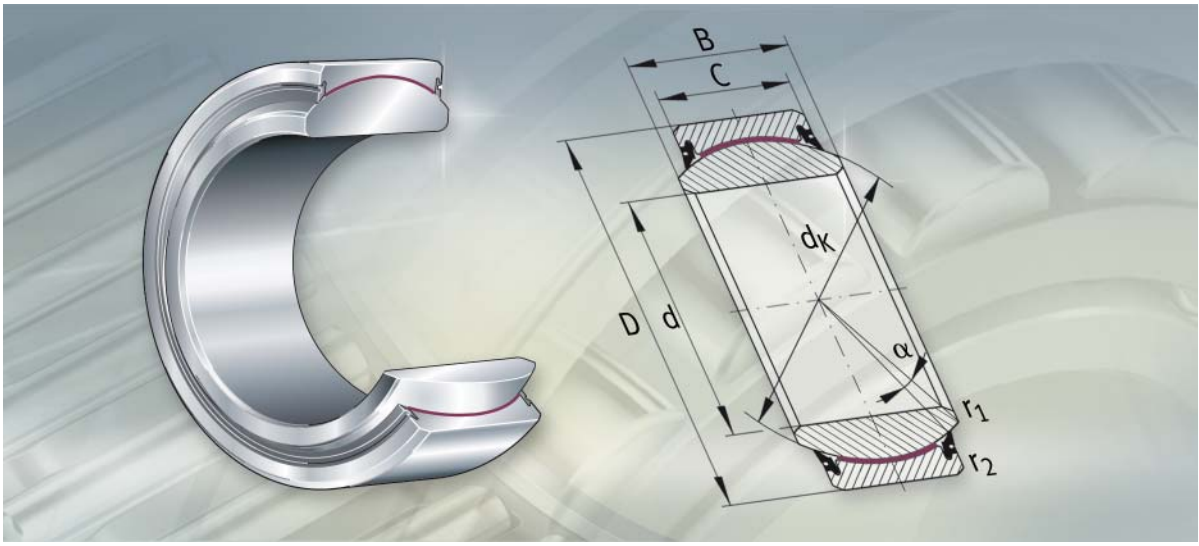

Spherical plain bearings, maintenance-free

Radial spherical plain bearings
Axial spherical plain bearings

Spherical plain bearings, maintenance-free

		Page
Product overview	Spherical plain bearings, maintenance-free	876
Features	Radial spherical plain bearings	877
	X-life	878
	Sealing	878
	Axial spherical plain bearings	878
	Operating temperature	879
	Suffixes	879
Design and safety guidelines	Support of radial forces	880
Accuracy	Spherical plain bearings with split outer ring	881
Dimension tables	Radial spherical plain bearings, maintenance-free, DIN ISO 12240-1, dimension series E, sealed	882
	Radial spherical plain bearings, maintenance-free, DIN ISO 12240-1, dimension series C, open or sealed	884
	Radial spherical plain bearings, maintenance-free, DIN ISO 12240-1, dimension series G, sealed	886
	Axial spherical plain bearings, maintenance-free, DIN ISO 12240-3	888

Spherical plain bearings, maintenance-free

Radial spherical plain bearings

With lip seals or open

Hard chromium/ELGOGLIDE®-800

GE..-UK-2RS

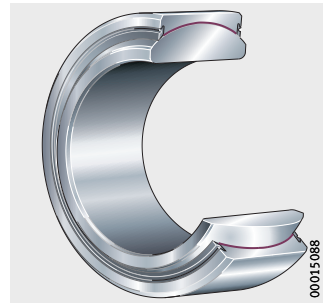

GE..-FW-2RS

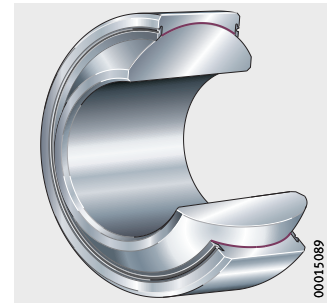

GE..-DW

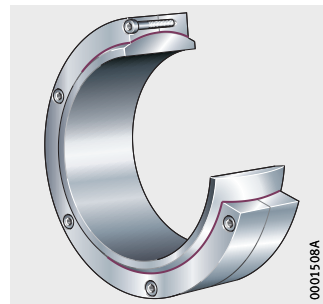

GE..-DW-2RS2

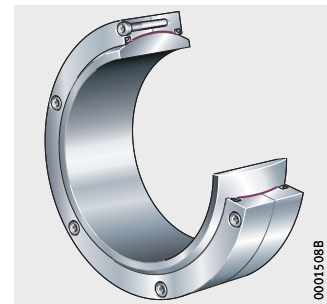

Axial spherical plain bearings

Hard chromium/ELGOGLIDE®-800

GE..-AW

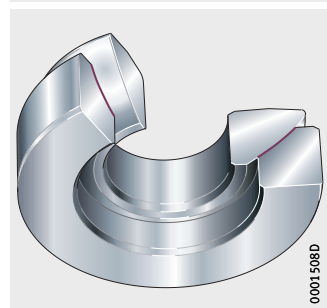

Spherical plain bearings, maintenance-free

Features

Maintenance-free large spherical plain bearings are available as radial and axial bearings.

The bearings are suitable for alternating and unilateral dynamic loads, ratio C_r/P (C_a/P) see page 856.

Spherical plain bearings are maintenance-free for their operating life and must not be lubricated.

Radial spherical plain bearings

Radial spherical plain bearings comprise inner rings and outer rings with a maintenance-free sliding layer. The inner ring has a cylindrical bore and a curved outer slideway. The outer ring has a cylindrical outside surface and a concave inner slideway. The standard sliding layer is ELGOGLIDE®-800. Technical data on ELGOGLIDE® sliding layers: see table.

Radial spherical plain bearings are used:

- where there are particular requirements on bearing life under maintenance-free operation
- under mainly radial loads
- where, for reasons of lubrication, bearings with a metallic sliding contact surface are not suitable, e.g. under unilateral load.

Technical data on ELGOGLIDE® sliding layers

Characteristics		ELGOGLIDE®	
		800	600
Maximum permissible specific contact pressure p	Static	500 N/mm²	500 N/mm²
	Dynamic, constant	300 N/mm²	100 N/mm²
	Dynamic, variable	100 N/mm²	100 N/mm²
Minimum permissible specific contact pressure p	Dynamic	25 N/mm²	1 N/mm²
Sliding velocity v		1 mm/s ≦ v ≦ 296 mm/s	
p · v value		1 N/mm² · mm/s ≦ p · v ≦ 2 200 N/mm² · mm/s	
Temperature t		–50 °C to +150 °C	
Coefficient of friction μ		0,02 to 0,2	

At increased sliding velocities, good heat dissipation is necessary.

For dimensioning, see Catalogue HG 1, Plain Bearings.

Available bore diameters and dimension series: see table.

Bore diameters and dimension series

Radial spherical plain bearing Series	Design to	Dimension series	Bore diameter d mm	
			from	incl.
GE..-UK-2RS	DIN ISO 12 240-1	E	220	300
GE..-FW-2RS	DIN ISO 12 240-1	G	200	280

Spherical plain bearings, maintenance-free

X-life

The series GE..-DW and GE..-DW-2RS2 are of the X-life design. These bearings have even higher performance materials, lower coefficients of friction and lower running-in wear than comparable bearings.

The outer ring is radially split and held together axially by screws and dowel pins.

Available bore diameters and dimension series: see table.

Bore diameters and dimension series

Radial spherical plain bearing Series	Design to	Dimension series	Bore diameter d mm from	 to
GE..-DW	DIN ISO 12 240-1	C	320	1 000
GE..-DW-2RS2				

Sealing

Sealed radial spherical plain bearings are protected against contamination and water spray by lip seals.

Axial spherical plain bearings

Axial spherical plain bearings comprise shaft locating and housing locating washers. The shaft locating washer is supported in the ball socket-shaped sliding zone of the housing locating washer. The housing locating washer has an adhesive bonded layer of ELGOGLIDE®-800.

Axial spherical plain bearings are preferably used to support axial forces. They are suitable as support or base bearings and can be combined with radial spherical plain bearings of dimension series E to DIN ISO 12240-1, see page 880.

Axial large spherical plain bearings are also supplied in X-life quality. For the advantages of X-life, see section Radial spherical plain bearings, page 877.

Available bore diameters: see table.

Bore diameter

Axial spherical plain bearing Series	Design to	Bore diameter d mm from	 to
GE..-AW	DIN ISO 12 240-3	220	360

Operating temperature

The permissible operating temperature is dependent on the sliding contact surface and the sealing arrangement.

If the temperature exceeds the values according to the table, there will be a reduction in the operating life and the effect of the sealing arrangement.

Temperature and rating life

Spherical plain bearing			Temperature		Reduced rating life
	Series	Sliding layer material	°C		°C
			from	to	from
Radial spherical plain bearing	GE..-UK-2RS[1]	ELGOGLIDE®-800	–30	+130	<–20
	GE..-FW-2RS[1]		–30	+130	
	GE..-DW	ELGOGLIDE®-800-X-life	–50	+150	
	GE..-DW-2RS2[1]		–40	+120	
Axial spherical plain bearing	GE..-AW	ELGOGLIDE®-800-X-life	–50	+150	

[1] Open, for temperatures from –50 °C to +150 °C.

Suffixes

Suffixes for available designs: see table.

Available designs

Suffix	Description	Design
2RS	Lip seals on both sides	Standard
2RS2	Lip seals on both sides with increased sealing action	
W1	Inner and outer ring made from corrosion-resistant steel	Special design, available by agreement only
W3	Inner ring made from corrosion-resistant steel	
W7	Inner ring bore lined with ELGOGLIDE®-800, bore diameter smaller than nominal dimension (d_{NEW} = d – 1,08)	
W8	Inner ring bore lined with ELGOGLIDE®-800 (d_{NEW} = d)	
W11	Maintenance-free ELGOGLIDE®-600 sliding layer, for contact pressures between 1 N/mm² and 100 N/mm² and reduced friction	

Spherical plain bearings, maintenance-free

Design and safety guidelines

In predimensioning, the ratio C_r/P or C_a/P must be observed, see page 856. The permissible ratio is decisively dependent on the operating conditions and the required operating life.

The parts of different bearings are not interchangeable with each other.

Support of radial forces

If axial spherical plain bearings are combined with radial spherical plain bearings of dimension series E to DIN ISO 12240-1 in order to support radial forces, the axial and radial load must be distributed over both bearings. The pin in the shaft locating washer must have a radial release of approx. 1 mm or the pin must only be in contact with the large end face of the shaft locating washer, *Figure 1*.

Axial spherical plain bearings must always be mounted in a closed housing. The diameter D of the axial bearing corresponds to the inside diameter of the housing.

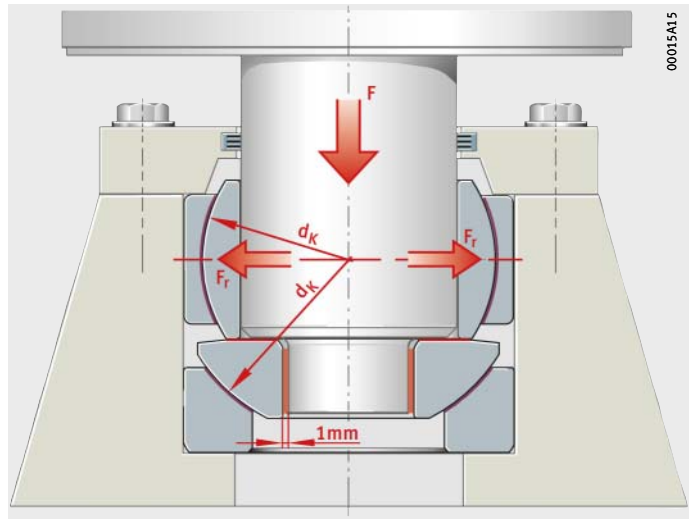

d_K = sphere diameter
F_r = radial dynamic bearing load

Figure 1
Combination of axial and radial spherical plain bearing

Accuracy

The main dimensions correspond to DIN ISO 12 240-1 or 3.

The dimensional and geometrical accuracy of the inside and outside diameter corresponds to DIN ISO 12 240-1 or 3.

Dimensional and tolerance data are arithmetic mean values. Dimensional checking is carried out in accordance with ISO 8 015.

Spherical plain bearings with split outer ring

The outside diameters are within the deviations given in the tables before surface treatment and splitting.

The outer rings become slightly out of round due to splitting. The roundness of the outer ring is restored once it is mounted in a housing bore produced in accordance with the specifications.

Measurements taken of the outside diameter of the unmounted bearing cannot be used as the original actual values for the outside diameter.



Radial spherical plain bearings

Maintenance-free
DIN ISO 12240-1, dimension series E
Sealed

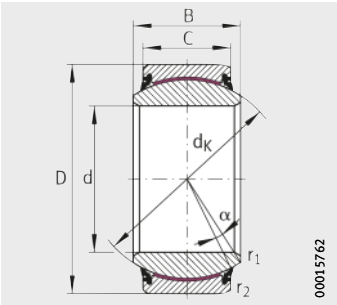

GE..-UK-2RS
Sliding contact surface
hard chromium/ELGOGLIDE®-800

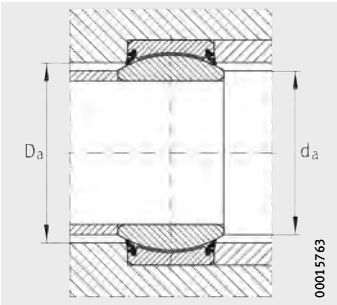

Mounting dimensions

Dimension table · Dimensions in mm

Designation	Mass	Dimensions						
	m	d	D	B	C	d_K	α	r_1, r_2
	≈kg						°	min.
GE220-UK-2RS	35,4	**$220_{-0,03}$**	$320_{-0,04}$	$135_{-0,3}$	$100_{-0,8}$	275	8	1,1
GE240-UK-2RS	39,4	**$240_{-0,03}$**	$340_{-0,04}$	$140_{-0,3}$	$100_{-0,8}$	300	8	1,1
GE260-UK-2RS	51,1	**$260_{-0,035}$**	$370_{-0,04}$	$150_{-0,35}$	$110_{-0,8}$	325	7	1,1
GE280-UK-2RS	64,5	**$280_{-0,035}$**	$400_{-0,04}$	$155_{-0,35}$	$120_{-0,8}$	350	6	1,1
GE300-UK-2RS	77,2	**$300_{-0,035}$**	$430_{-0,045}$	$165_{-0,35}$	$120_{-0,9}$	375	7	1,1

Mounting dimensions		Basic load ratings		Radial internal clearance
d_a max.	D_a min.	dyn. C_r kN	stat. C_{0r} kN	
239,5	267	6 600	11 000	0 – 0,11
265,3	295	7 200	12 000	0 – 0,11
288,3	319	8 550	14 250	0 – 0,125
313,8	342	10 050	16 750	0 – 0,125
336,7	370	10 800	18 000	0 – 0,125

Radial spherical plain bearings

Maintenance-free
DIN ISO 12240-1, dimension series C
Open or sealed

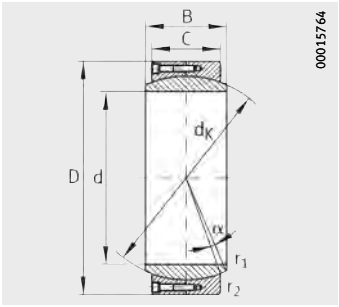

GE..-DW
Sliding contact surface hard chromium/ELGOGLIDE®-800-X-life

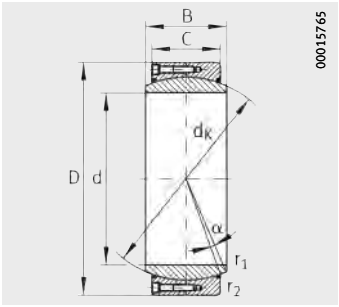

GE..-DW-2RS2
Sliding contact surface hard chromium/ELGOGLIDE®-800-X-life

Dimension table · Dimensions in mm

Designation				Mass m		Dimensions			
Without seals	X-life	With seals	X-life	Without seals ≈kg	With seals ≈kg	d	D	B	C
GE320-DW	**XL**	**GE320-DW-2RS2**	**XL**	77,5	76,6	**320**$_{-0,04}$	440$_{-0,045}$	160$_{-0,4}$	135$_{-0,9}$
GE340-DW	**XL**	**GE340-DW-2RS2**	**XL**	82	81,1	**340**$_{-0,04}$	460$_{-0,045}$	160$_{-0,4}$	135$_{-0,9}$
GE360-DW	**XL**	**GE360-DW-2RS2**	**XL**	86,3	85,3	**360**$_{-0,04}$	480$_{-0,045}$	160$_{-0,4}$	135$_{-0,9}$
GE380-DW	**XL**	**GE380-DW-2RS2**	**XL**	126,9	125,7	**380**$_{-0,04}$	520$_{-0,05}$	190$_{-0,4}$	160$_{-1}$
GE400-DW	**XL**	**GE400-DW-2RS2**	**XL**	133,1	132	**400**$_{-0,04}$	540$_{-0,05}$	190$_{-0,4}$	160$_{-1}$
GE420-DW	**XL**	**GE420-DW-2RS2**	**XL**	139,2	138	**420**$_{-0,045}$	560$_{-0,05}$	190$_{-0,45}$	160$_{-1}$
GE440-DW	**XL**	**GE440-DW-2RS2**	**XL**	194,1	191,7	**440**$_{-0,045}$	600$_{-0,05}$	218$_{-0,45}$	185$_{-1}$
GE460-DW	**XL**	**GE460-DW-2RS2**	**XL**	202,2	199,8	**460**$_{-0,045}$	620$_{-0,05}$	218$_{-0,45}$	185$_{-1}$
GE480-DW	**XL**	**GE480-DW-2RS2**	**XL**	237	234,4	**480**$_{-0,045}$	650$_{-0,075}$	230$_{-0,45}$	195$_{-1,1}$
GE500-DW	**XL**	**GE500-DW-2RS2**	**XL**	246,1	243,5	**500**$_{-0,045}$	670$_{-0,075}$	230$_{-0,45}$	195$_{-1,1}$
GE530-DW	**XL**	**GE530-DW-2RS2**	**XL**	291,2	288,4	**530**$_{-0,05}$	710$_{-0,075}$	243$_{-0,5}$	205$_{-1,1}$
GE560-DW	**XL**	**GE560-DW-2RS2**	**XL**	342	339,1	**560**$_{-0,05}$	750$_{-0,075}$	258$_{-0,5}$	215$_{-1,1}$
GE600-DW	**XL**	**GE600-DW-2RS2**	**XL**	409,7	406,4	**600**$_{-0,05}$	800$_{-0,075}$	272$_{-0,5}$	230$_{-1,1}$
GE630-DW	**XL**	**GE630-DW-2RS2**	**XL**	532,8	529,6	**630**$_{-0,05}$	850$_{-0,1}$	300$_{-0,5}$	260$_{-1,2}$
GE670-DW	**XL**	**GE670-DW-2RS2**	**XL**	598	594,5	**670**$_{-0,075}$	900$_{-0,1}$	308$_{-0,75}$	260$_{-1,2}$
GE710-DW	**XL**	**GE710-DW-2RS2**	**XL**	697,7	693,7	**710**$_{-0,075}$	950$_{-0,1}$	325$_{-0,75}$	275$_{-1,2}$
GE750-DW	**XL**	**GE750-DW-2RS2**	**XL**	785,4	781,1	**750**$_{-0,075}$	1 000$_{-0,1}$	335$_{-0,75}$	280$_{-1,2}$
GE800-DW	**XL**	**GE800-DW-2RS2**	**XL**	926,8	922,3	**800**$_{-0,075}$	1 060$_{-0,125}$	355$_{-0,75}$	300$_{-1,3}$
GE850-DW	**XL**	**GE850-DW-2RS2**	**XL**	1 054,1	1 049,3	**850**$_{-0,1}$	1 120$_{-0,125}$	365$_{-1}$	310$_{-1,3}$
GE900-DW	**XL**	**GE900-DW-2RS2**	**XL**	1 190,2	1 185,1	**900**$_{-0,1}$	1 180$_{-0,125}$	375$_{-1}$	320$_{-1,3}$
GE950-DW	**XL**	**GE950-DW-2RS2**	**XL**	1 435,3	1 430	**950**$_{-0,1}$	1 250$_{-0,125}$	400$_{-1}$	340$_{-1,3}$
GE1000-DW	**XL**	**GE1000-DW-2RS2**	**XL**	1 757,3	1 752,1	**1 000**$_{-0,1}$	1 320$_{-0,16}$	438$_{-1}$	370$_{-1,6}$

Attention!
The screw design is only valid for the basic load rating C.
If the load is greater, the outer ring halves must be supported by lateral clamping covers.

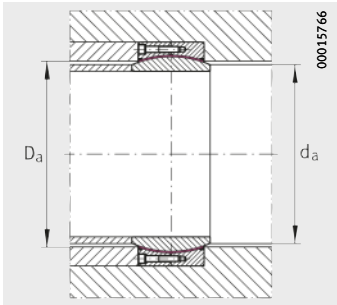

Mounting dimensions

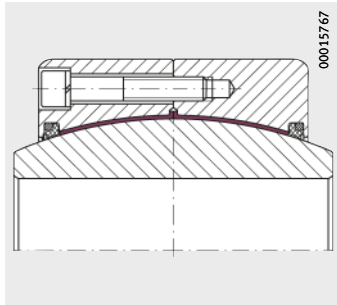

Detail

				Mounting dimensions		Basic load ratings				Radial internal clearance
						Without seals		With seals		
d_K	α	r_1	r_2	d_a	D_a	dyn. C_r	stat. C_{0r}	dyn. C_r	stat. C_{0r}	
	°	min.	min.	max.	min.	kN	kN	kN	kN	
380	4	1,1	3	344,6	361	15 390	25 650	12 920	21 540	0 – 0,125
400	3,8	1,1	3	366,6	382	16 200	27 000	13 600	22 680	0 – 0,125
420	3,6	1,1	3	388,3	403	17 010	28 350	14 280	23 810	0 – 0,135
450	4,1	1,5	4	407,9	426	21 600	36 000	18 680	31 140	0 – 0,135
470	3,9	1,5	4	429,8	447	22 560	37 600	19 510	32 520	0 – 0,135
490	3,7	1,5	4	451,6	469	23 520	39 200	20 340	33 900	0 – 0,135
520	3,9	1,5	4	472	491	28 860	48 100	24 490	40 820	0 – 0,145
540	3,7	1,5	4	494	513	29 970	49 950	25 430	42 390	0 – 0,145
565	3,8	2	5	516	536	33 050	55 080	28 300	47 170	0 – 0,145
585	3,6	2	5	537,8	557	34 220	57 030	29 300	48 840	0 – 0,145
620	3,7	2	5	570,3	591	38 130	63 550	32 920	54 870	0 – 0,145
655	4	2	5	602	624	42 240	70 410	36 740	61 240	0 – 0,16
700	3,6	2	5	644,9	667	48 300	80 500	42 420	70 700	0 – 0,16
740	3,3	3	6	676,4	698	57 720	96 200	51 500	85 840	0 – 0,16
785	3,7	3	6	722	746	61 230	102 050	54 630	91 060	0 – 0,16
830	3,7	3	6	763,7	789	68 470	114 120	60 850	101 420	0 – 0,17
875	3,8	3	6	808,3	834	73 500	122 500	65 460	109 110	0 – 0,17
930	3,6	3	6	859,5	886	83 700	139 500	75 160	125 270	0 – 0,17
985	3,4	3	6	914,8	940	91 600	152 670	82 560	137 600	0 – 0,17
1 040	3,2	3	6	970	995	99 840	166 400	90 290	150 480	0 – 0,195
1 100	3,3	4	7,5	1 024,6	1 052	112 200	187 000	102 100	170 170	0 – 0,195
1 160	3,5	4	7,5	1 074,1	1 105	128 760	214 600	118 110	196 850	0 – 0,195

Radial spherical plain bearings

Maintenance-free
DIN ISO 12240-1, dimension series G
Sealed

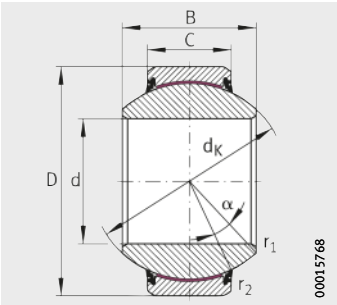

GE..-FW-2RS
Sliding contact surface
hard chromium/ELGOGLIDE®-800

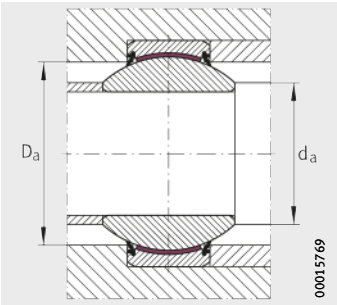

Mounting dimensions

Dimension table · Dimensions in mm

Designation	Mass	Dimensions						
	m	d	D	B	C	d_K	α	r_1, r_2
	≈kg						°	min.
GE200-FW-2RS	44,8	**$200_{-0,03}$**	$320_{-0,04}$	$165_{-0,3}$	$100_{-0,8}$	275	15	1,1
GE220-FW-2RS	50,9	**$220_{-0,03}$**	$340_{-0,04}$	$175_{-0,3}$	$100_{-0,8}$	300	16	1,1
GE240-FW-2RS	65	**$240_{-0,03}$**	$370_{-0,04}$	$190_{-0,35}$	$110_{-0,8}$	325	15	1,1
GE260-FW-2RS	81,7	**$260_{-0,035}$**	$400_{-0,04}$	$205_{-0,35}$	$120_{-0,8}$	350	15	1,1
GE280-FW-2RS	96,6	**$280_{-0,035}$**	$430_{-0,045}$	$210_{-0,35}$	$120_{-0,9}$	375	15	1,1

Mounting dimensions		Basic load ratings		Radial internal clearance
d_a max.	D_a min.	dyn. C_r kN	stat. C_{0r} kN	
220	267	6 600	11 000	0 – 0,11
243,6	295	7 200	12 000	0 – 0,11
263,6	319	8 550	14 250	0 – 0,125
283,6	342	10 050	16 750	0 – 0,125
310,6	370	10 800	18 000	0 – 0,125

Axial spherical plain bearings

Maintenance-free
DIN ISO 12240-3

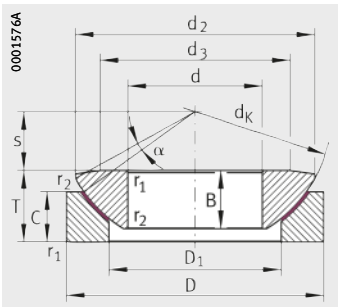

GE..-AW
Sliding contact surface hard chromium/ELGOGLIDE®-800-X-life

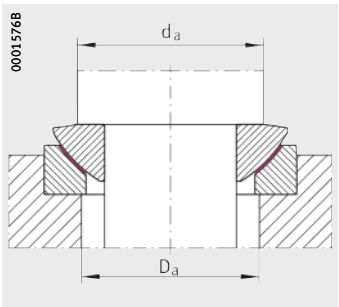

Mounting dimensions

Dimension table · Dimensions in mm

Designation		Mass	Dimensions						
	X-life	m ≈kg	d	D	T	d_K	d_2	d_3	D_1
GE220-AW	**XL**	45,6	**220**$_{-0,03}$	370$_{-0,04}$	97$_{-0,6}$	388	350	289	265
GE240-AW	**XL**	57	**240**$_{-0,03}$	400$_{-0,04}$	103$_{-0,6}$	420	382	314	294
GE260-AW	**XL**	71,3	**260**$_{-0,035}$	430$_{-0,045}$	115$_{-0,7}$	449	409	336	317
GE280-AW	**XL**	84,1	**280**$_{-0,035}$	460$_{-0,045}$	110$_{-0,7}$	480	445	366	337
GE300-AW	**XL**	88,6	**300**$_{-0,035}$	480$_{-0,045}$	110$_{-0,7}$	490	460	388	356
GE320-AW	**XL**	111,5	**320**$_{-0,04}$	520$_{-0,05}$	116$_{-0,8}$	540	500	405	380
GE340-AW	**XL**	117	**340**$_{-0,04}$	540$_{-0,05}$	116$_{-0,8}$	550	510	432	380
GE360-AW	**XL**	132,3	**360**$_{-0,04}$	560$_{-0,05}$	125$_{-0,8}$	575	535	452	400

						Mounting dimensions		Basic load ratings	
B	C	s	α	r_1	r_2	d_a	D_a	dyn. C_a	stat. C_{0a}
			°	min.	min.	max.	min.	kN	kN
$82_{-0,6}$	$67_{-0,6}$	75	7	1,5	0,6	289	279	8 530	14 220
$87_{-0,6}$	$73_{-0,6}$	77,5	6	1,5	0,6	314	309	10 300	17 170
$95_{-0,7}$	$80_{-0,7}$	82,5	7	1,5	0,6	336	332	10 810	18 010
$100_{-0,7}$	$85_{-0,7}$	80	4	3	1	366	355	17 130	28 560
$100_{-0,7}$	$90_{-0,7}$	80	3,5	3	1	388	375	17 280	28 800
$105_{-0,8}$	$91_{-0,8}$	95	4	4	1,1	405	402	21 110	35 180
$105_{-0,8}$	$91_{-0,8}$	95	4	4	1,1	432	402	23 670	39 460
$115_{-0,8}$	$95_{-0,8}$	95	4	4	1,1	452	422	25 470	42 460

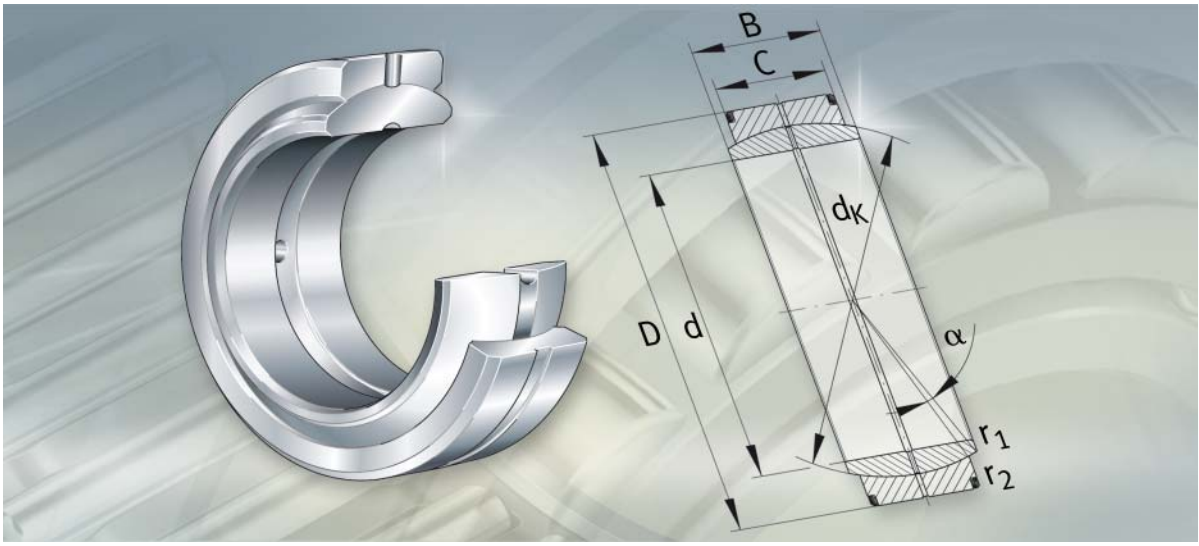

Spherical plain bearings, requiring maintenance

Radial spherical plain bearings

Spherical plain bearings, requiring maintenance

		Page
Product overview	Spherical plain bearings, requiring maintenance	892
Features	Radial spherical plain bearings	893
	Sealing	893
	Lubrication	893
	Operating temperature	894
	Suffixes	894
Design and safety guidelines		895
Accuracy	Spherical plain bearings with split outer ring	895
Dimension tables	Radial spherical plain bearings, requiring maintenance, DIN ISO 12240-1-, dimension series E, sealed	896
	Radial spherical plain bearings, requiring maintenance, DIN ISO 12240-1, dimension series C, open	898
	Radial spherical plain bearings, requiring maintenance, DIN ISO 12240-1, dimension series G, sealed	900



Spherical plain bearings, requiring maintenance

Radial spherical plain bearings

With lip seals or open

Steel/steel

GE..-DO-2RS

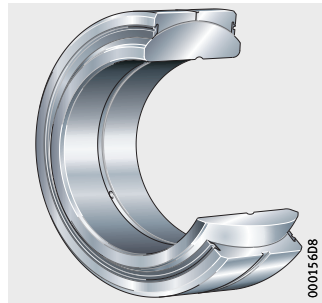

GE..-DO

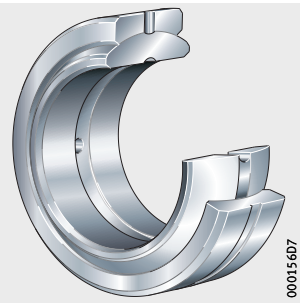

GE..-FO-2RS

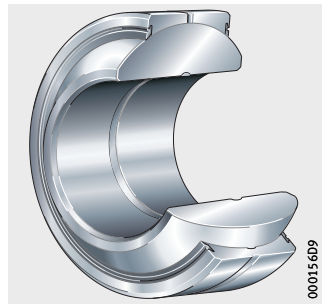

Spherical plain bearings, requiring maintenance

Features

Large spherical plain bearings requiring maintenance are available as radial bearings.

The bearings are suitable for alternating and unilateral dynamic loads, ratio C_r/P see page 856.

Radial spherical plain bearings

The bearings comprise inner and outer rings with a steel/steel sliding contact surface. Technical data on the sliding contact surface: see table. The inner ring has a cylindrical bore and a curved outer slideway. The outer ring has a cylindrical outside surface and a concave inner slideway.

They can support radial forces, transmit motion and loads with low moment levels and thus keep bending stresses away from the construction elements. The bearings are particularly suitable for alternating loads with impact and shock type stresses and support axial loads in both directions.

Technical data

Characteristics	Load	
Specific load parameters K and K_0	Dynamic, alternating	100 N/mm²
	Dynamic, unilateral	60 N/mm²
	Static	500 N/mm²
Contact pressure p	Alternating	1 N/mm² ≦ p ≦ 100 N/mm²
	Unilateral	1 N/mm² ≦ p ≦ 60 N/mm²
Sliding velocity v		1 mm/s ≦ v ≦ 100 mm/s
p · v value		1 N/mm² · mm/s ≦ p · v ≦ 400 N/mm² · mm/s
Ratio C/P	Alternating	3 to 1
	Unilateral	4 to 1,7
Friction factor μ		0,08 ≦ μ ≦ 0,22

Available bore diameters and dimension series: see table.

Bore diameters and dimension series

Radial spherical plain bearing Series	Design to	Dimension series	Bore diameter d mm	
			from	to
GE..-DO-2RS	DIN ISO 12 240-1	E	220	300
GE..-DO	DIN ISO 12 240-1	C	320	1 000
GE..-FO-2RS	DIN ISO 12 240-1	G	200	280

Sealing

Sealed radial spherical plain bearings are protected against contamination and water spray by lip seals.

Lubrication

The bearings are lubricated via the outer and inner ring.

The relubrication intervals must be observed.

Spherical plain bearings, requiring maintenance

Operating temperature

The permissible operating temperature is dependent on the sliding contact surface and the sealing arrangement.



If the temperature exceeds the values according to the table, there will be a reduction in the operating life and the effect of the sealing arrangement.

Temperature and rating life

Radial spherical plain bearing	Temperature °C		Reduced rating life °C
Series	from	to	from
GE..-DO	–60	+200	+150
GE..-DO-2RS[1)]	–30	+130	–
GE..-FO-2RS[1)]	–30	+130	–

[1)] Open, for temperatures from –60 °C to +200 °C.

Suffixes

Suffixes for available designs: see table.

Available designs

Suffix	Description	Design
2RS	Lip seals on both sides	Standard

Design and safety guidelines

In predimensioning, the ratio C_r/P must be observed, see page 856. The permissible ratio is decisively dependent on the operating conditions and the required operating life.

The parts of different bearings are not interchangeable with each other.

For the support of radial forces, see page 880.

Accuracy

The main dimensions correspond to DIN ISO 12 240-1.

The dimensional and geometrical accuracy of the inside and outside diameter corresponds to DIN ISO 12 240-1.

Dimensional and tolerance data are arithmetic mean values. Dimensional checking is carried out in accordance with ISO 8 015.

Spherical plain bearings with split outer ring

The outside diameters are within the deviations given in the tables before surface treatment and splitting.

The outer rings become slightly out of round due to splitting. The roundness of the outer ring is restored once it is mounted in a housing bore produced in accordance with the specifications.

Measurements taken of the outside diameter of the unmounted bearing cannot be used as the original actual values for the outside diameter.



Radial spherical plain bearings

Requiring maintenance
DIN ISO 12240-1, dimension series E
Sealed

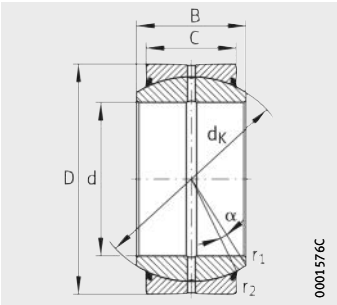

GE..-DO-2RS
Sliding contact surface steel/steel

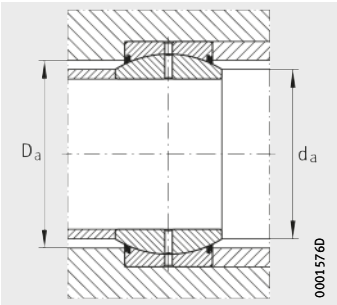

Mounting dimensions

Dimension table · Dimensions in mm

Designation	Mass	Dimensions						
	m	d	D	B	C	d_K	α	r_1, r_2
	≈kg						°	min.
GE220-DO-2RS	35,5	**$220_{-0,03}$**	$320_{-0,04}$	$135_{-0,3}$	$100_{-0,8}$	275	8	1,1
GE240-DO-2RS	39,5	**$240_{-0,03}$**	$340_{-0,04}$	$140_{-0,3}$	$100_{-0,8}$	300	8	1,1
GE260-DO-2RS	51,2	**$260_{-0,035}$**	$370_{-0,04}$	$150_{-0,35}$	$110_{-0,8}$	325	7	1,1
GE280-DO-2RS	64,8	**$280_{-0,035}$**	$400_{-0,04}$	$155_{-0,35}$	$120_{-0,8}$	350	6	1,1
GE300-DO-2RS	77,5	**$300_{-0,035}$**	$430_{-0,045}$	$165_{-0,35}$	$120_{-0,9}$	375	7	1,1

Mounting dimensions		Basic load ratings		Radial internal clearance
d_a	D_a	dyn. C_r	stat. C_{0r}	CN
max.	min.	kN	kN	
239,5	267	2 320	11 600	0,11 – 0,214
265,3	295	2 550	12 700	0,11 – 0,214
288,3	319	3 050	15 300	0,125 – 0,239
313,8	342	3 550	18 000	0,125 – 0,239
336,7	370	3 800	19 000	0,125 – 0,239

Radial spherical plain bearings

Requiring maintenance
DIN ISO 12240-1, dimension series C
Open

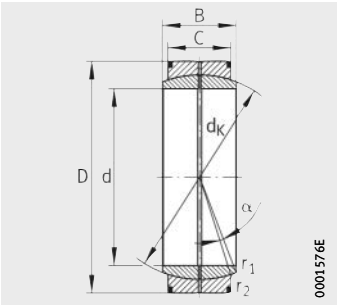

GE..-DO
Sliding contact surface steel/steel

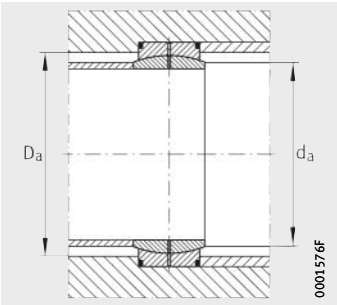

Mounting dimensions

Dimension table · Dimensions in mm

Designation	Mass	Dimensions					
	m	d	D	B	C	d_K	α
	≈kg						°
GE320-DO	77,2	**320$_{-0,04}$**	440$_{-0,045}$	160$_{-0,4}$	135$_{-0,9}$	380	4
GE340-DO	81,4	**340$_{-0,04}$**	460$_{-0,045}$	160$_{-0,4}$	135$_{-0,9}$	400	3,8
GE360-DO	85,8	**360$_{-0,04}$**	480$_{-0,045}$	160$_{-0,4}$	135$_{-0,9}$	420	3,6
GE380-DO	126,7	**380$_{-0,04}$**	520$_{-0,05}$	190$_{-0,4}$	160$_{-1}$	450	4,1
GE400-DO	132,9	**400$_{-0,04}$**	540$_{-0,05}$	190$_{-0,4}$	160$_{-1}$	470	3,9
GE420-DO	138,6	**420$_{-0,045}$**	560$_{-0,05}$	190$_{-0,45}$	160$_{-1}$	490	3,7
GE440-DO	193	**440$_{-0,045}$**	600$_{-0,05}$	218$_{-0,45}$	185$_{-1}$	520	3,9
GE460-DO	200,9	**460$_{-0,045}$**	620$_{-0,05}$	218$_{-0,45}$	185$_{-1}$	540	3,7
GE480-DO	235,6	**480$_{-0,045}$**	650$_{-0,075}$	230$_{-0,45}$	195$_{-1,1}$	565	3,8
GE500-DO	244,3	**500$_{-0,045}$**	670$_{-0,075}$	230$_{-0,45}$	195$_{-1,1}$	585	3,6
GE530-DO	289,4	**530$_{-0,05}$**	710$_{-0,075}$	243$_{-0,5}$	205$_{-1,1}$	620	3,7
GE560-DO	339,8	**560$_{-0,05}$**	750$_{-0,075}$	258$_{-0,5}$	215$_{-1,1}$	655	4
GE600-DO	407,2	**600$_{-0,05}$**	800$_{-0,075}$	272$_{-0,5}$	230$_{-1,1}$	700	3,6
GE630-DO	530,2	**630$_{-0,05}$**	850$_{-0,1}$	300$_{-0,5}$	260$_{-1,2}$	740	3,3
GE670-DO	594,4	**670$_{-0,075}$**	900$_{-0,1}$	308$_{-0,75}$	260$_{-1,2}$	785	3,7
GE710-DO	693	**710$_{-0,075}$**	950$_{-0,1}$	325$_{-0,75}$	275$_{-1,2}$	830	3,7
GE750-DO	779,2	**750$_{-0,075}$**	1 000$_{-0,1}$	335$_{-0,75}$	280$_{-1,2}$	875	3,8
GE800-DO	920	**800$_{-0,075}$**	1 060$_{-0,125}$	355$_{-0,75}$	300$_{-1,3}$	930	3,6
GE850-DO	1 047	**850$_{-0,1}$**	1 120$_{-0,125}$	365$_{-1}$	310$_{-1,3}$	985	3,4
GE900-DO	1 184,2	**900$_{-0,1}$**	1 180$_{-0,125}$	375$_{-1}$	320$_{-1,3}$	1 040	3,2
GE950-DO	1 421,8	**950$_{-0,1}$**	1 250$_{-0,125}$	400$_{-1}$	340$_{-1,3}$	1 100	3,3
GE1000-DO	1 743,6	**1 000$_{-0,1}$**	1 320$_{-0,16}$	438$_{-1}$	370$_{-1,6}$	1 160	3,5

1) $\overline{D_{a\,max} = D_{a\,min} + 20\ mm}$

		Mounting dimensions		Basic load ratings		Radial internal clearance
r_1	r_2	d_a	D_a[1)]	dyn. C_r	stat. C_{0r}	CN
min.	min.	max.	min.	kN	kN	
1,1	3	344,6	361	4 400	22 000	0,125 – 0,239
1,1	3	366,6	382	4 650	23 200	0,125 – 0,239
1,1	3	388,3	403	4 800	24 000	0,135 – 0,261
1,5	4	407,9	426	6 300	31 500	0,135 – 0,261
1,5	4	429,8	447	6 550	32 500	0,135 – 0,261
1,5	4	451,6	469	6 800	34 500	0,135 – 0,261
1,5	4	472	491	8 650	42 300	0,145 – 0,285
1,5	4	494	513	9 000	45 000	0,145 – 0,285
2	5	516	536	9 800	49 000	0,145 – 0,285
2	5	537,8	557	10 200	51 000	0,145 – 0,285
2	5	570,3	591	11 400	57 000	0,145 – 0,285
2	5	602	624	12 700	64 000	0,16 – 0,32
2	5	644,9	667	14 600	73 500	0,16 – 0,32
3	6	676,4	698	17 600	88 000	0,16 – 0,32
3	6	722	746	19 000	95 000	0,16 – 0,32
3	6	763,7	789	21 200	106 000	0,17 – 0,35
3	6	808,3	834	22 800	114 000	0,17 – 0,35
3	6	859,5	886	26 000	129 000	0,17 – 0,35
3	6	914,8	940	28 500	143 000	0,17 – 0,35
3	6	970	995	31 000	156 000	0,195 – 0,405
4	7,5	1 024,6	1 052	35 500	176 000	0,195 – 0,405
4	7,5	1 074,1	1 105	40 500	204 000	0,195 – 0,405

Radial spherical plain bearings

Requiring maintenance
DIN ISO 12240-1,
dimension series G
Sealed

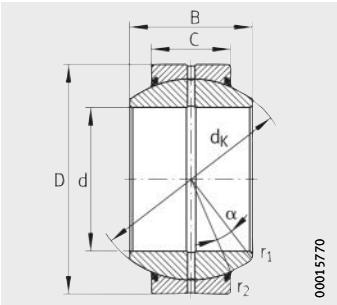

GE..-FO-2RS
Sliding contact surface
steel/steel

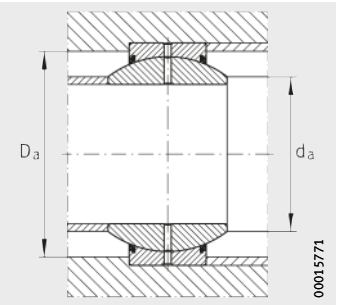

Mounting dimensions

Dimension table · Dimensions in mm

Designation	Mass	Dimensions						
	m	d	D	B	C	d_K	α	r_1, r_2
	≈kg						°	min.
GE200-FO-2RS	44,8	**$200_{-0,03}$**	$320_{-0,04}$	$165_{-0,3}$	$100_{-0,8}$	275	15	1,1
GE220-FO-2RS	50,9	**$220_{-0,03}$**	$340_{-0,04}$	$175_{-0,3}$	$100_{-0,8}$	300	16	1,1
GE240-FO-2RS	64,9	**$240_{-0,03}$**	$370_{-0,04}$	$190_{-0,35}$	$110_{-0,8}$	325	15	1,1
GE260-FO-2RS	81,7	**$260_{-0,035}$**	$400_{-0,04}$	$205_{-0,35}$	$120_{-0,8}$	350	15	1,1
GE280-FO-2RS	96,5	**$280_{-0,035}$**	$430_{-0,045}$	$210_{-0,35}$	$120_{-0,9}$	375	15	1,1

Mounting dimensions		Basic load ratings		Radial internal clearance
d_a	D_a	dyn. C_r	stat. C_{0r}	CN
max.	min.	kN	kN	
220	267	2 320	11 600	0,11 – 0,214
243,6	295	2 550	12 700	0,11 – 0,214
263,6	319	3 050	15 300	0,125 – 0,239
283,6	342	3 550	18 000	0,125 – 0,239
310,6	370	3 800	19 000	0,125 – 0,239

FAG

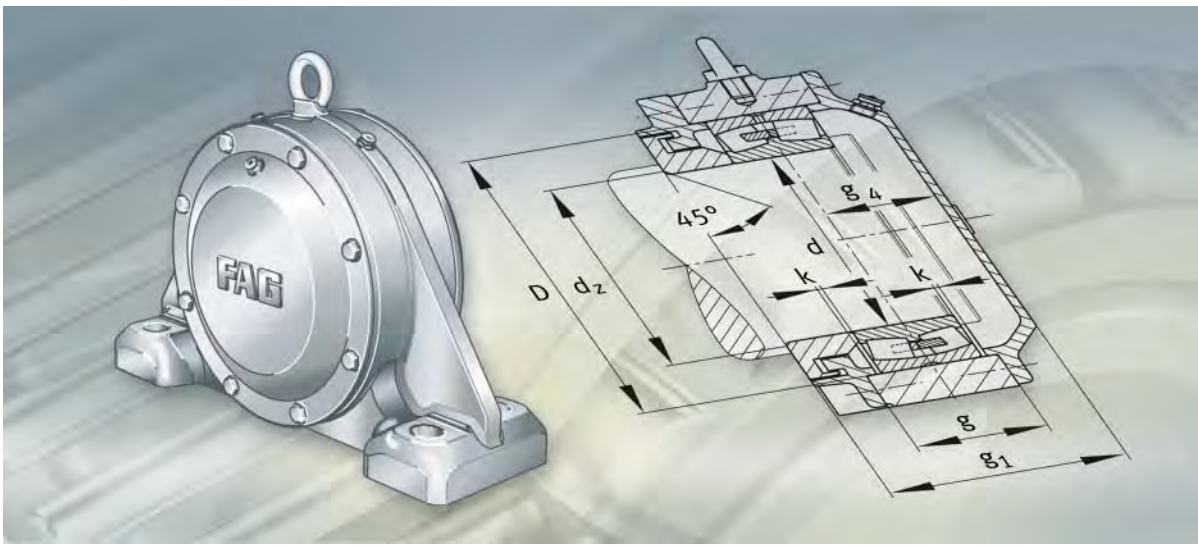

Bearing housings

Bearing housings

		Page
Product overview	Bearing housings	905
Features	Housing materials and outer surfaces	908
	Locating and non-locating bearings	908
	Sealing	908
Split and unsplit plummer block housings	Split plummer block housings KPG, KPGZ	910
	Split plummer block housings LOE, LOU	913
	Split plummer block housings PM	917
	Split plummer block housings RA	919
	Split plummer block housings RLE	921
	Split plummer block housings S30	923
	Split plummer block housings SD5	925
	Split plummer block housings SD31	927
	Unsplit plummer block housings BND	930
	Unsplit plummer block housings BNM	937
Take-up housings	Unsplit take-up housings SPA	939
Design and safety guidelines	Load carrying capacity of split plummer block housings	942
	Load carrying capacity of unsplit plummer block housings	945
	Tightening torques	947



Bearing housings

Page

Dimension tables

Plummer block housings, KPG, split,
for spherical roller bearings
with tapered bore and sleeve,
for split spherical roller bearings 948

Plummer block housings, KPGZ, split,
for spherical roller bearings
with cylindrical bore, for split spherical roller bearings 952

Plummer block housings, LOE, split,
for spherical roller bearings
with cylindrical bore, oil lubrication 956

Plummer block housings, LOE, split,
for spherical roller bearings
with tapered bore and adapter sleeve, oil lubrication 958

Plummer block housings, LOU, split,
for spherical roller bearings
with cylindrical bore, recirculating oil lubrication 960

Plummer block housings, LOU, split,
for spherical roller bearings
with tapered bore and adapter sleeve,
recirculating oil lubrication 962

Plummer block housings, PM30, split,
for spherical roller bearings
with tapered bore and adapter sleeve,
for direct bearing seat 964

Plummer block housings, RA, split,
for spherical roller bearings
with cylindrical bore,
with tapered bore and withdrawal sleeve 966

Plummer block housings, RLE, split,
for spherical roller bearings
with cylindrical bore,
with tapered bore and withdrawal sleeve 968

Plummer block housings, S30, split,
for spherical roller bearings
with tapered bore and adapter sleeve 970

Plummer block housings, SD5, split,
for spherical roller bearings
with tapered bore and adapter sleeve 974

Plummer block housings, SD31, split,
for spherical roller bearings
with tapered bore and adapter sleeve 978

Plummer block housings, BND, unsplit,
for spherical roller bearings
with cylindrical bore,
with tapered bore and adapter sleeve 982

Plummer block housings, BNM, unsplit,
for spherical roller bearings
with tapered bore and withdrawal sleeve 988

Plummer block housings, SPA, unsplit,
for spherical roller bearings
with tapered bore and adapter sleeve 990

Plummer block housings
Split

KPG, KPGZ

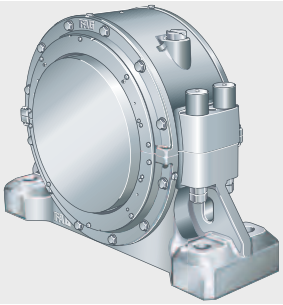

LOE, LOU

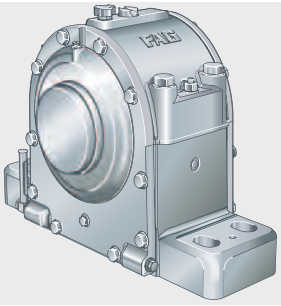

PM

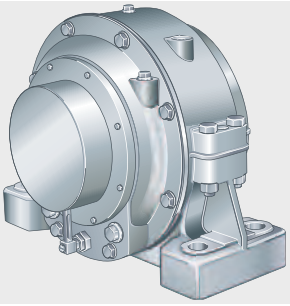

RA

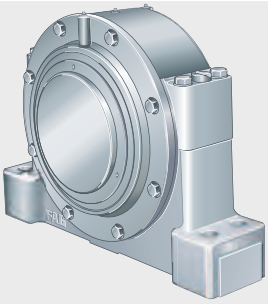

Plummer block housings

Split

RLE

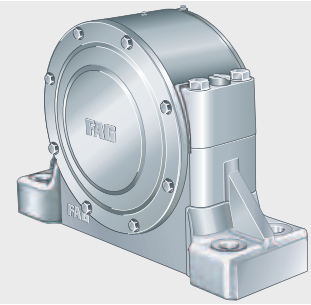

00015351

S30

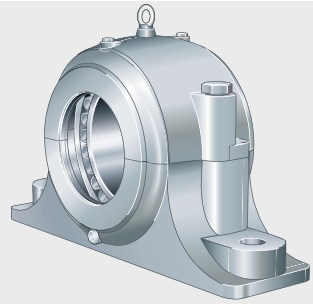

00015369

SD5

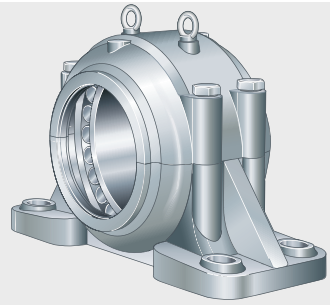

00015393

SD31

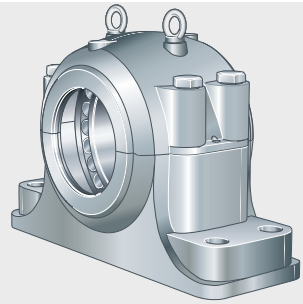

00015300

Plummer block housings

Unsplit

BND, BNM

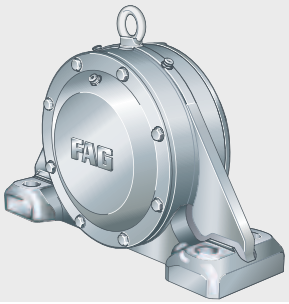

00015540

Take-up housings

SPA

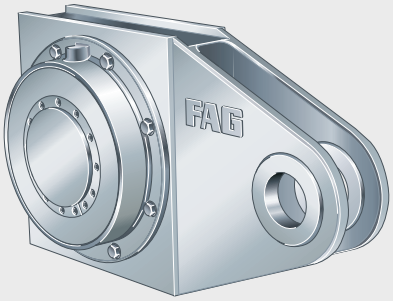

000153C4

Bearing housings

Features

FAG housings and the associated bearings form bearing units that have proven successful in machinery, plant and equipment. It is only possible, however, to show here a small selection of the numerous sizes and designs (for an overview of the FAG series housings, see TI WL 90-30). If other housings or housing designs are required, please contact us.

Housing materials and outer surfaces

The normal material for the housings, depending on the series, is flake graphite cast iron, cast steel or spheroidal graphite cast iron.

If a material other than the normal material is possible, a suffix must be used to indicate the material, i.e.:

- L for flake graphite cast iron (GG)
- S for cast steel (GS)
- D for spheroidal graphite cast iron (GGG).

Since the bearings are generally lubricated with grease and the initial grease filling lasts for a long period, most housings do not have relubrication holes. However, there are cast-on bosses or marks present so that lubrication holes can be made if necessary. If relubrication is carried out, it must be ensured that excess grease is allowed to escape.

All outer surfaces of the housings and housing parts not machined by chip-forming methods have a universal paint coating (colour RAL 7031, bluish grey). The coating can be finished using all synthetic resin, polyurethane, acrylic, epoxy resin, chlorinated rubber, nitrocellulose and acid-hardening hammer tone finishes. The anti-corrosion protection on the inner and outer surfaces machined by chip-forming methods can be easily removed.

Locating and non-locating bearings

The bearing seats in the housing are generally machined such that the bearings are movable and can thus function as non-locating bearings. Locating bearing arrangements can be achieved by the insertion of locating rings if these are listed in the tables. Locating rings must be ordered separately.
Housings without locating rings are supplied in a non-locating or locating bearing design.

Sealing

For sealing of bearing housings according to the operating conditions, contact seals, non-contact seals and combinations of these are available, *Figure 1* to *Figure 3*, page 909.

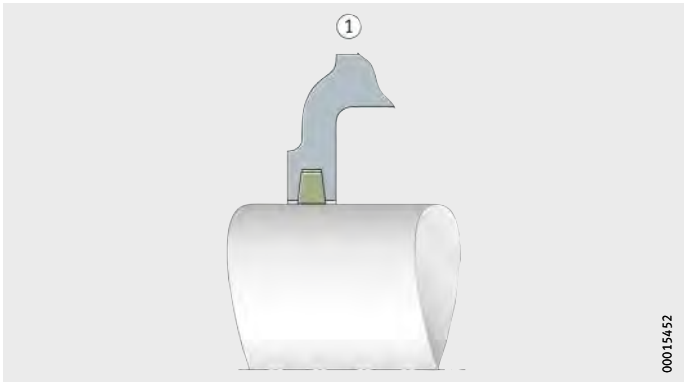

① Felt seal

Figure 1
Example of contact seals

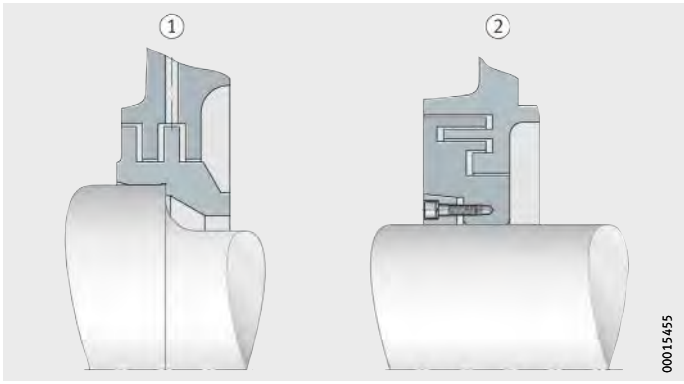

① Radial labyrinth
② Axial labyrinth

Figure 2
Examples of non-contact seals

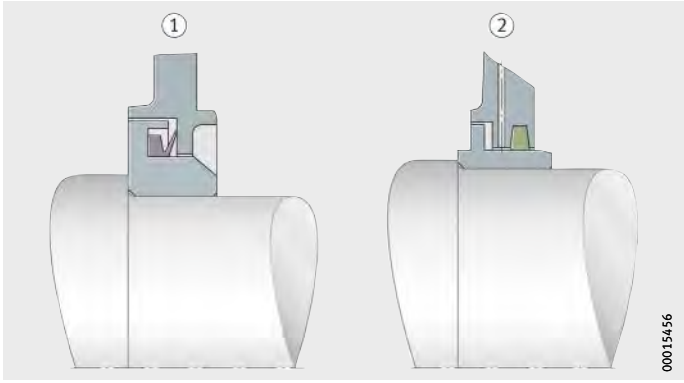

① Labyrinth and V ring
② Labyrinth and felt seal

Figure 3
Examples of combined seals

Bearing housings

Split and unsplit plummer block housings

Large split and unsplit plummer block housings are generally intended for bearing arrangements with spherical roller bearings.

In split plummer block housings, the removable upper section of the housing is centred on the lower section by dowel pins, allowing easier mounting and maintenance. The upper sections must not be interchanged with each other.

In the case of split housings, the tolerance data for bearing seats are only valid for the delivered condition, i. e. before the screws connecting the upper and lower sections are loosened.

Split plummer block housings KPG, KPGZ

Split plummer block housings KPG and KPGZ were developed specifically for trunnion bearing arrangements on converters.

Description of plummer block housings KPG and KPGZ:
see also TPI 148, Rolling Bearing Arrangements for Converters.

Dimensions, material

The housings are matched to the main dimensions of series 249.

The normal material for the housing body is cast steel (suffix S). Housings made from spheroidal graphite cast iron (suffix D) are available by agreement.

Bearing seat and fitting of bearings

The housings KPG, *Figure 4*, page 911, are intended for spherical roller bearings with a tapered bore and sleeve, while the housings KPGZ, *Figure 5*, page 912, are intended for spherical roller bearings with a cylindrical bore.

The locating bearing on the drive side provides axial guidance of the converter.

The locating bearing design F of the housings KPG and KPGZ is originally designed for the fitting of unsplit spherical roller bearings. The locating bearing is formed by fitting locating rings on both sides of the bearing, *Figure 4* ①, page 911 and *Figure 5* ①, page 912.

A housing of design F can also accommodate a split spherical roller bearing, replacing an unsplit bearing, *Figure 4* ②, page 911 and *Figure 5* ②, page 912. As a result, the bearing can be replaced without dismounting the drive.

The non-locating bearing design L is fitted with unsplit bearings. The bearing outer ring can be displaced axially in a bearing bush.

Seals and covers

The covers on both sides of the housings accommodate high-pressure packing as seals, *Figure 6* ①, page 912. Profiled rubber seals are available by agreement, *Figure 6* ②, page 912.

Lubrication

The housings KPG and KPGZ are designed for grease lubrication. Lithium soap greases with effective EP and anti-corrosion additives should be used that preferably also contain an MoS_2 additive.

The housing cavities are filled to 60%, the bearings are completely filled. The grease quantities for the initial filling of the housings are given in the housing tables.

Relubrication should be carried out using the same grease as for the initial lubrication. The bearings are relubricated every three months with approx. 8% of the initial filling quantity.

The lubricant used for the bearings should also be used to relubricate the seals.

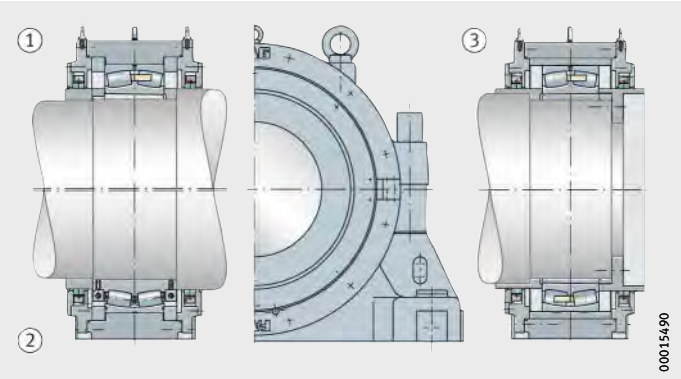

① Locating bearing F
② Locating bearing F with split bearing
③ Non-locating bearing L

Figure 4
Housing KPG for bearings with tapered bore and sleeve

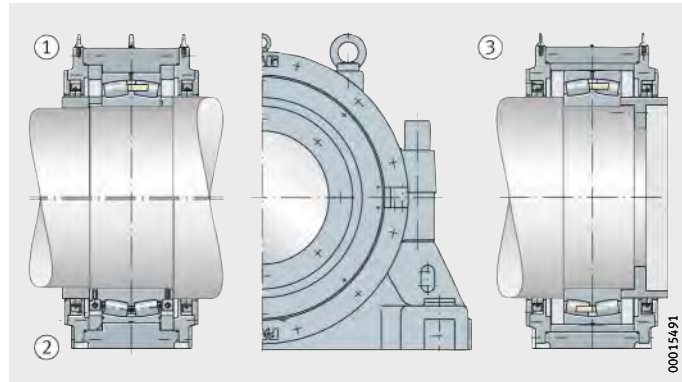

① Locating bearing F
② Locating bearing F with split bearing
③ Non-locating bearing L

Figure 5
Housing KPGZ for bearings with cylindrical bore

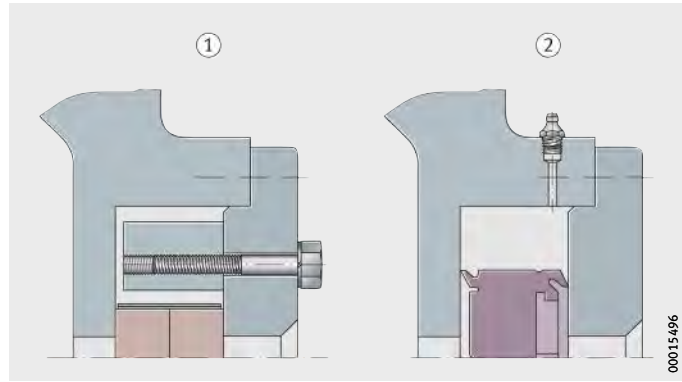

① High-pressure packing
② Profiled rubber seal

Figure 6
Seals for housings KPG and KPGZ

Split plummer block housings LOE, LOU for oil lubrication

Split plummer block housings LOE and LOU are designed for oil lubrication.

Plummer block housings LOE2, LOE3, LOU2 und LOU3 are fitted with spherical roller bearings of series 222 and 223 with a cylindrical bore, *Figure 7* to *Figure 10*, page 914.

The bearings are located on the shaft using an interference fit and axially secured by means of a locknut.

Housings of design A are closed on one side.
Housings of design B are intended for continuous shafts.

The housing is split, the labyrinth covers are unsplit.

The seal comprises two labyrinth rings.

Labyrinth seals allow shaft misalignment of up to 0,25° in both directions. The grease chamber in the cover labyrinth can be relubricated. The housing base has four extended slots.

The eye bolt in the upper section of the housing must not be subjected to a load greater than the mass of the housing including the bearing.

The normal material for the housing body is flake graphite cast iron (suffix L). If required, housings are also available made from cast steel (suffix S) or spheroidal graphite cast iron (suffix D).

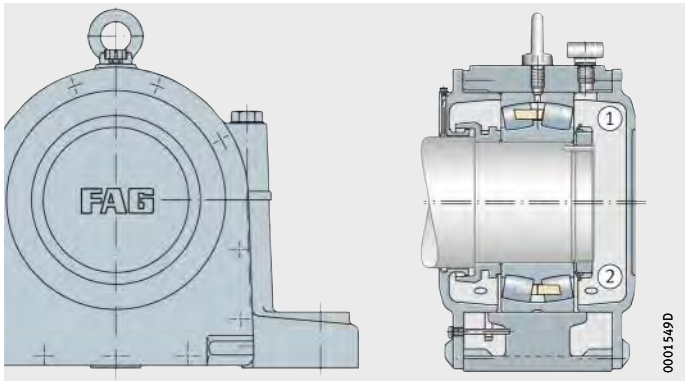

① Locating bearing (AF)
② Non-locating bearing (AL)

Figure 7
Plummer block housings LOE2, LOE3, design A

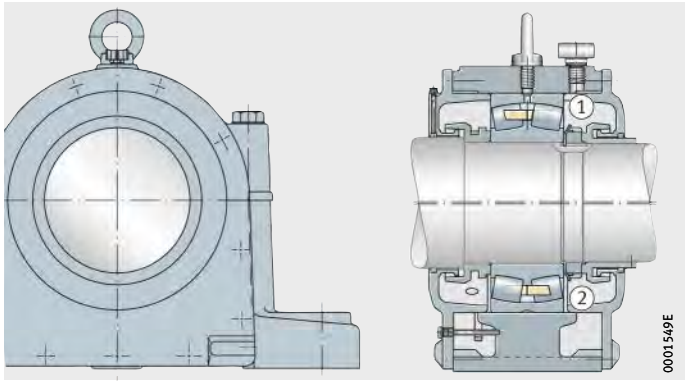

① Locating bearing (BF)
② Non-locating bearing (BL)

Figure 8
Plummer block housings LOE2, LOE3, design B

Bearing housings

Plummer block housings of series LOE and LOU are suitable for high speed bearing arrangements and are designed for oil lubrication.

In the case of housings LOE, *Figure 7* and *Figure 8*, page 913 as well as *Figure 11* and *Figure 12*, page 915, the oil is supplied from the oil sump in the lower section of the housing to the rolling bearing by means of a ring oiler. An angled oil level indicator is screwed to one cover.

Housings of series LOU for recirculating oil lubrication, *Figure 9* and *Figure 10* as well as *Figure 13* and *Figure 14*, page 916, have an oil inlet connector in the upper section and an oil outlet connector in the lower section.

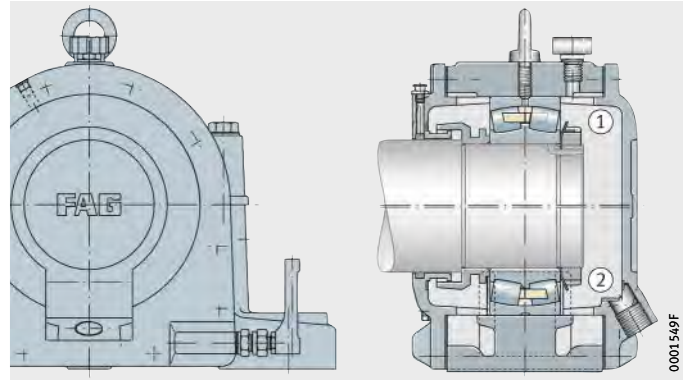

① Locating bearing (AF)
② Non-locating bearing (AL)

Figure 9
Plummer block housings LOU2, LOU3, design A

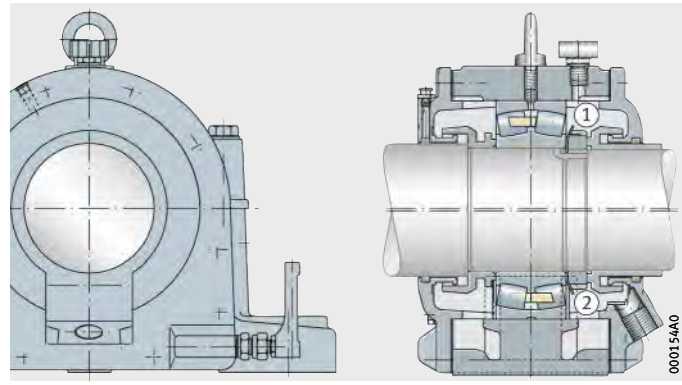

① Locating bearing (BF)
② Non-locating bearing (BL)

Figure 10
Plummer block housings LOU2, LOU3, design B

Plummer block housings LOE5 and LOE6 as well as LOU5 and LOU6 are intended for the fitting of spherical roller bearings with a tapered bore and location by means of adapter sleeves, *Figure 11* to *Figure 14*, page 916.

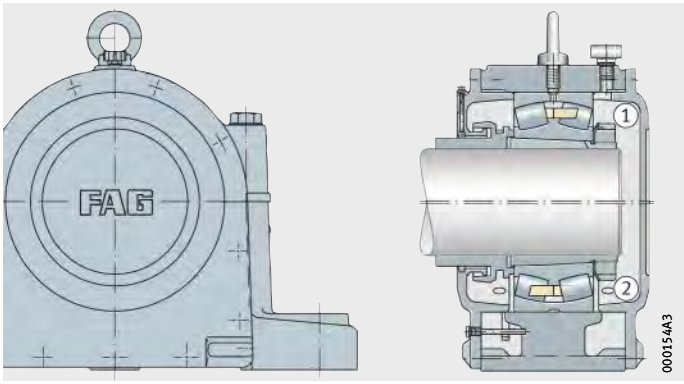

① Locating bearing (AF)
② Non-locating bearing (AL)

Figure 11
Plummer block housings
LOE5, LOE6, design A

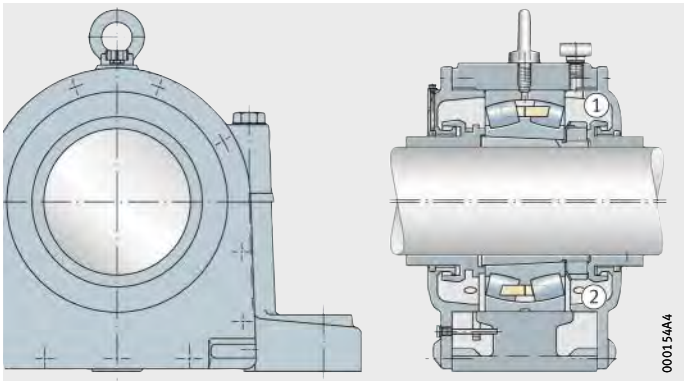

① Locating bearing (BF)
② Non-locating bearing (BL)

Figure 12
Plummer block housings
LOE5, LOE6, design B

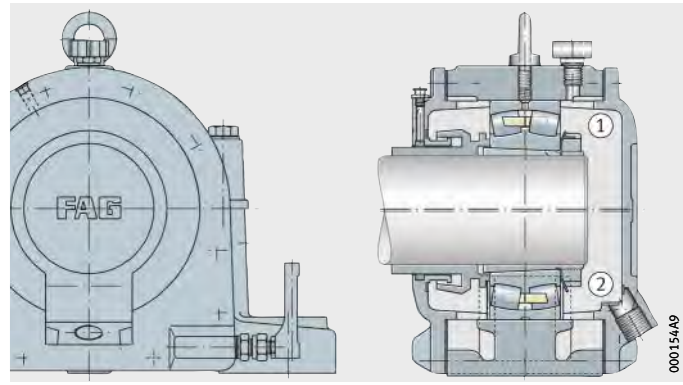

① Locating bearing (AF)
② Non-locating bearing (AL)

Figure 13
Plummer block housings
LOU5, LOU6, design A

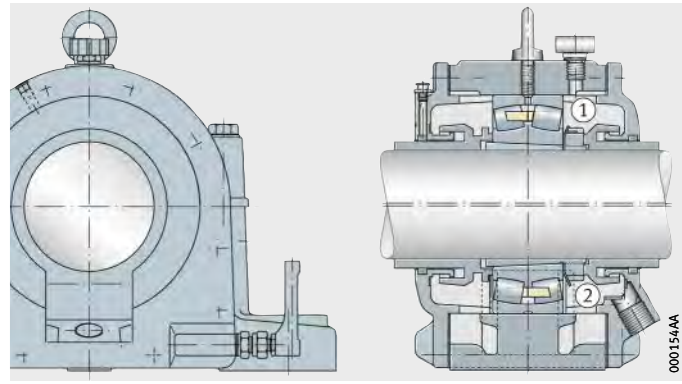

① Locating bearing (BF)
② Non-locating bearing (BL)

Figure 14
Plummer block housings
LOU5, LOU6, design B

Split plummer block housings PM

Split plummer block housings of series PM30 were developed for the bearing arrangements of drying rolls and M.G. cylinders in paper machinery, but are also suitable for other applications.

The housings are fitted with spherical roller bearings of series 230..-K.

The shaft openings in the housings differ in design depending on whether the bearings are located using adapter sleeves (PM30..-H), *Figure 15* and *Figure 16*, or whether they are seated directly on the tapered shaft (PM30..-K), *Figure 17* and *Figure 18*, page 918.

Housings for bearings with withdrawal sleeves (PM30..-AH) are available by agreement.

Locating bearing designs are available for shaft ends (AF) and for continuous shafts (BF).

A corresponding distinction is made for the non-locating designs AL and BL.

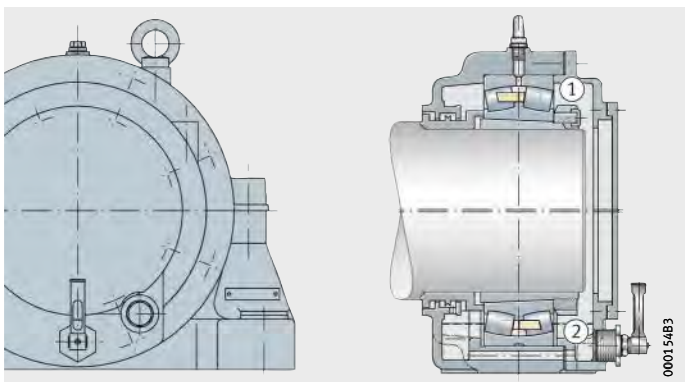

① Locating bearing (AF)
② Non-locating bearing (AL)

Figure 15
Plummer block housing PM30..-H for bearings with tapered bore and adapter sleeve, design A

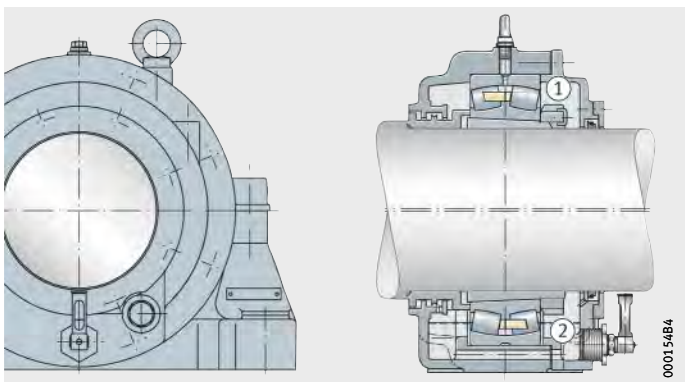

① Locating bearing (BF)
② Non-locating bearing (BL)

Figure 16
Plummer block housing PM30..-H for bearings with tapered bore and adapter sleeve, design B

Bearing housings

The normal material for the housing body is GG (suffix L).
Housings made from GGG (suffix D) are also available by agreement.

The housings are designed for oil sump lubrication.
If recirculating oil lubrication is to be used, the housings must be converted.

The seal comprises a labyrinth.

The eye bolts in the upper section of the housing must not be subjected to a load greater than the mass of the housing including the bearing.

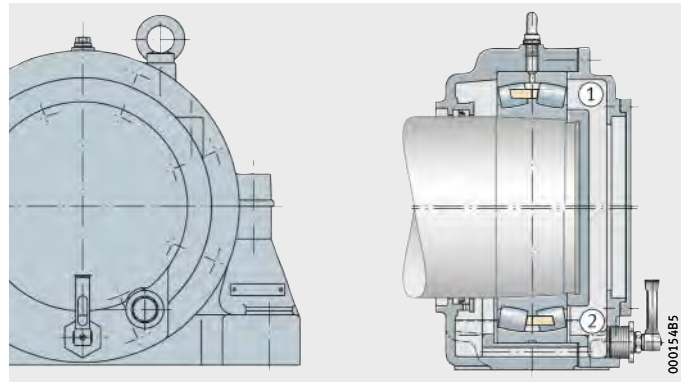

① Locating bearing (AF)
② Non-locating bearing (AL)

Figure 17
Plummer block housing PM30..-K for bearings with tapered bore, direct seat, design A

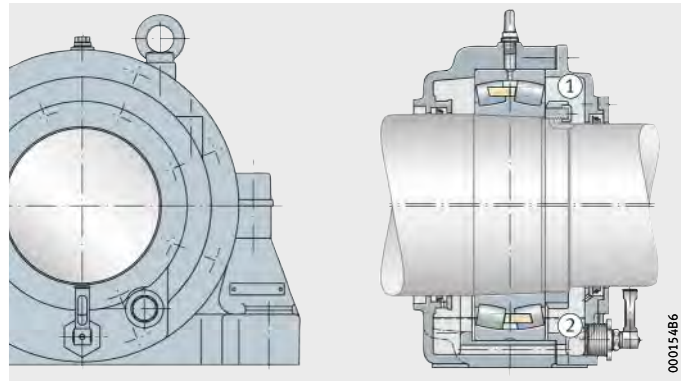

① Locating bearing (BF)
② Non-locating bearing (BL)

Figure 18
Plummer block housing PM30..-K for bearings with tapered bore, direct seat, design B

Split plummer block housings RA

The split plummer block housings RA were originally developed for the bearing arrangements of pinion drives.

They are suitable for spherical roller bearings of series 230 and 239 with a cylindrical bore (housing RA..-Z), *Figure 19* and *Figure 20*, or for bearings of the same series with a tapered bore and withdrawal sleeve (housing RA..-AH), *Figure 21* and *Figure 22*, page 920.

The housings are produced as non-locating bearing housings or as locating bearing housings. When ordering housings of series RA..-Z and RA..-AH closed on one side, design A must be indicated in the order.
Housings RA..-Z and RA..-AH of design B are intended for continuous shafts.

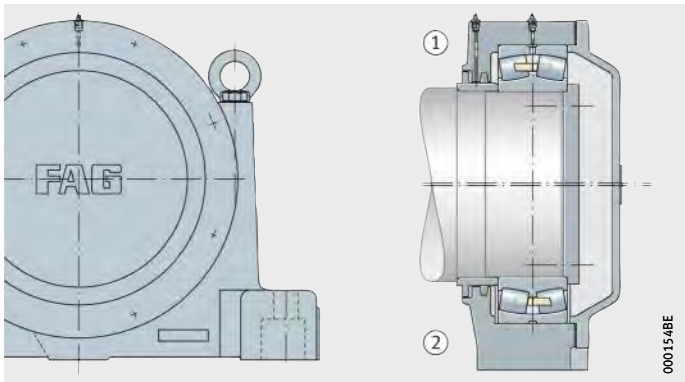

① Locating bearing (AF)
② Non-locating bearing (AL)

Figure 19
Plummer block housing RA..-Z, for bearings with cylindrical bore, design A

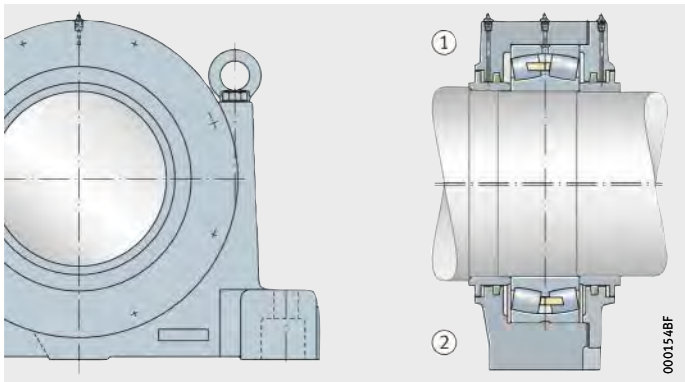

① Locating bearing (BF)
② Non-locating bearing (BL)

Figure 20
Plummer block housing RA..-Z, for bearings with cylindrical bore, design B

Bearing housings

The housings are designed for grease lubrication.
Grease can be fed directly into the centre of the bearing for relubrication via a nipple in the upper section of the housing.

The labyrinth seal can also be relubricated.
The labyrinth is separated from the bearing cavity by a felt seal, so a more economical grease can be used for labyrinth lubrication.

The normal material for the housing body is GG (suffix L).
Housings made from GGG (suffix D) are also available by agreement.

The eye bolts in the upper section of the housing must not be subjected to a load greater than the mass of the housing including the bearing.

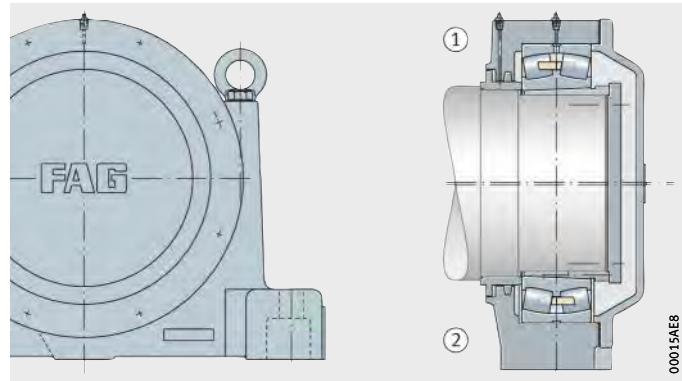

① Locating bearing (AF)
② Non-locating bearing (AL)

Figure 21
Plummer block housing RA..-AH, for bearings with tapered bore and withdrawal sleeve, design A

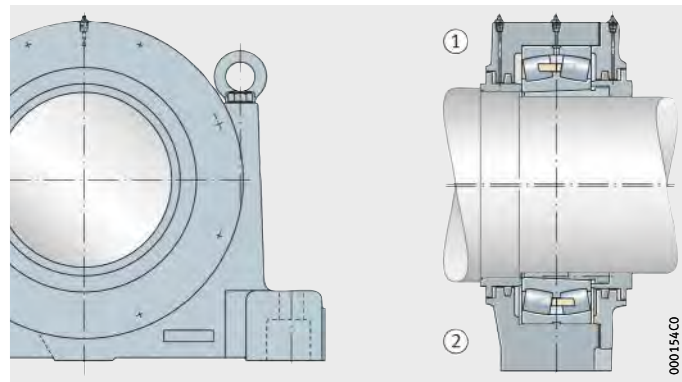

① Locating bearing (BF)
② Non-locating bearing (BL)

Figure 22
Plummer block housing RA..-AH, for bearings with tapered bore and withdrawal sleeve, design B

Split plummer block housings RLE

The split plummer block housings RLE were developed for the bearing arrangements of back-up rollers.

They are suitable for spherical roller bearings of series 241 with a cylindrical bore (housing design Z), *Figure 23* and *Figure 24*, or for bearings of the same series with a tapered bore and withdrawal sleeve (design AH), *Figure 25* and *Figure 26*, page 922.

The housings are produced as non-locating bearing housings or as locating bearing housings. When ordering housings closed on one side, design A must be indicated in the order.
Housings of design B are intended for continuous shafts.

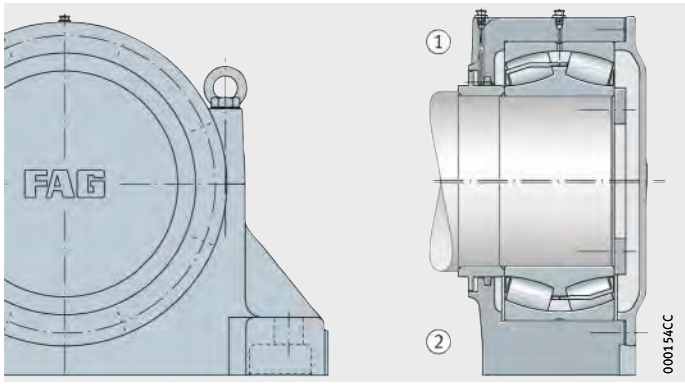

① Locating bearing (AF)
② Non-locating bearing (AL)

Figure 23
Plummer block housing RLE..-Z, for bearings with cylindrical bore, design A

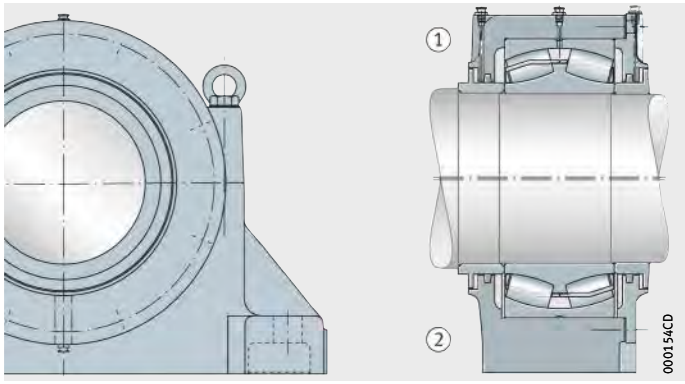

① Locating bearing (BF)
② Non-locating bearing (BL)

Figure 24
Plummer block housing RLE..-Z, for bearings with cylindrical bore, design B

Bearing housings

The housings are designed for grease lubrication.
Grease can be fed into the bearing for relubrication via a nipple in the upper section of the housing.

The labyrinth seal can also be relubricated.
The labyrinth is separated from the bearing cavity by a felt seal, so a more economical grease can be used for labyrinth lubrication.

The normal material for the housing body is GG (suffix L).
Housings made from GS (suffix S) or GGG (suffix D) are also available by agreement.

The eye bolts in the upper section of the housing must not be subjected to a load greater than the mass of the housing including the bearing.

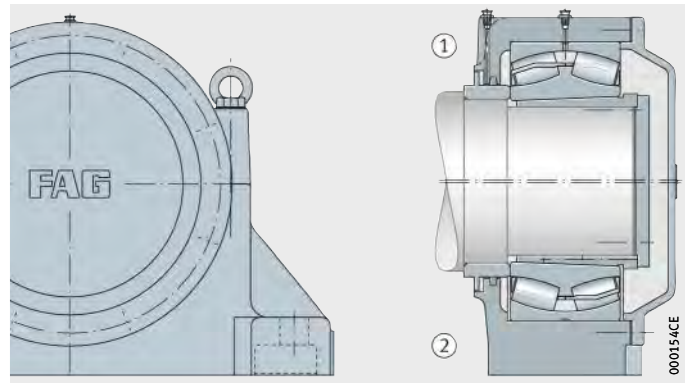

① Locating bearing (AF)
② Non-locating bearing (AL)

Figure 25
Plummer block housing RLE..-AH, for bearings with tapered bore and withdrawal sleeve, design A

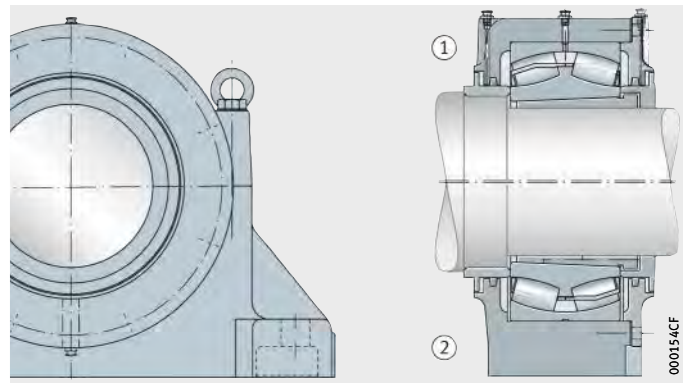

① Locating bearing (BF)
② Non-locating bearing (BL)

Figure 26
Plummer block housing RLE..-AH, for bearings with tapered bore and withdrawal sleeve, design B

Split plummer block housings S30

Split plummer block housings for spherical roller bearings 230..-K with tapered bore and adapter sleeve, *Figure 27* and *Figure 28*.

The housings can also be fitted with split spherical roller bearings 230SM.

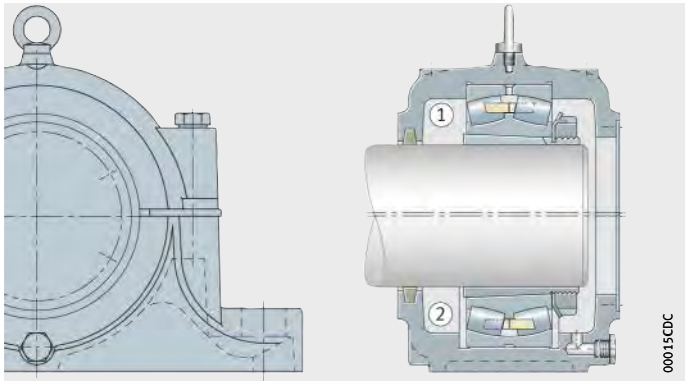

① Locating bearing (AF)
② Non-locating bearing (AL)

Figure 27
Plummer block housing S30 from size S3044, design A

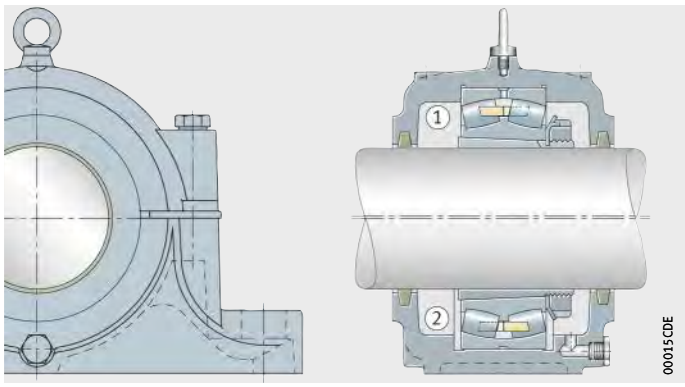

① Locating bearing (BF)
② Non-locating bearing (BL)

Figure 28
Plummer block housing S30 from size S3044, design B

Plummer block housings of series S30 for spherical roller bearings of series 230..-K with tapered bore and adapter sleeve

The housings from S3044 are produced as non-locating bearing housings or as locating bearing housings. When ordering housings closed on one side, design A must be indicated in the order.

The cover is made from steel. Housings of design B are intended for continuous shafts.

The housings are sealed using felt strips (suffix FZ).
Felt seals allow shaft misalignment of up to 0,5° in both directions.

Labyrinth seals (suffix SS) or Taconite seals (suffix TCS) are also available by agreement.

Housings of series S30 can be relubricated via a lubrication connector in the centre of the housing.

The eye bolt must not be subjected to a load greater than the mass of the housing including the bearing.

The normal material used is flake graphite cast iron (suffix L). Housings made from GGG (D) or GS (S) are available by agreement.

Load carrying capacity: see also section Load carrying capacity of split plummer block housings, page 942.

The axial load carrying capacity is max. 35% of $F_{180°}$.

Lubrication

The quantities stated are valid for the initial filling of S30 housings. The bearings are thus filled completely and the housing cavities are filled to 60%.

Recommended grease quantity

Housing	Grease quantity for initial filling ≈g
S3044	2 700
S3048	2 700
S3052	3 700
S3056	4 200
S3060	5 200
S3064	5 500
S3068	6 800
S3072	7 200
S3076	8 600
S3080	10 400
S3084	12 000
S3088	13 200
S3092	14 600
S3096	15 100

Split plummer block housings SD5

Split plummer block housings of series SD5 are combined with spherical roller bearings, seals and grease filling to form bearing units, for use in applications such as general machine building.

The dimensions of split plummer block housings SD5 are matched to spherical roller bearings of series 222..-K with adapter sleeve and split spherical roller bearings 222SM.

In design A for bearing arrangements on shaft ends, one side is closed off by a cover, *Figure 29*.
Design B is intended for continuous shafts, *Figure 30*.

The normal material for the housing body is flake graphite cast iron (suffix L). Housings made from GGG (suffix D) or GS (suffix S) are also available by agreement.

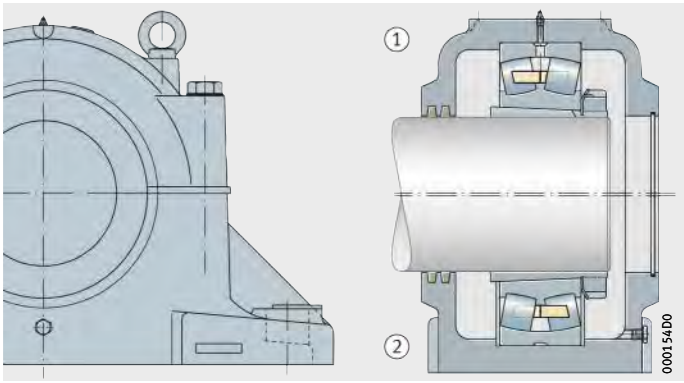

① Locating bearing (AF)
② Non-locating bearing (AL)

Figure 29
Plummer block housing SD5 for bearings with tapered bore and adapter sleeve, design A

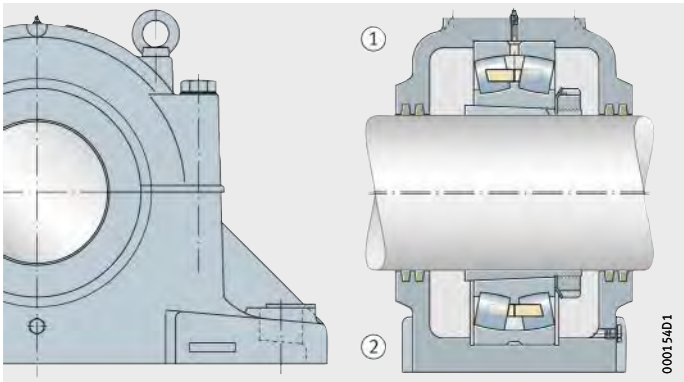

① Locating bearing (BF)
② Non-locating bearing (BL)

Figure 30
Plummer block housing SD5 for bearings with tapered bore and adapter sleeve, design B

Bearing housings

Bearing seat and fitting of bearings

The bearing seat in the housing is machined to H7.
The housings are supplied as a locating bearing design or non-locating bearing design.

Shaft seats for bearings with a tapered bore seated on adapter sleeves should be machined to h8.
Housings SD5 can be fitted with spherical roller bearings 222..-K with adapter sleeve and split spherical roller bearings 222SM.

Lubrication

The housings are designed for grease lubrication.
Housings of the normal design have the suffix N.
For housings with grease valves, the suffix R is used.

Sealing

Plummer block housings SD5 are generally sealed on one side (design A) or on both sides (design B) with felt seals (suffix FZ).
Housings with labyrinth seals (SS) are also available by agreement.

Split plummer block housings SD31

Split plummer block housings for spherical roller bearings 231..-K with tapered bore and adapter sleeves, *Figure 31* to *Figure 34*, page 928.

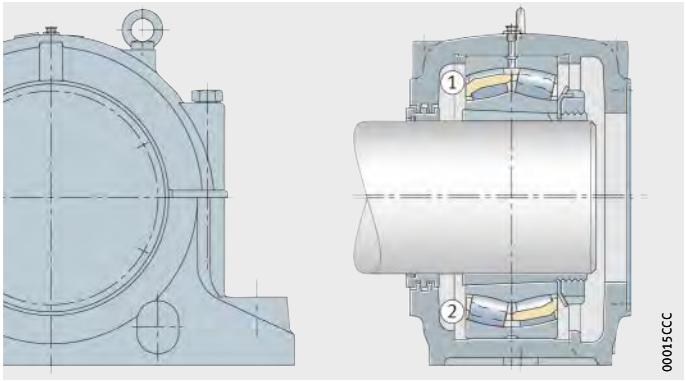

① Locating bearing
② Non-locating bearing

Figure 31
Plummer block housing SD31 up to and including size SD3140, design A

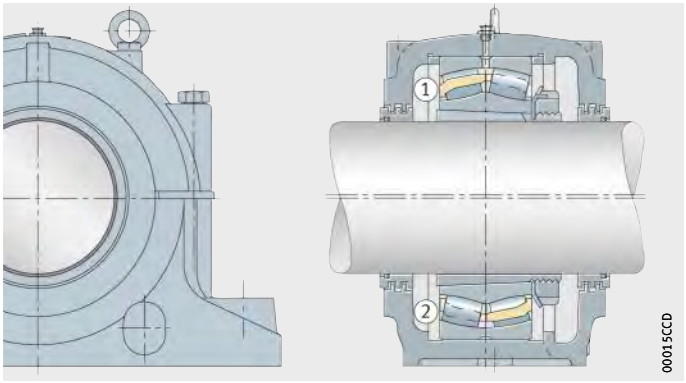

① Locating bearing
② Non-locating bearing

Figure 32
Plummer block housing SD31 up to and including size SD3140, design B

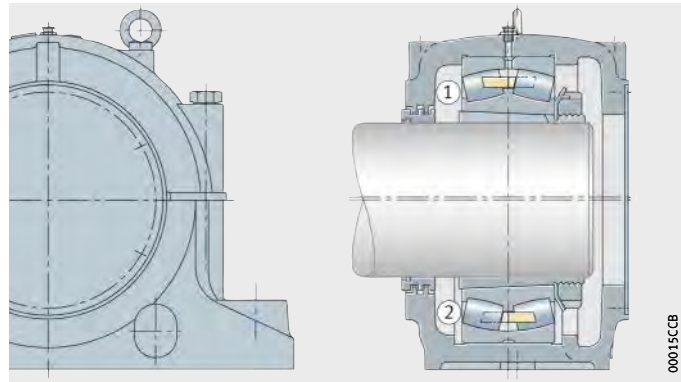

① Locating bearing (AF)
② Non-locating bearing (AL)

Figure 33
Plummer block housing SD31 from size SD3144, design A

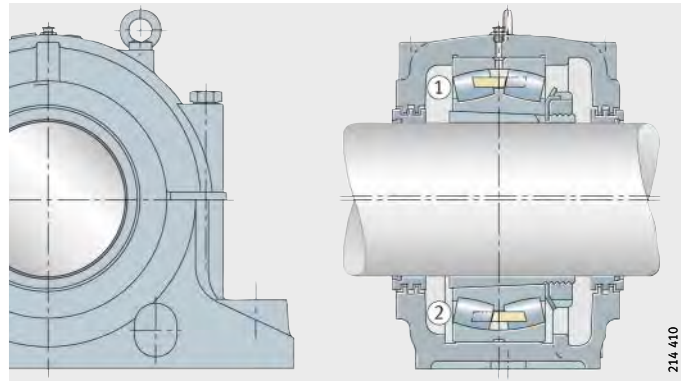

① Locating bearing (BF)
② Non-locating bearing (BL)

Figure 34
Plummer block housing SD31 from size SD3144, design B

Plummer block housings of series SD31 for spherical roller bearings of series 231..-K with tapered bore and adapter sleeve

These housings are intended for bearing arrangements subjected to heavy loads. The bearings are located on the shaft by means of adapter sleeves. The housings can also be fitted with split spherical roller bearings 231SM.

From SD3144, the housings are supplied as a locating bearing design or non-locating bearing design. Smaller housings initially give non-locating bearing arrangements.
Locating bearing arrangements can be achieved by the insertion of locating rings on both sides of the bearing.
Locating rings must be ordered separately.

The housings are intended for grease lubrication and can be relubricated via a lubrication nipple.

For the holes required for oil lubrication, the upper and lower section of the housings have cast-on bosses.

The seal comprises a three-section labyrinth (TS). Labyrinth seals allow shaft misalignments of 0,25° in both directions.
Housings with Taconite seals (D) are also available by agreement.

Housings closed on one side (design A) are supplied with a steel cover.

The eye bolts in the upper section of the housing must not be subjected to a load greater than the mass of the housing including the bearing.

The normal material used is flake graphite cast iron (suffix L). Housings made from GGG (D) or GS (S) are available by agreement.

Load carrying capacity: see also section Load carrying capacity of split plummer block housings, page 942.

The axial load carrying capacity is max. $^{2}/_{3}$ of $F_{180°}$.

Lubrication

The quantities stated are valid for the initial filling of SD31 housings. The bearings are thus filled completely and the housing cavities are filled to 60%.

Recommended grease quantity

Housing	Grease quantity for initial filling ≈g
SD3138	2 800
SD3140	3 600
SD3144	4 200
SD3148	5 200
SD3152	6 700
SD3156	7 000
SD3160	10 000
SD3164	12 000
SD3168	18 000
SD3172	18 000
SD3176	23 000
SD3180	23 000
SD3184	32 000
SD3188	32 000
SD3192	40 000
SD3196	40 000

Unsplit plummer block housings BND

Unsplit FAG housings of series BND are combined with FAG spherical roller bearings, seals and grease filling to form bearing units for very high demands, *Figure 35* to *Figure 46*, page 933.

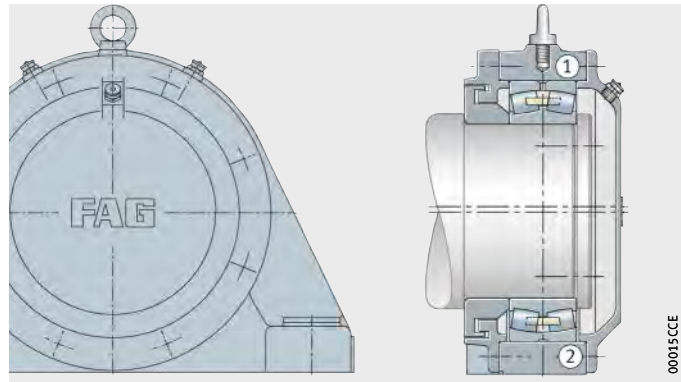

① Locating bearing BND..-Z-Y-AF-S
② Non-locating bearing BND..-Z-Y-AL-S

Figure 35
Plummer block housing BND for bearings with cylindrical bore (labyrinth seal), design A

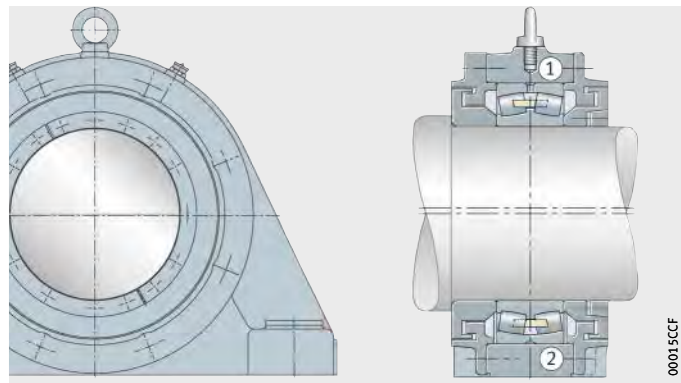

① Locating bearing BND..-Z-Y-BF-S
② Non-locating bearing BND..-Z-Y-BL-S

Figure 36
Plummer block housing BND for bearings with cylindrical bore (labyrinth seal), design B

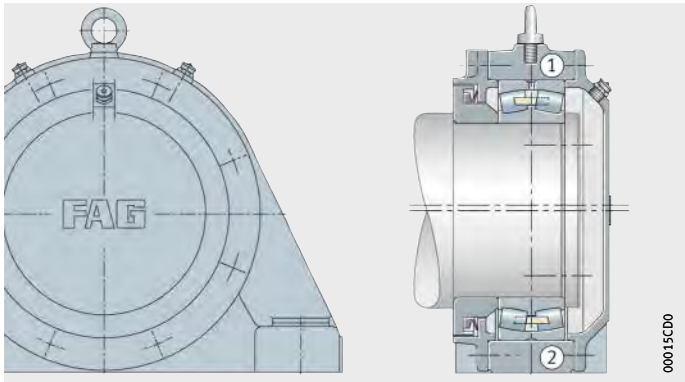

① Locating bearing BND..-Z-T-AF-S
② Non-locating bearing BND..-Z-T-AL-S

Figure 37
Plummer block housing BND
for bearings with cylindrical bore
(Taconite seal), design A

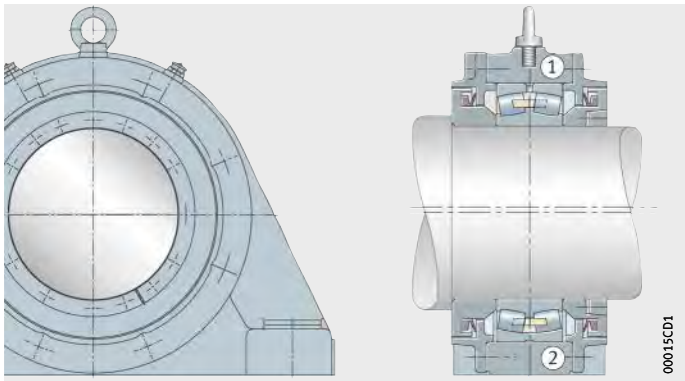

① Locating bearing BND..-Z-T-BF-S
② Non-locating bearing BND..-Z-T-BL-S

Figure 38
Plummer block housing BND
for bearings with cylindrical bore
(Taconite seal), design B

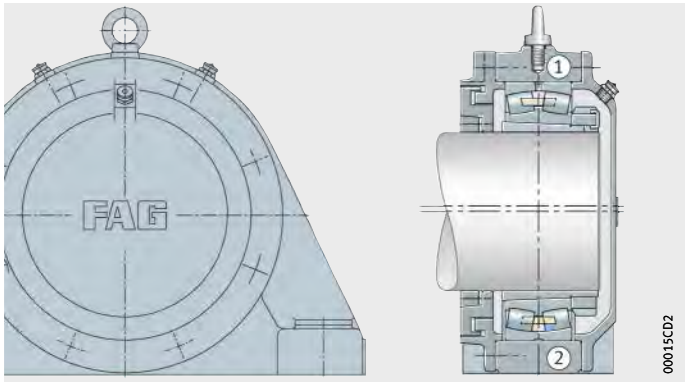

① Locating bearing BND..-H-W-Y-AF-S
② Non-locating bearing BND..-H-W-Y-AL-S

Figure 39
Plummer block housing BND
for bearings with tapered bore and
adapter sleeve (labyrinth seal),
design A

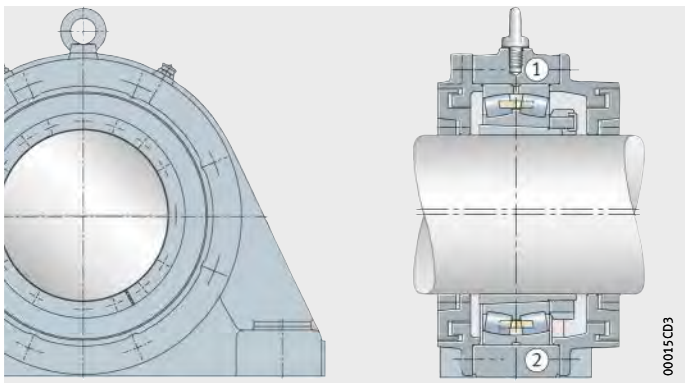

① Locating bearing BND..-H-W-Y-BF-S
② Non-locating bearing BND..-H-W-Y-BL-S

Figure 40
Plummer block housing BND
for bearings with tapered bore and
adapter sleeve (labyrinth seal),
design B

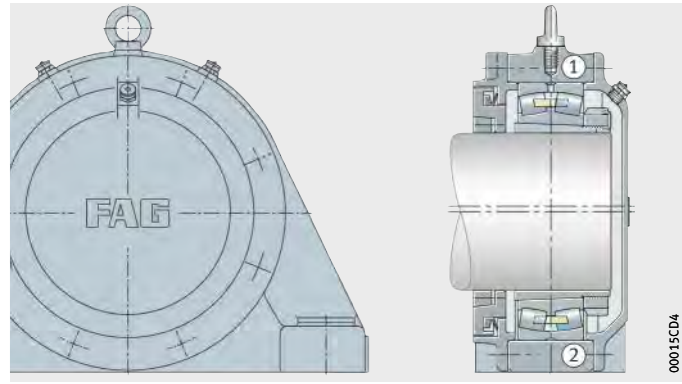

① Locating bearing BND..-H-W-T-AF-S
② Non-locating bearing BND..-H-W-T-AL-S

Figure 41
Plummer block housing BND for bearings with tapered bore and adapter sleeve (Taconite seal), design A

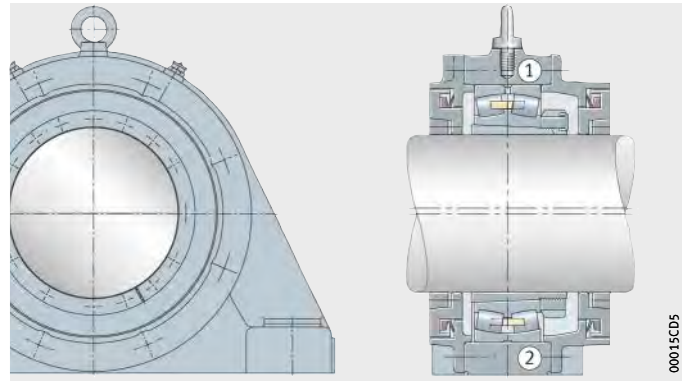

① Locating bearing BND..-H-W-T-BF-S
② Non-locating bearing BND..-H-W-T-BL-S

Figure 42
Plummer block housing BND for bearings with tapered bore and adapter sleeve (Taconite seal), design B

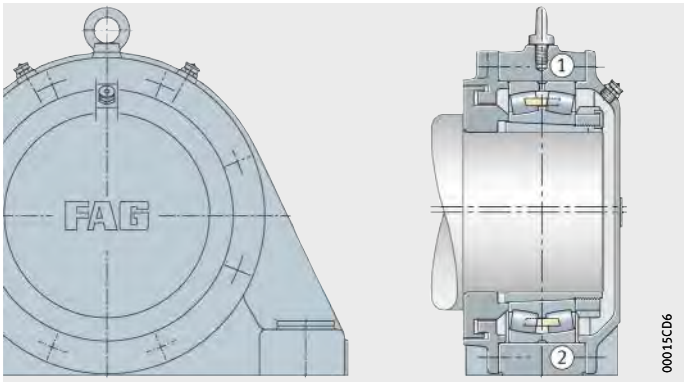

① Locating bearing BND..-H-C-Y-AF-S
② Non-locating bearing BND..-H-C-Y-AL-S

Figure 43
Plummer block housing BND for bearings with tapered bore and adapter sleeve and for shaft with abutment shoulder (labyrinth seal), design A

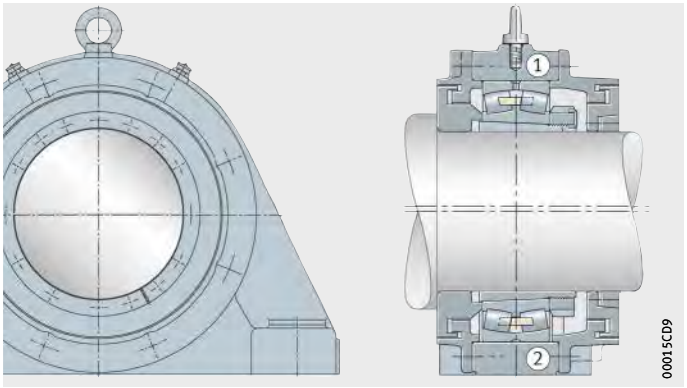

① Locating bearing BND..-H-C-Y-BF-S
② Non-locating bearing BND..-H-C-Y-BL-S

Figure 44
Plummer block housing BND for bearings with tapered bore and adapter sleeve and for shaft with abutment shoulder (labyrinth seal), design B

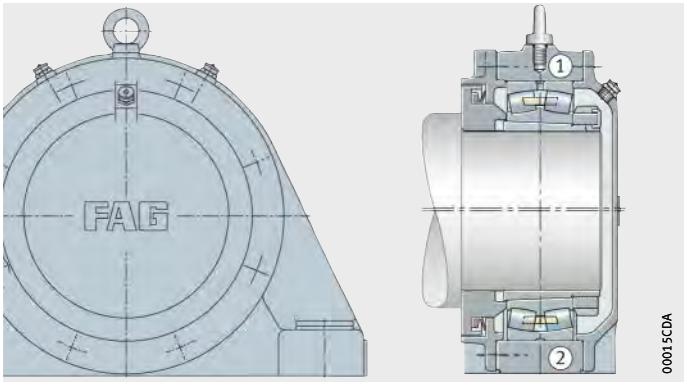

① Locating bearing BND..-H-C-T-AF-S
② Non-locating bearing BND..-H-C-T-AL-S

Figure 45
Plummer block housing BND for bearings with tapered bore and adapter sleeve and for shaft with abutment shoulder (Taconite seal), design A

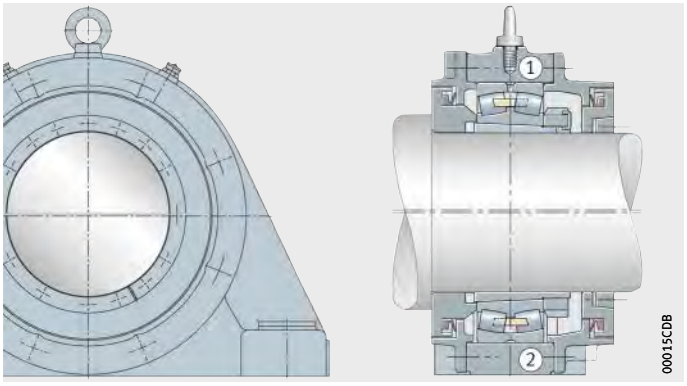

① Locating bearing BND..-H-C-T-BF-S
② Non-locating bearing BND..-H-C-T-BL-S

Figure 46
Plummer block housing BND for bearings with tapered bore and adapter sleeve and for shaft with abutment shoulder (Taconite seal), design B

Bearing housings

Unsplit housings of series BND, originally developed for belt conveyors, can also be beneficially used in materials processing, for example in hard crushers and sugar cane mill drives as well as on rotor shafts in wind turbines. The dimensions of housings BND are matched to spherical roller bearings of series 222, 230, 231 and 232. In housings BND of design A for the bearing arrangements of shaft ends, one side is closed by a cover.

Design B is intended for continuous shafts. The housing body, labyrinth rings and cover are unsplit. The labyrinth rings are located by means of split tapered rings made from laminated fabric material. The labyrinth gaps are dimensioned so that the shaft can undergo deflection of approx. 0,5° in both directions without the labyrinths touching the bore.

Material

The standard material for the housing bodies is cast steel (suffix S). If required, housing bodies made from spheroidal graphite cast iron (suffix D) are available.

Bearing seat and fitting of bearings

The bearing seat in the housing is machined to H7. The housings are supplied as a locating bearing design or non-locating bearing design. In the locating bearing, the bearing is clamped between the housing covers. In the non-locating bearing, the bearing can align itself axially, since the covers have shorter centring collars.

Housings BND can accommodate rolling bearings with a cylindrical bore that are seated directly on a stepped shaft.
We recommend machining the shaft to m6 for these bearings. Shaft seats for bearings with a tapered bore seated on adapter sleeves should be machined to h8.

Seals

Plummer block housings BND are sealed on one side (design A) or on both sides (design B) with labyrinths (suffix Y).
If required, Taconite seals (suffix T) are available with a V ring integrated in the labyrinth (these must be provided with a separate relubrication facility).

Load carrying capacity

Guide values for the rupture load of housings BND: see section Housings BND, page 946.
When determining the permissible load, a safety factor of 6 should be applied to the housing rupture load.

Housings BND have a maximum axial load carrying capacity corresponding to 20% of the housing rupture load $F_{180°}$.
For load directions between 55° and 120° and axial load, we recommend that the housings should be secured in the load direction by means of stops or dowels.

The eye bolts in the upper section of the housing must not be subjected to a load greater than the mass of the housing including the bearing.

Lubrication

The housings BND are designed for grease lubrication.
Suitable lubricants are lithium soap greases of consistency 2 and 3, for example the rolling bearing grease MULTI3 for low loads and MULTITOP and LOAD400 for high and very high loads.
The housings have button head lubrication nipples with a head diameter standardised to DIN 3 404 of 22 mm. The grease is fed uniformly to both rows of rollers via the circumferential slot and three lubrication holes in the outer ring of the spherical roller bearings.

In initial lubrication, the cavities in the bearing, the housing and the labyrinths are completely filled with grease.

Recommended grease quantities: see table, page 936.

The relubrication intervals should be matched to the environmental conditions. The bearings should be relubricated after an interval of no more than four weeks.

For relubrication, we recommend approx. 10% of the grease used for initial filling. For machinery operating in highly contaminated environments, relubrication should be carried out daily with small quantities.

The quantities stated are valid for the initial filling of BND housings. The bearings and housing cavities are thus filled completely.

Recommended grease quantity

Bearing bore	Grease quantity for initial filling	
mm	BND22, BND31, BND32 ≈g	BND30 ≈g
180	2 500	–
190	3 000	–
200	3 600	–
220	4 200	1 900
240	5 000	2 100
260	6 000	2 500
280	7 000	3 000
300	8 000	3 500
320	9 000	4 100
340	10 500	4 800
360	12 000	5 500
380	13 000	6 200
400	14 500	7 000
420	16 000	8 000

Unsplit plummer block housings BNM

Unsplit FAG housings of series BNM are combined with spherical roller bearings with tapered bore and withdrawal sleeves, seals and grease filling to form bearing units, *Figure 47* and *Figure 48*. The housings are used in applications such as mills.

The dimensions of unsplit plummer block housings BNM are matched to spherical roller bearings of series 232..-K.
In housings BNM of design A for the bearing arrangements of shaft ends, one side is closed by a cover. Design B is intended for continuous shafts. The housing body, labyrinth rings and cover are unsplit. The normal material for the housing body is cast steel.

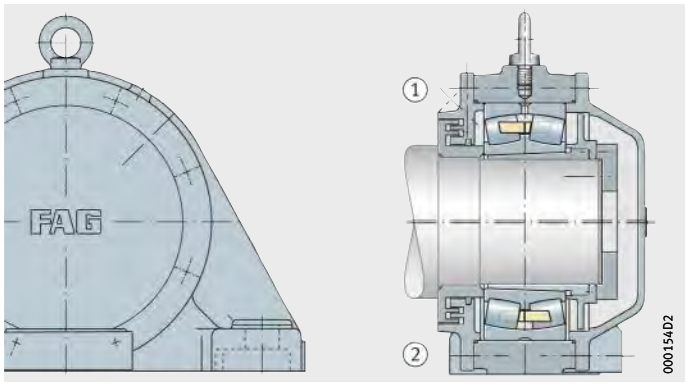

① Locating bearing BNM..-AH-R-AF
② Non-locating bearing BNM..-AH-R-AL

Figure 47
Plummer block housing BNM for bearings with tapered bore and withdrawal sleeve, design A

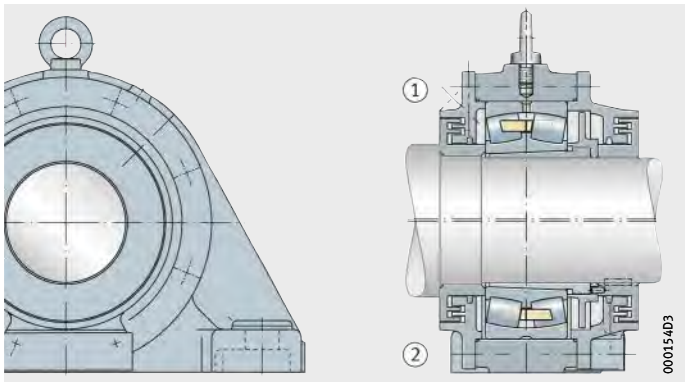

① Locating bearing BNM..-AH-R-BF
② Non-locating bearing BNM..-AH-R-BL

Figure 48
Plummer block housing BNM for bearings with tapered bore and withdrawal sleeve, design B

Bearing housings

Bearing seat and fitting of bearings

The bearing seat in the housing is machined to H7. The housings are supplied as a locating bearing design or non-locating bearing design. In the locating bearing, the bearing is clamped between the housing covers. In the non-locating bearing, the bearing can align itself axially, since the covers have shorter centring collars. Shaft seats for bearings with a tapered bore seated on adapter sleeves should be machined to h8.

Lubrication

The housings BNM are designed for grease lubrication. For operation at high speeds, the housings have grease valves (suffix R). Plummer block housings BNM are sealed on one side (design A) or on both sides (design B) by labyrinths.

Take-up housings
Unsplit take-up housings SPA

Unsplit FAG housings of series SPA are combined with FAG spherical roller bearings, seals and grease filling to form bearing units for very high demands, *Figure 49* and *Figure 50*.

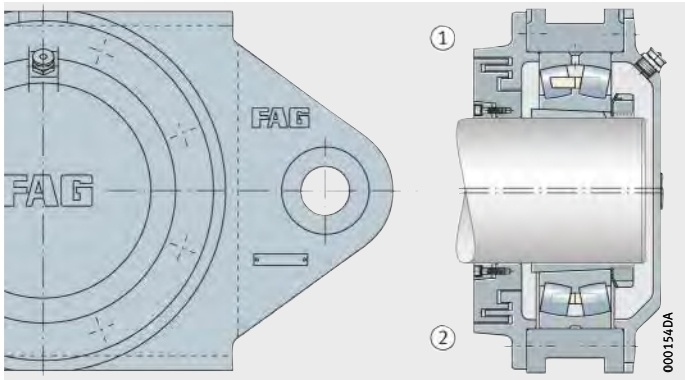

① Locating bearing SPA..-H-W-Y-AF-S
② Non-locating bearing SPA..-H-W-Y-AL-S

Figure 49
Take-up housing SPA for bearings with tapered bore and adapter sleeve (labyrinth seal), design A

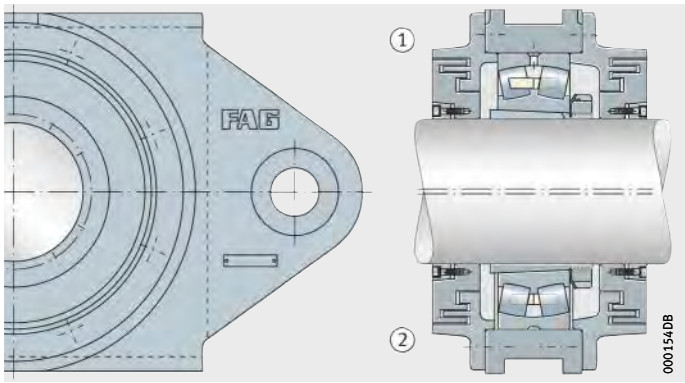

① Locating bearing SPA..-H-W-Y-BF-S
② Non-locating bearing SPA..-H-W-Y-BL-S

Figure 50
Take-up housing SPA for bearings with tapered bore and adapter sleeve (labyrinth seal), design B

Housings of series SPA were developed specifically for tensioner drum bearing arrangements in belt conveyor plant. A yoke-shaped drawbar eye is cast on for attachment to the tensioning device. The housing is guided by means of rails in the belt support structure.

The dimensions of housings SPA are matched to spherical roller bearings of series 222, 230, 231 and 232. In housings SPA of design A for the bearing arrangements of shaft ends, one side is closed by a cover. Design B is intended for continuous shafts. The housing body, cover and labyrinth rings are unsplit.

The labyrinth rings are located by means of split tapered rings made from laminated fabric material. The labyrinth gaps are dimensioned so that the shaft can undergo deflection of approx. 0,5° in both directions without the labyrinths touching the bore.

Bearing housings

Material

The standard material for the housing bodies is cast steel (suffix S). If required, housing bodies made from spheroidal graphite cast iron (suffix D) are available.

Bearing seat and fitting of bearings

The bearing seat in the housing is machined to H7. The housings are supplied as a locating bearing design or non-locating bearing design. In the locating bearing (F), the bearing is clamped between the housing covers. In the non-locating bearing (L), the bearing can align itself axially, since the covers have shorter centring collars.

The housings can accommodate spherical roller bearings with a tapered bore located on adapter sleeves.
For machining of the shaft seat, we recommend the tolerance h8.

Seals

Take-up housings SPA are sealed on one side (design A) or on both sides (design B) by labyrinths (suffix Y). If required, Taconite seals (suffix T) are available with a V ring integrated in the labyrinth (these must be provided with a separate relubrication facility).

Lubrication

The housings SPA are designed for grease lubrication.
Suitable lubricants are lithium soap greases of consistency 2 or 3, for example the rolling bearing grease MULTI3 for low loads and MULTITOP and LOAD400 for high and very high loads.
The housings have button head lubrication nipples with a head diameter standardised to DIN 3404 of 22 mm. The grease is fed uniformly to both rows of rollers via the circumferential slot and three lubrication holes in the outer ring of the spherical roller bearings.

In initial lubrication, the cavities in the bearing, the housing and the labyrinths are completely filled with grease.

Recommended grease quantities: see table.

The relubrication intervals should be matched to the environmental conditions. The bearings should be relubricated after an interval of no more than four weeks.

For relubrication, we recommend approx. 10% of the grease used for initial filling. For machinery operating in highly contaminated environments, relubrication should be carried out daily with small quantities.

The quantities stated are valid for the initial filling of SPA housings. The bearings and housing cavities are thus filled completely.

Recommended grease quantity

Bearing bore	Grease quantity for initial filling	
	SPA22, SPA31, SPA32	SPA30
mm	≈g	≈g
180	2 500	–
190	3 000	–
200	3 600	–
220	4 200	1 900
240	5 000	2 100
260	6 000	2 500
280	7 000	3 000
300	8 000	3 500
320	9 000	4 100
340	10 500	4 800
360	12 000	5 500
380	13 000	6 200
400	14 500	7 000
420	16 000	8 000



Design and safety guidelines

Load carrying capacity of split plummer block housings

The permissible load on the housing is dependent on the strength of the housing and connecting screws, the load carrying capacity of the bearing and on the load direction.

Guide values for the rupture load of the housings and the maximum load carrying capacity of the screws connecting the upper and lower sections of the housing for housings S30 and SD31 are given on pages 943 and 944. Values for other split housings are available by agreement.

When determining the permissible load, safety factors must be applied. For general machine building, a safety factor of 6 relative to the housing rupture load is normally applied.

The values in the tables apply if the mounting surface of the mating parts is in accordance with DIN ISO 2 768-H. A precondition for supporting loads is that the housing base surface is completely and rigidly supported.



Housings SD31 have a maximum axial load carrying capacity corresponding to $^{2}/_{3}$ of the housing rupture load $F_{180°}$, housings S30 have a maximum axial load carrying capacity corresponding to 35% of $F_{180°}$. For load directions between 55% and 120% and axial load, we recommend that the housings should be secured in the load direction by means of stops or dowels.

The eye bolts in the upper section of the housing must not be subjected to a load greater than the mass of the housing including the bearing.

Housings S30

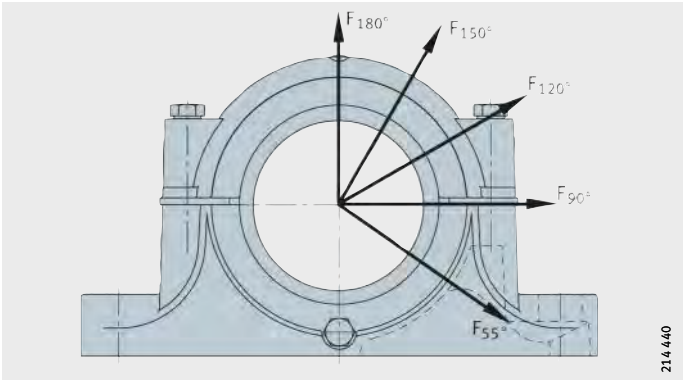

Figure 51
Guide values for the rupture load of housings S30 and the maximum load carrying capacity of the connecting screws (tightening torques, see also page 947)

Housing Designation	Housing rupture load in load direction F Housing made from flake graphite cast iron (suffix L) For housings made from spheroidal graphite cast iron (suffix D), multiply the stated values by 1,6					Connecting screws			
						Thread to DIN 13	Maximum load carrying capacity of both screws with contact between parting surfaces in load direction		
	55° kN	90°	120°	150°	180°	Material 8.8	120° kN	150°	180°
S3044	1 700	1 020	765	680	850	M30	640	370	320
S3048	1 900	1 130	845	750	940	M30	640	370	320
S3052	2 200	1 320	990	880	1 100	M36	800	460	400
S3056	2 500	1 500	1 120	1 000	1 300	M36	800	460	400
S3060	2 700	1 620	1 215	1 080	1 350	M36	800	460	400
S3064	2 900	1 740	1 305	1 160	1 450	M36	800	460	400
S3068	3 200	1 920	1 440	1 280	1 600	M36	800	460	400
S3072	3 500	2 100	1 575	1 400	1 750	M36	800	460	400
S3076	3 900	2 340	1 755	1 560	1 950	M36	800	460	400
S3080	4 300	2 580	1 935	1 720	2 150	M36	800	460	400
S3084	4 900	2 940	2 205	1 960	2 450	M36	800	460	400
S3088	5 300	3 180	2 385	2 120	2 650	M36	800	460	400
S3092	6 100	3 660	2 745	2 440	3 050	M48	1 340	770	670
S3096	7 000	4 200	3 150	2 800	3 500	M48	1 340	770	670

Housings SD31

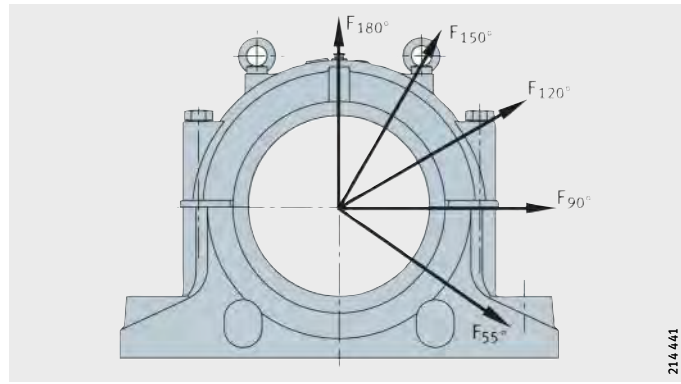

Figure 52
Guide values for the rupture load of housings SD31 and the maximum load carrying capacity of the connecting screws (tightening torques, see also page 947)

Housing Designation	Housing rupture load in load direction F Housing made from flake graphite cast iron (suffix L) For housings made from spheroidal graphite cast iron (suffix D), multiply the stated values by 1,6					Connecting screws			
						Thread to DIN 13	Maximum load carrying capacity of the four screws with contact between parting surfaces in load direction		
	55° kN	90°	120°	150°	180°	Material 8.8	120° kN	150°	180°
SD3138	3 000	1 350	1 150	1 100	1 200	M20	520	300	260
SD3140	4 000	1 700	1 450	1 400	1 600	M24	720	420	360
SD3144	4 250	1 900	1 600	1 500	1 700	M24	720	420	360
SD3148	4 600	2 300	1 800	1 600	1 850	M24	720	420	360
SD3152	5 500	2 550	2 150	2 050	2 200	M30	1 280	740	640
SD3156	6 600	3 100	2 400	2 250	2 650	M30	1 280	740	640
SD3160	7 750	3 400	2 900	2 800	3 100	M30	1 280	740	640
SD3164	8 100	3 650	3 100	3 000	3 250	M30	1 280	740	640
SD3168	8 850	4 000	3 200	3 100	3 550	M30	1 280	740	640
SD3172	9 750	4 500	3 350	3 250	3 900	M30	1 280	740	640
SD3176	10 300	4 800	3 400	3 300	4 150	M30	1 280	740	640
SD3180	10 700	5 000	3 500	3 400	4 300	M36	1 600	920	800
SD3184	12 000	5 800	4 000	3 750	4 800	M36	1 600	920	800
SD3188	12 400	5 950	4 450	3 950	4 950	M36	1 600	920	800
SD3192	13 300	6 350	4 750	4 250	5 300	M36	1 600	920	800
SD3196	14 300	6 850	5 150	4 550	5 700	M42	2 060	1 180	1 030

Load carrying capacity of unsplit plummer block housings

The permissible load on the housing is dependent on the strength of the housing, the load carrying capacity of the bearing and on the load direction. Guide values for the rupture load of housings BND are given in the following table, page 946.
Values for other unsplit housings are available by agreement.

When determining the permissible load, safety factors must be applied. For general machine building, a safety factor of 6 relative to the housing rupture load is normally applied.

The values in the tables apply if the mounting surface of the mating parts is in accordance with DIN ISO 2 768-H.
A precondition for supporting loads is that the housing base surface is completely and rigidly supported.



Housings BND

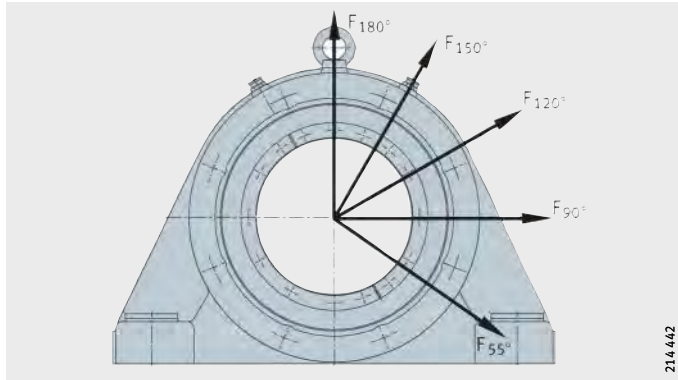

Figure 53
Guide values for the rupture load of housings BND made from cast steel and spheroidal graphite cast iron

Housing Designation				Housing rupture load in load direction F				
				55° kN	90°	120°	150°	180°
BND2236	–	–	–	4 435	3 570	3 470	2 755	3 470
BND2238	BND3044	–	–	4 435	3 570	3 470	2 755	3 470
–	–	BND3138	BND3236	4 590	3 725	2 140	1 715	2 140
–	–	BND3140	BND3238	5 610	4 540	2 295	1 835	2 295
BND2240	BND3048	–	–	5 050	4 030	4 895	3 875	4 895
–	–	BND3144	BND3240	6 120	4 935	2 550	2 040	2 550
BND2244	BND3052	–	–	5 660	4 540	5 000	3 980	5 000
–	BND3056	–	–	6 580	5 255	6 120	4 895	6 120
–	–	BND3148	BND3244	6 835	5 510	3 060	2 450	3 060
BND2248	BND3060	–	–	7 295	5 815	6 325	5 100	6 325
–	–	BND3152	BND3248	7 650	6 170	3 570	2 855	3 570
BND2252	BND3064	–	–	8 000	6 425	6 835	5 400	6 835
–	–	BND3156	BND3252	9 385	7 550	4 180	3 365	4 180
BND2256	BND3068	–	–	8 825	7 040	6 835	5 400	6 835
–	–	BND3160	BND3256	10 200	8 260	4 490	3 570	4 490
BND2260	BND3072	–	–	9 640	7 700	8 160	6 530	8 160
–	BND3076	–	–	10 810	8 670	8 365	8 770	8 365
–	–	BND3164	BND3260	11 935	9 535	5 100	4 080	5 100
BND2264	BND3080	–	–	12 035	9 690	9 080	7 240	9 080
–	–	BND3168	BND3264	14 280	11 375	5 815	4 590	5 815
BND2268	BND3084	–	–	13 360	10 760	9 280	7 345	9 280
–	–	BND3172	–	14 485	11 630	6 630	5 300	6 630
BND2272	–	–	–	15 700	12 570	10 370	8 325	10 370
–	–	BND3176	BND3268	16 320	13 055	6 630	5 300	6 630
BND2276	–	–	–	16 600	13 280	10 960	8 800	10 960
–	–	BND3180	BND3272	17 850	14 280	7 345	5 815	7 345
BND2280	–	–	–	19 750	15 800	13 030	10 470	13 030
–	–	–	BND3276	18 870	15 050	8 160	6 530	8 160
–	–	BND3184	–	19 380	15 600	8 160	6 530	8 160
BND2284	–	–	–	21 540	17 240	14 220	11 420	14 220
–	–	–	BND3280	22 440	17 950	9 280	7 445	9 280
–	–	–	BND3284	24 480	19 380	10 710	8 570	10 710

Tightening torques

The tightening torques in the following table are maximum values for metric coarse-pitch threads to DIN 13-13 and head contact dimensions to DIN 912, 931, 933, 934, 6 912, 7 984 and 7 990.

They are valid with 90% utilisation of the yield stress of the screw material 8.8 and a friction factor of 0,14. We recommend that the screws should be tightened to 70% of these values. Housings are not supplied together with screws for the housing base.

Maximum tightening torques for screws with metric thread to DIN 13-13

Nominal screw size	Tightening torque Nm
M16	215
M20	430
M24	740
M30	1 450
M36	2 600
M42	4 000
M45	4 950
M48	6 000
M56	9 650
M64	14 400
M72	21 100
M80	29 300
M90	42 500
M100	59 200



Plummer block housings

KPG, split
For spherical roller bearings with tapered bore and sleeve, for split spherical roller bearings

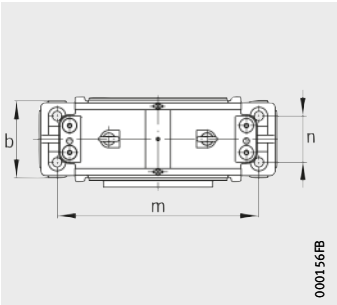

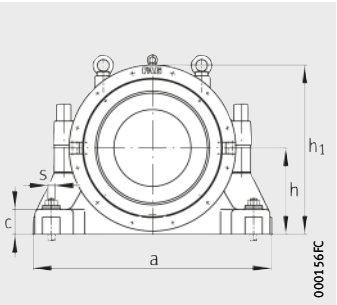

Dimension table · Dimensions in mm

Designation[1)]

Housing		Bearing		Sleeve
Locating bearing	Non-locating bearing	MB cage	Pin cage	
KPG49/470-F-S	**KPG49/470-L-S**	Z-528741.PRL-K30	Z-541821.249/500-K30	Z-524974.KH
KPG49/500-F-S	**KPG49/500-L-S**	Z-528742.PRL-K30	Z-541822.249/530-K30	Z-524976.KH
KPG49/530-F-S	**KPG49/530-L-S**	Z-528743.PRL-K30	Z-541823.249/560-B-K30	Z-524978.KH
KPG49/570-F-S	**KPG49/570-L-S**	Z-528744.PRL-K30	Z-541824.249/600-B-K30	Z-524980.KH
KPG49/600-F-S	**KPG49/600-L-S**	–	Z-541825.249/630-K30	Z-524982.KH
KPG49/630-F-S	**KPG49/630-L-S**	Z-528746.PRL-K30	Z-541826.249/670-K30	Z-524984.KH
KPG49/670-F-S	**KPG49/670-L-S**	Z-528747.PRL-K30	Z-541827.249/710-B-K30	Z-524986.KH
KPG49/710-F-S	**KPG49/710-L-S**	Z-528748.PRL-K30	Z-541828.249/750-B-K30	Z-524988.KH
KPG49/750-F-S	**KPG49/750-L-S**	Z-528749.PRL-K30	Z-541829.249/800-B-K30	Z-524990.KH
KPG49/800-F-S	**KPG49/800-L-S**	Z-528750.PRL-K30	Z-541830.249/850-B-K30	Z-524992.KH
KPG49/850-F-S	**KPG49/850-L-S**	Z-528751.PRL-K30	Z-541831.249/900-B-K30	Z-524994.KH
KPG49/900-F-S	**KPG49/900-L-S**	Z-528752.PRL-K30	Z-541832.249/950-B-K30	Z-524996.KH
KPG49/950-F-S	**KPG49/950-L-S**	Z-528753.PRL-K30	Z-541833.249/1000-B-K30	Z-524998.KH
KPG49/1000-F-S	**KPG49/1000-L-S**	–	Z-541834.249/1060-B-K30	Z-525000.KH
KPG49/1060-F-S	**KPG49/1060-L-S**	–	Z-541835.249/1120-B-K30	Z-525001.KH
KPG49/1120-F-S	**KPG49/1120-L-S**	–	Z-541836.249/1180-B-K30	Z-525003.KH
KPG49/1180-F-S	**KPG49/1180-L-S**	–	Z-541837.249/1250-B-K30	Z-525005.KH
KPG49/1250-F-S	**KPG49/1250-L-S**	–	Z-541838.249/1320-B-K30	Z-525007.KH

1) Ordering example:
Housing KPG49/1000-F-S (see also page 911),
bearing with pin cage Z-541834.249/1060-B-K30 (see bearing tables),
sleeve Z-525000.KH (see bearing tables).

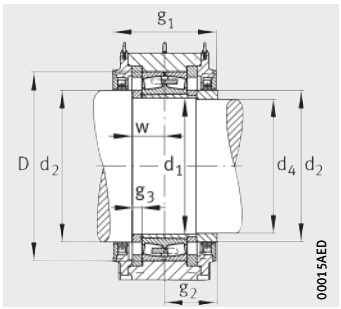

KPG49..-F (unsplit bearing)
Locating bearing

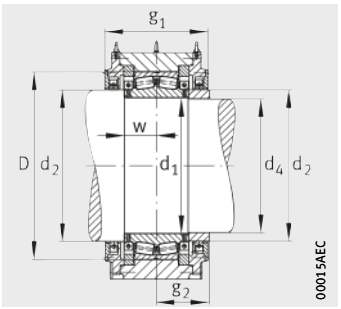

KPG49..-F (split bearing)
Locating bearing

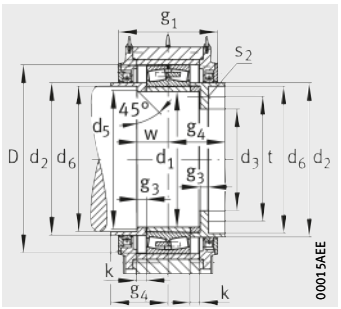

KPG49..-L (unsplit bearing)
Non-locating bearing

	Initial grease filling quantity			Mass m
Split bearing	Locating bearing		Non-locating bearing	Housing
	Unsplit	Split		
	≈kg	≈kg	≈kg	≈kg
Z-529173.PRL	10	8	14	945
Z-528441.PRL	10	8	14	1 050
Z-529223.PRL	13	10	15	1 365
Z-529224.PRL	15	12	20	1 575
Z-529225.PRL	20	15	24	2 205
Z-529226.PRL	22	18	25	2 625
Z-529227.PRL	26	20	30	2 835
Z-527943.PRL	30	24	35	2 940
Z-529228.PRL	35	26	40	3 465
Z-529229.PRL	40	30	50	3 885
Z-529230.PRL	45	35	55	4 515
Z-527254.PRL	55	45	65	5 460
Z-529231.PRL	65	50	80	5 660
Z-529232.PRL	75	60	95	7 140
Z-529233.01.PRL	80	65	100	8 400
Z-529234.PRL	95	75	110	9 450
–	110	–	130	11 550
Z-529215.PRL	125	100	170	13 440

Plummer block housings

KPG, split
For spherical roller bearings with tapered bore and sleeve, for split spherical roller bearings

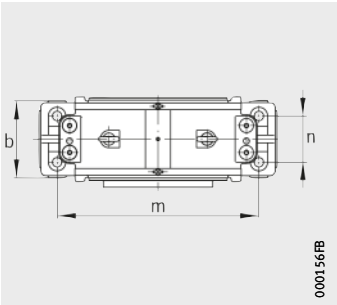

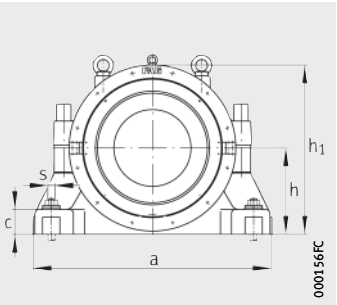

Dimension table (continued) · Dimensions in mm

Designation		Dimensions										
Housing		d_1	a	g_1	h_1	b	c	D	d_2	d_3	d_5	d_6
Locating bearing	Non-locating bearing											
KPG49/470-F-S	**KPG49/470-L-S**	**470**	1 170	400	820	375	130	670	540	375	480	505
KPG49/500-F-S	**KPG49/500-L-S**	**500**	1 240	410	875	400	140	710	570	400	510	535
KPG49/530-F-S	**KPG49/530-L-S**	**530**	1 320	420	930	420	145	750	600	420	540	565
KPG49/570-F-S	**KPG49/570-L-S**	**570**	1 400	460	980	440	155	800	645	450	580	610
KPG49/600-F-S	**KPG49/600-L-S**	**600**	1 500	480	1 040	480	165	850	675	475	612	640
KPG49/630-F-S	**KPG49/630-L-S**	**630**	1 570	500	1 110	500	175	900	720	505	642	675
KPG49/670-F-S	**KPG49/670-L-S**	**670**	1 660	560	1 170	535	185	950	760	535	682	715
KPG49/710-F-S	**KPG49/710-L-S**	**710**	1 750	590	1 240	550	195	1 000	800	565	722	755
KPG49/750-F-S	**KPG49/750-L-S**	**750**	1 850	600	1 310	570	205	1 060	860	600	762	805
KPG49/800-F-S	**KPG49/800-L-S**	**800**	1 960	630	1 390	600	220	1 120	910	640	812	855
KPG49/850-F-S	**KPG49/850-L-S**	**850**	2 060	660	1 450	620	230	1 180	960	675	862	905
KPG49/900-F-S	**KPG49/900-L-S**	**900**	2 200	680	1 550	660	250	1 250	1 015	715	915	960
KPG49/950-F-S	**KPG49/950-L-S**	**950**	2 330	720	1 620	650	255	1 320	1 065	750	965	1 010
KPG49/1000-F-S	**KPG49/1000-L-S**	**1 000**	2 450	780	1 710	740	275	1 400	1 135	795	1 015	1 070
KPG49/1060-F-S	**KPG49/1060-L-S**	**1 060**	2 560	800	1 780	740	285	1 460	1 195	840	1 075	1 130
KPG49/1120-F-S	**KPG49/1120-L-S**	**1 120**	2 700	820	1 880	780	300	1 540	1 260	885	1 135	1 190
KPG49/1180-F-S	**KPG49/1180-L-S**	**1 180**	2 850	850	1 985	820	320	1 630	1 330	940	1 195	1 255
KPG49/1250-F-S	**KPG49/1250-L-S**	**1 250**	3 000	900	2 100	850	340	1 720	1 400	990	1 265	1 325

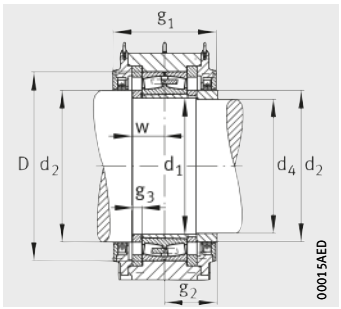

KPG49..-F (unsplit bearing)
Locating bearing

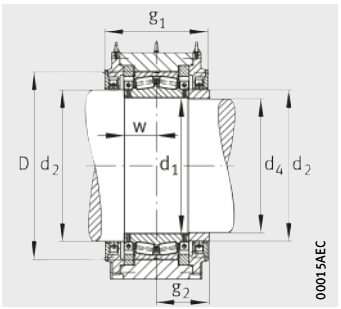

KPG49..-F (split bearing)
Locating bearing

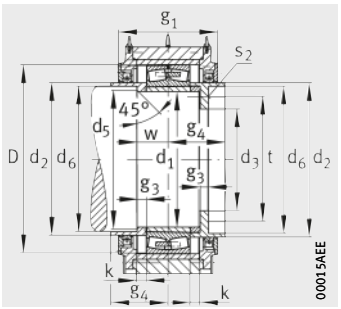

KPG49..-L (unsplit bearing)
Non-locating bearing

g_2	g_3	g_4	h	k	m	n	s	t	s_2		w
									DIN 931	Quantity	
210	40	230	425	40	975	230	M42	437,5	M20X70	8	125
215	40	235	450	40	1 050	240	M42	465	M20X70	8	130
220	40	240	475	40	1 100	255	M48	490	M20X70	8	135
240	45	260	500	40	1 150	270	M52	525	M20X80	8	145
250	46	270	535	40	1 225	295	M56	552,5	M20X80	8	155
260	50	280	570	40	1 300	310	M56	587,5	M24X90	8	165
290	53,5	317,5	600	50	1 375	325	M64	622,5	M24X90	8	175
305	55	332,5	630	50	1 450	335	M64	657,5	M30X100	8	180
310	56	337,5	670	50	1 550	345	M72	700	M30X100	8	185
325	59	352,5	710	50	1 600	360	M72	745	M30X110	8	195
340	60	375	740	60	1 700	370	M80	787,5	M30X110	8	200
350	60	385	800	60	1 820	390	M90	832,5	M36X110	8	210
370	72,5	412,5	830	70	1 980	360	M90	875	M36X130	8	230
400	77,5	435	880	60	2 000	460	M100	927,5	M36X130	8	245
410	77,5	452,5	920	70	2 150	460	M100	980	M42X140	8	245
420	82,5	462,5	970	70	2 300	480	M110	1 032,5	M42X140	8	260
435	87,5	477,5	1 010	70	2 400	510	M110	1 095	M42X150	8	275
460	90	502,5	1 080	70	2 500	520	M125	1 155	M48X180	8	290

Plummer block housings

KPGZ, split
For spherical roller bearings with cylindrical bore, for split spherical roller bearings

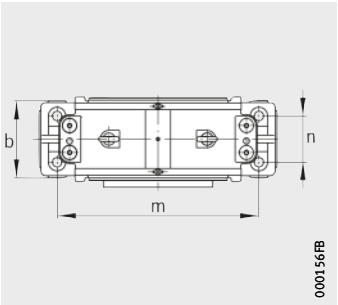

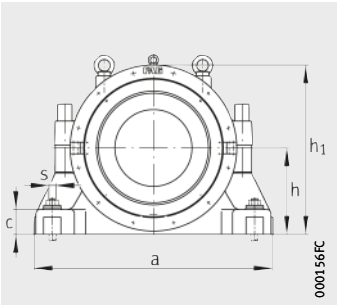

Dimension table · Dimensions in mm

Designation[1)]

Housing		Bearing		
Locating bearing	Non-locating bearing	MB cage	Pin cage	Split
KPGZ49/500-F-S	**KPGZ49/500-L-S**	Z-528741.PRL	Z-541821.249/500	Z-537276.PRL
KPGZ49/530-F-S	**KPGZ49/530-L-S**	Z-528742.PRL	Z-541822.249/530	Z-537277.PRL
KPGZ49/560-F-S	**KPGZ49/560-L-S**	Z-528743.PRL	Z-541823.249/560-B	Z-537278.PRL
KPGZ49/600-F-S	**KPGZ49/600-L-S**	Z-528744.PRL	Z-541824.249/600-B	Z-533761.PRL
KPGZ49/630-F-S	**KPGZ49/630-L-S**	–	Z-541825.249/630	Z-537279.PRL
KPGZ49/670-F-S	**KPGZ49/670-L-S**	Z-528746.PRL	Z-541826.249/670-B	Z-537280.PRL
KPGZ49/710-F-S	**KPGZ49/710-L-S**	Z-528747.PRL	Z-541827.249/710-B	Z-526073.PRL
KPGZ49/750-F-S	**KPGZ49/750-L-S**	Z-528748.PRL	Z-541828.249/750-B	Z-533414.01.PRL
KPGZ49/800-F-S	**KPGZ49/800-L-S**	Z-528749.PRL	Z-541829.249/800-B	Z-532063.PRL
KPGZ49/850-F-S	**KPGZ49/850-L-S**	Z-528750.PRL	Z-541830.249/850-B	Z-537281.PRL
KPGZ49/900-F-S	**KPGZ49/900-L-S**	Z-528751.PRL	Z-541831.249/900-B	Z-537282.PRL
KPGZ49/950-F-S	**KPGZ49/950-L-S**	Z-528752.PRL	Z-541832.249/950-B	Z-534826.PRL
KPGZ49/1000-F-S	**KPGZ49/1000-L-S**	Z-528753.PRL	Z-541833.249/1000-B	Z-533567.PRL
KPGZ49/1060-F-S	**KPGZ49/1060-L-S**	–	Z-541834.249/1060-B	Z-537283.PRL
KPGZ49/1120-F-S	**KPGZ49/1120-L-S**	–	Z-541835.249/1120-B	Z-537284.PRL
KPGZ49/1180-F-S	**KPGZ49/1180-L-S**	–	Z-541836.249/1180-B	Z-536806.PRL
KPGZ49/1250-F-S	**KPGZ49/1250-L-S**	–	Z-541837.249/1250-B	Z-537285.PRL
KPGZ49/1320-F-S	**KPGZ49/1320-L-S**	–	Z-541838.249/1320-B	Z-545161.PRL

1) Ordering example:
Housing KPGZ49/1000-F-S (see also page 912),
split bearing Z-533567.PRL (see bearing tables).

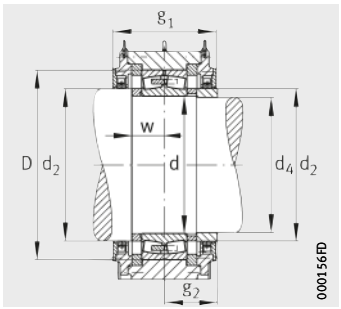

KPGZ49..-F (unsplit bearing)
Locating bearing

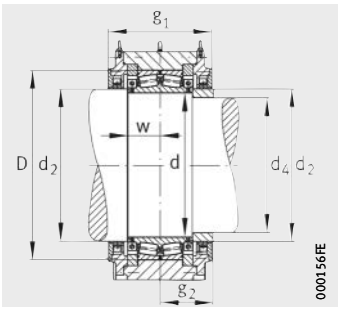

KPGZ49..-F (split bearing)
Locating bearing

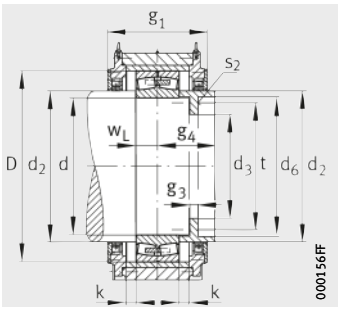

KPGZ49..-L (unsplit bearing)
Non-locating bearing

Initial grease filling quantity			Mass m
Locating bearing		Non-locating bearing	Housing
Unsplit	Split		
≈kg	≈kg	≈kg	≈kg
10	8	14	900
10	8	14	1 000
13	10	15	1 300
15	12	20	1 500
20	15	24	2 100
22	18	25	2 500
26	20	30	2 700
30	24	35	2 800
35	26	40	3 300
40	30	50	3 700
45	35	55	4 300
55	45	65	5 200
65	50	80	5 770
75	60	95	6 800
80	65	100	8 000
95	75	110	9 000
110	85	130	11 000
125	100	170	12 800

Plummer block housings

KPGZ, split
For spherical roller bearings with cylindrical bore, for split spherical roller bearings

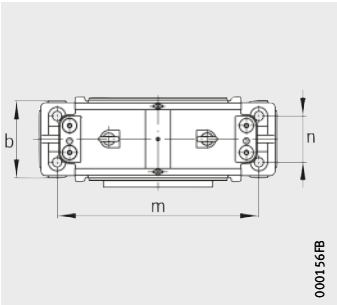

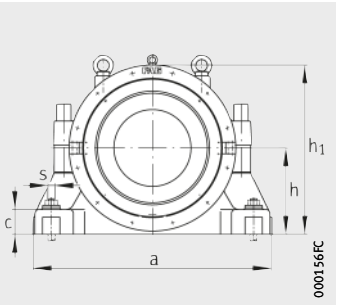

Dimension table (continued) · Dimensions in mm

Designation		Dimensions										
Housing		d	a	g_1	h_1	b	c	D	d_2	d_3	d_4	d_5
Locating bearing	Non-locating bearing											
KPGZ49/500-F-S	**KPGZ49/500-L-S**	**500**	1 170	400	820	375	130	670	540	375	495	510
KPGZ49/530-F-S	**KPGZ49/530-L-S**	**530**	1 240	410	875	400	140	710	570	400	525	540
KPGZ49/560-F-S	**KPGZ49/560-L-S**	**560**	1 320	420	930	420	145	750	600	420	555	570
KPGZ49/600-F-S	**KPGZ49/600-L-S**	**600**	1 400	460	980	440	155	800	645	450	595	610
KPGZ49/630-F-S	**KPGZ49/630-L-S**	**630**	1 500	480	1 040	480	165	850	675	475	625	642
KPGZ49/670-F-S	**KPGZ49/670-L-S**	**670**	1 570	500	1 110	500	175	900	720	505	665	682
KPGZ49/710-F-S	**KPGZ49/710-L-S**	**710**	1 660	560	1 170	535	185	950	760	535	695	722
KPGZ49/750-F-S	**KPGZ49/750-L-S**	**750**	1 750	590	1 240	550	195	1 000	800	565	745	762
KPGZ49/800-F-S	**KPGZ49/800-L-S**	**800**	1 850	600	1 310	570	205	1 060	860	600	795	812
KPGZ49/850-F-S	**KPGZ49/850-L-S**	**850**	1 960	630	1 390	600	220	1 120	910	640	845	862
KPGZ49/900-F-S	**KPGZ49/900-L-S**	**900**	2 060	660	1 450	620	230	1 180	960	675	895	912
KPGZ49/950-F-S	**KPGZ49/950-L-S**	**950**	2 200	680	1 550	660	250	1 250	1 015	715	945	965
KPGZ49/1000-F-S	**KPGZ49/1000-L-S**	**1 000**	2 330	720	1 620	650	255	1 320	1 065	750	985	1 015
KPGZ49/1060-F-S	**KPGZ49/1060-L-S**	**1 060**	2 450	780	1 710	740	275	1 400	1 135	795	1 055	1 075
KPGZ49/1120-F-S	**KPGZ49/1120-L-S**	**1 120**	2 560	800	1 780	740	285	1 460	1 195	840	1 115	1 135
KPGZ49/1180-F-S	**KPGZ49/1180-L-S**	**1 180**	2 700	820	1 880	780	300	1 540	1 260	885	1 175	1 195
KPGZ49/1250-F-S	**KPGZ49/1250-L-S**	**1 250**	2 850	850	1 985	820	320	1 630	1 330	940	1 245	1 265
KPGZ49/1320-F-S	**KPGZ49/1320-L-S**	**1 320**	3 000	900	2 100	850	340	1 720	1 400	990	1 315	1 335

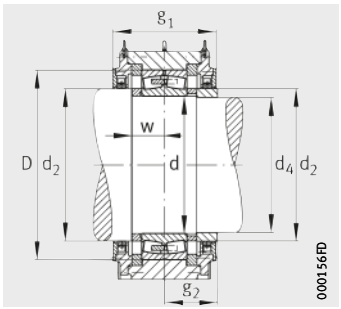

KPGZ49..-F (unsplit bearing)
Locating bearing

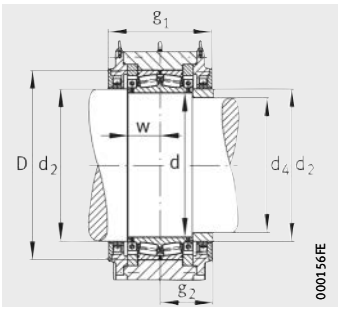

KPGZ49..-F (split bearing)
Locating bearing

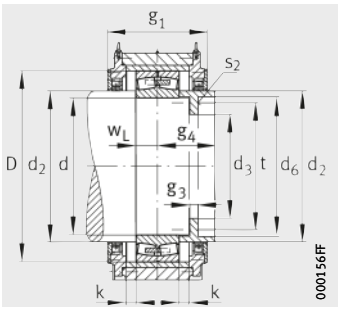

KPGZ49..-L (unsplit bearing)
Non-locating bearing

d_6	g_2	g_3	g_4	h	k	m	n	s	t	s_2		w	w_L
										DIN 931	Quantity		
505	210	40	230	425	40	975	230	M42	437,5	M20X70	8	125	85
535	215	40	235	450	40	1 050	240	M42	465	M20X70	8	130	90
565	220	40	240	475	40	1 100	255	M48	490	M20X70	8	135	95
610	240	45	260	500	40	1 150	270	M52	525	M20X80	8	145	100
640	250	46	270	535	40	1 225	295	M56	552,5	M20X80	8	155	109
675	260	47,5	280	570	40	1 300	310	M56	587,5	M24X90	8	162,5	115
715	290	53,5	317,5	600	50	1 375	325	M64	622,5	M24X90	8	175	121,5
755	305	52,5	332,5	630	50	1 450	335	M64	657,5	M30X100	8	177,5	125
805	310	56	337,5	670	50	1 550	345	M72	700	M30X100	8	185	129
855	325	56,5	352,5	710	50	1 600	360	M72	745	M30X110	8	192,5	136
905	340	55	375	740	60	1 700	370	M80	787,5	M30X110	8	195	140
960	350	55	385	800	60	1 820	390	M90	832,5	M36X110	8	205	150
1 010	370	67,5	412,5	830	70	1 980	360	M90	875	M36X130	8	225	157,5
1 070	400	70	435	880	60	2 000	460	M100	927,5	M36X130	8	237,5	167,5
1 130	410	70	452,5	920	70	2 150	460	M100	980	M42X140	8	237,5	167,5
1 190	420	72,5	462,5	970	70	2 300	480	M110	1 032,5	M42X140	8	250	177,5
1 255	435	85	477,5	1 010	70	2 400	510	M110	1 095	M42X150	8	272,5	187,5
1 325	460	90	502,5	1 080	70	2 500	520	M125	1 155	M48X180	8	290	200

Plummer block housings

LOE, split
For spherical roller bearings with cylindrical bore, oil lubrication

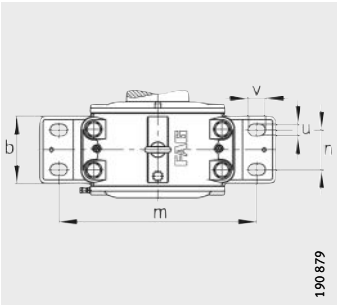

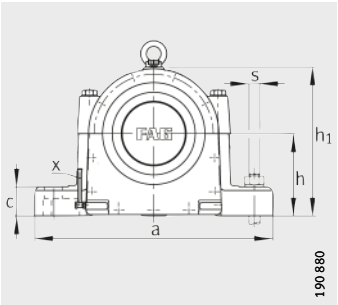

Dimension table · Dimensions in mm

Designation[1]					Initial oil filling quantity	Oil level	Mass m	Dimensions	
Housing		Bearing	Shaft nut	Tab washer		Height x	Housing	d	a
Locating bearing	Non-locating bearing				l	mm	≈kg		
LOE330-N-AF-L	**LOE330-N-AL-L**	22330-E1	KM30	MB30	6,2	75–110	200	**150**	760
LOE330-N-BF-L	**LOE330-N-BL-L**	22330-E1	KM30	MB30	6,2	75–110	200	**150**	760
LOE332-N-AF-L	**LOE332-N-AL-L**	22332-MB	KM32	MB32	7	80–105	240	**160**	820
LOE332-N-BF-L	**LOE332-N-BL-L**	22332-MB	KM32	MB32	7	80–105	240	**160**	820
LOE334-N-AF-L	**LOE334-N-AL-L**	22334-MB	KM34	MB34	7,2	80–105	270	**170**	830
LOE334-N-BF-L	**LOE334-N-BL-L**	22334-MB	KM34	MB34	7,2	80–105	270	**170**	830
LOE236-N-AF-L	**LOE236-N-AL-L**	22236-E1	KM36	MB36	6	75–110	200	**180**	710
LOE236-N-BF-L	**LOE236-N-BL-L**	22236-E1	KM36	MB36	6	75–110	200	**180**	710
LOE336-N-AF-L	**LOE336-N-AL-L**	22336-MB	KM36	MB36	7,4	80–105	330	**180**	840
LOE336-N-BF-L	**LOE336-N-BL-L**	22336-MB	KM36	MB36	7,4	80–105	330	**180**	840
LOE238-N-AF-L	**LOE238-N-AL-L**	22238-MB	KM38	MB38	7,2	70–100	230	**190**	820
LOE238-N-BF-L	**LOE238-N-BL-L**	22238-MB	KM38	MB38	7,2	70–100	230	**190**	820
LOE240-N-AF-L	**LOE240-N-AL-L**	22240-B-MB	KM40	MB40	7,2	75–100	250	**200**	830
LOE240-N-BF-L	**LOE240-N-BL-L**	22240-B-MB	KM40	MB40	7,2	75–100	250	**200**	830
LOE244-N-AF-L	**LOE244-N-AL-L**	22244-B-MB	HM44T	MB44	8,2	80–110	310	**220**	880
LOE244-N-BF-L	**LOE244-N-BL-L**	22244-B-MB	HM44T	MB44	8,2	80–110	310	**220**	880
LOE248-N-AF-L	**LOE248-N-AL-L**	22248-B-MB	HM48T	MB48	8,4	100–120	385	**240**	980
LOE248-N-BF-L	**LOE248-N-BL-L**	22248-B-MB	HM48T	MB48	8,4	100–120	385	**240**	980

1) Ordering example:
Housing LOE238-N-BF-L (see also page 913), bearing 22238-MB (see bearing tables), locknut KM38, tab washer MB38 (see dimension tables).

2) ① Locating bearing AF
② Non-locating bearing AL
③ Locating bearing BF
④ Non-locating bearing BL

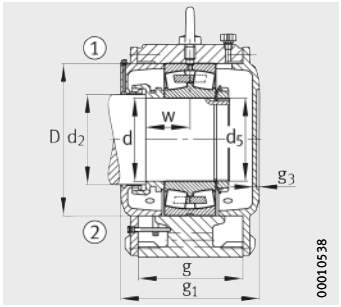

Design A
①, ② [2)]

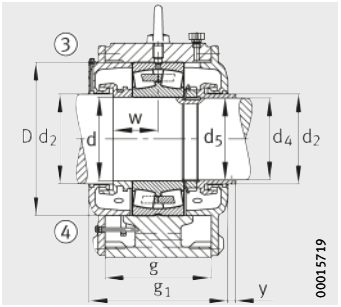

Design B
③, ④ [2)]

g_1	h_1	d_2	d_4	d_5	w	b	c	D	g	g_3	h	k	m	n	u	v	s	y
335	465	160	–	M150X2	95	200	85	320	240	18	265	10	630	125	42	60	M36	–
335	465	160	147	M150X2	95	200	85	320	240	–	265	10	630	125	42	60	M36	15
350	485	166	–	M160X3	100	240	90	340	250	20	270	10	670	130	48	70	M42	–
350	485	166	155	M160X3	100	240	90	340	250	–	270	10	670	130	48	70	M42	15
350	510	180	–	M170X3	105	240	90	360	255	18	280	10	670	130	48	70	M42	–
350	510	180	165	M170X3	105	240	90	360	255	–	280	10	670	130	48	70	M42	15
300	465	190	–	M180X3	90	200	85	320	210	20	260	10	580	110	42	60	M36	–
300	465	190	175	M180X3	90	200	85	320	210	–	260	10	580	110	42	60	M36	22
360	530	190	–	M180X3	108	240	90	380	260	20	290	10	680	130	48	70	M42	–
360	530	190	175	M180X3	108	240	90	380	260	–	290	10	680	130	48	70	M42	15
350	485	196	–	M190X3	95	240	90	340	250	20	270	10	670	130	48	70	M42	–
350	485	196	185	M190X3	95	240	90	340	250	–	270	10	670	130	48	70	M42	15
344	510	210	–	M200X3	100	240	90	360	260	20	280	10	670	130	48	70	M42	–
344	510	210	195	M200X3	100	240	90	360	260	–	280	10	670	130	48	70	M42	15
380	565	230	–	Tr220X4	108	240	105	400	280	20	310	10	720	130	48	70	M42	–
380	565	230	212	Tr220X4	108	240	105	400	280	–	310	10	720	130	48	70	M42	15
400	615	260	–	Tr240X4	120	280	120	440	300	20	340	10	820	165	48	70	M42	–
400	615	260	235	Tr240X4	120	280	120	440	300	–	340	10	820	165	48	70	M42	22

Plummer block housings

LOE, split
For spherical roller bearings
with tapered bore
and adapter sleeve,
oil lubrication

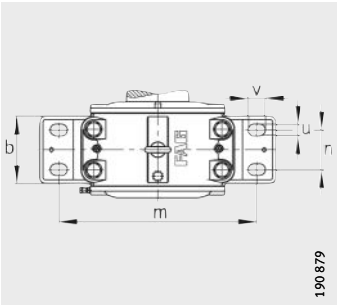

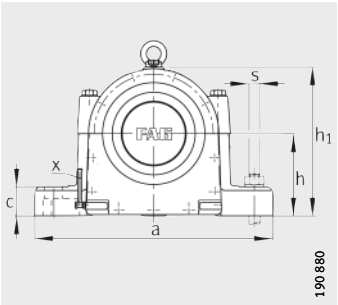

Dimension table · Dimensions in mm

Designation[1]		Bearing	Adapter sleeve	Initial oil filling quantity	Oil level	Mass m
Housing					Height x	Housing
Locating bearing	Non-locating bearing			l	mm	≈kg
LOE630-N-AF-L	**LOE630-N-AL-L**	22330-E1-K	H2330	6,2	75–110	200
LOE630-N-BF-L	**LOE630-N-BL-L**	22330-E1-K	H2330	6,2	75–110	200
LOE632-N-AF-L	**LOE632-N-AL-L**	22332-K-MB	H2332	7	80–105	240
LOE632-N-BF-L	**LOE632-N-BL-L**	22332-K-MB	H2332	7	80–105	240
LOE634-N-AF-L	**LOE634-N-AL-L**	22334-K-MB	H2334	7,2	80–105	270
LOE634-N-BF-L	**LOE634-N-BL-L**	22334-K-MB	H2334	7,2	80–105	270
LOE536-N-AF-L	**LOE536-N-AL-L**	22236-E1-K	H3136	6	75–110	200
LOE536-N-BF-L	**LOE536-N-BL-L**	22236-E1-K	H3136	6	75–110	200
LOE636-N-AF-L	**LOE636-N-AL-L**	22336-K-MB	H2336	7,4	80–105	330
LOE636-N-BF-L	**LOE636-N-BL-L**	22336-K-MB	H2336	7,4	80–105	330
LOE538-N-AF-L	**LOE538-N-AL-L**	22238-K-MB	H3138	7,2	70–100	230
LOE538-N-BF-L	**LOE538-N-BL-L**	22238-K-MB	H3138	7,2	70–100	230
LOE540-N-AF-L	**LOE540-N-AL-L**	22240-B-K-MB	H3140	7,2	75–100	250
LOE540-N-BF-L	**LOE540-N-BL-L**	22240-B-K-MB	H3140	7,2	75–100	250
LOE544-N-AF-L	**LOE544-N-AL-L**	22244-B-K-MB	H3144X	8,2	80–110	310
LOE544-N-BF-L	**LOE544-N-BL-L**	22244-B-K-MB	H3144X	8,2	80–110	310
LOE548-N-AF-L	**LOE548-N-AL-L**	22248-B-K-MB	H3148X	8,4	100–120	385
LOE548-N-BF-L	**LOE548-N-BL-L**	22248-B-K-MB	H3148X	8,4	100–120	385

1) Ordering example:
Housing LOE538-N-BF-L (see also page 915), bearing 22238-K-MB (see bearing tables),
adapter sleeve H3138 (see dimension tables).

2) ① Locating bearing AF
② Non-locating bearing AL
③ Locating bearing BF
④ Non-locating bearing BL

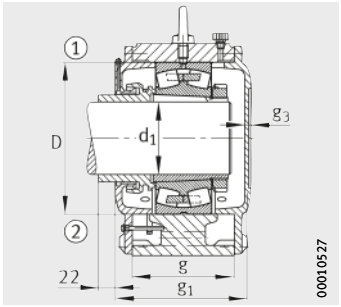

Design A
①, ② [2)]

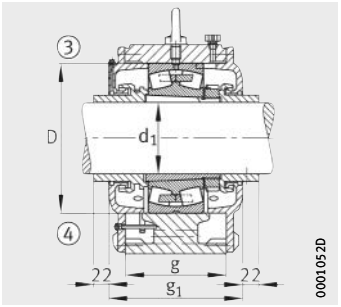

Design B
③, ④ [2)]

Dimensions

d_1	a	g_1	h_1	b	c	D	g	g_3	h	k	m	n	u	v	s
135	760	335	465	200	85	320	240	18	265	10	630	125	42	60	M36
135	760	335	465	200	85	320	240	–	265	10	630	125	42	60	M36
140	820	350	485	240	90	340	250	20	270	10	670	130	48	70	M42
140	820	350	485	240	90	340	250	–	270	10	670	130	48	70	M42
150	830	350	510	240	90	360	255	18	280	10	670	130	48	70	M42
150	830	350	510	240	90	360	255	–	280	10	670	130	48	70	M42
160	710	300	465	200	85	320	210	20	260	10	580	110	42	60	M36
160	710	300	465	200	85	320	210	–	260	10	580	110	42	60	M36
160	840	360	530	240	90	380	260	20	290	10	680	130	48	70	M42
160	840	360	530	240	90	380	260	–	290	10	680	130	48	70	M42
170	820	350	485	240	90	340	250	20	270	10	670	130	48	70	M42
170	820	350	485	240	90	340	250	–	270	10	670	130	48	70	M42
180	830	344	510	240	90	360	260	20	280	10	670	130	48	70	M42
180	830	344	510	240	90	360	260	–	280	10	670	130	48	70	M42
200	880	380	565	240	105	400	280	20	310	10	720	130	48	70	M42
200	880	380	565	240	105	400	280	–	310	10	720	130	48	70	M42
220	980	400	625	280	120	440	300	20	340	10	820	165	48	70	M42
220	980	400	625	280	120	440	300	–	340	10	820	165	48	70	M42

Plummer block housings

LOU, split
For spherical roller bearings with cylindrical bore, recirculating oil lubrication

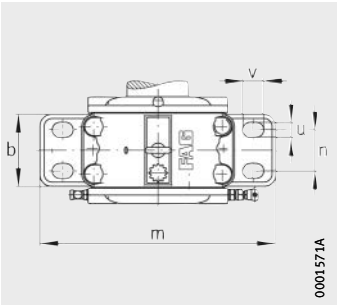

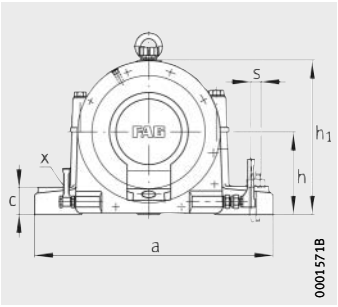

Dimension table · Dimensions in mm

Designation[1]					Oil level	Mass m	Dimensions					
Housing		Bearing	Shaft nut	Tab washer	Height x mm	Housing ≈kg	d	a	g_1	h_1	d_2	d_4
Locating bearing	Non-locating bearing											
LOU330-AF-L	**LOU330-AL-L**	22330-E1	KM30	MB30	135	200	**150**	760	335	465	160	–
LOU330-BF-L	**LOU330-BL-L**	22330-E1	KM30	MB30	135	200	**150**	760	–	465	160	147
LOU332-AF-L	**LOU332-AL-L**	22332-MB	KM32	MB32	133	240	**160**	820	350	485	166	–
LOU332-BF-L	**LOU332-BL-L**	22332-MB	KM32	MB32	133	240	**160**	820	–	485	166	155
LOU334-AF-L	**LOU334-AL-L**	22334-MB	KM34	MB34	133	270	**170**	830	350	510	180	–
LOU334-BF-L	**LOU334-BL-L**	22334-MB	KM34	MB34	133	270	**170**	830	–	510	180	165
LOU236-AF-L	**LOU236-AL-L**	22236-E1	KM36	MB36	125	200	**180**	710	300	465	190	–
LOU236-BF-L	**LOU236-BL-L**	22236-E1	KM36	MB36	125	200	**180**	710	–	465	190	175
LOU336-AF-L	**LOU336-AL-L**	22336-MB	KM36	MB36	133	330	**180**	840	360	530	190	–
LOU336-BF-L	**LOU336-BL-L**	22336-MB	KM36	MB36	133	330	**180**	840	–	530	190	175
LOU238-AF-L	**LOU238-AL-L**	22238-MB	KM38	MB38	127	230	**190**	820	350	485	196	–
LOU238-BF-L	**LOU238-BL-L**	22238-MB	KM38	MB38	127	230	**190**	820	–	485	196	185
LOU240-AF-L	**LOU240-AL-L**	22240-B-MB	KM40	MB40	130	250	**200**	830	360	510	210	–
LOU240-BF-L	**LOU240-BL-L**	22240-B-MB	KM40	MB40	130	250	**200**	830	–	510	210	195
LOU244-AF-L	**LOU244-AL-L**	22244-B-MB	HM44T	MB44	145	310	**220**	880	380	565	230	–
LOU244-BF-L	**LOU244-BL-L**	22244-B-MB	HM44T	MB44	145	310	**220**	880	–	565	230	212
LOU248-AF-L	**LOU248-AL-L**	22248-B-MB	HM48T	MB48	155	385	**240**	980	400	615	260	–
LOU248-BF-L	**LOU248-BL-L**	22248-B-MB	HM48T	MB48	155	385	**240**	980	–	615	260	235

1) Ordering example:
Housing LOU238-BF-L (see also page 914), bearing 22238-MB (see bearing tables), locknut KM38, tab washer MB38 (see dimension tables).

2) ① Locating bearing AF
② Non-locating bearing AL
③ Locating bearing BF
④ Non-locating bearing BL

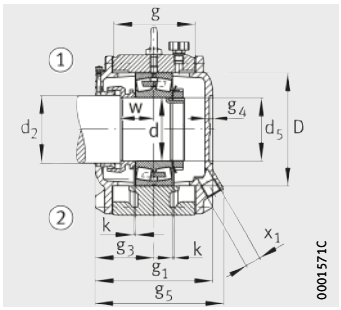

Design A
①, ② [2)]

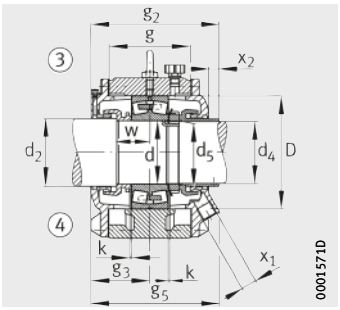

Design B
③, ④ [2)]

d_5	w	b	c	D	g	g_2	g_3	g_4	g_5	h	k	m	n	u	v	s	x_1 Inch size thread	x_2
M150X2	95	200	85	320	240	–	168	18	–	265	10	630	125	42	60	M36	G11/4	–
M150X2	95	200	85	320	240	350	168	–	–	265	10	630	125	42	60	M36	G11/4	15
M160X3	100	240	90	340	250	–	175	20	395	270	10	670	130	48	70	M42	G11/4	–
M160X3	100	240	90	340	250	365	175	–	395	270	10	670	130	48	70	M42	G11/4	15
M170X3	105	240	90	360	255	–	175	18	–	280	10	670	130	48	70	M42	G11/4	–
M170X3	105	240	90	360	255	365	175	–	–	280	10	670	130	48	70	M42	G11/4	15
M180X3	90	200	85	320	210	–	150	20	325	260	10	580	110	42	60	M36	G11/4	–
M180X3	90	200	85	320	210	315	150	–	325	260	10	580	110	42	60	M36	G11/4	15
M180X3	108	240	90	380	260	–	180	20	–	290	10	680	130	48	70	M42	G11/4	–
M180X3	108	240	90	380	260	375	180	–	–	290	10	680	130	48	70	M42	G11/4	15
M190X3	95	240	90	340	250	–	175	20	383	270	10	670	130	48	70	M42	G11/4	–
M190X3	95	240	90	340	250	365	175	–	383	270	10	670	130	48	70	M42	G11/4	15
M200X3	100	240	90	360	260	–	180	20	389	280	10	670	130	48	70	M42	G11/4	–
M200X3	100	240	90	360	260	375	180	–	389	280	10	670	130	48	70	M42	G11/4	15
Tr220X4	108	240	105	400	280	–	190	20	405	310	10	720	130	48	70	M42	G11/4	–
Tr220X4	108	240	105	400	280	395	190	–	405	310	10	720	130	48	70	M42	G11/4	15
Tr240X4	120	280	120	440	300	–	200	20	428	340	10	820	165	48	70	M42	G11/4	–
Tr240X4	120	280	120	440	300	415	200	–	428	340	10	820	165	48	70	M42	G11/4	15

Plummer block housings

LOU, split
For spherical roller bearings with tapered bore and adapter sleeve, recirculating oil lubrication

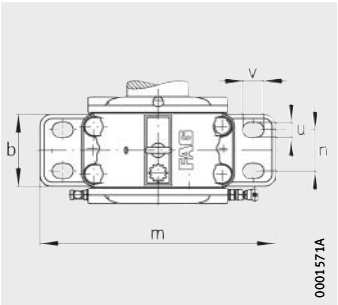

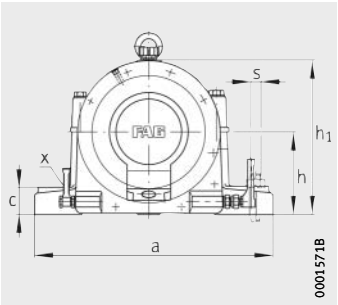

Dimension table · Dimensions in mm

Designation[1]				Oil level	Mass m	Dimensions			
Housing		Bearing	Adapter sleeve	Height x	Housing	d_1	a	g_1	h_1
Locating bearing	Non-locating bearing			mm	≈kg				
LOU630-AF-L	**LOU630-AL-L**	22330-E1-K	H2330	135	200	**135**	760	335	465
LOU630-BF-L	**LOU630-BL-L**	22330-E1-K	H2330	135	200	**135**	760	–	465
LOU632-AF-L	**LOU632-AL-L**	22332-K-MB	H2332	133	240	**140**	820	350	485
LOU632-BF-L	**LOU632-BL-L**	22332-K-MB	H2332	133	240	**140**	820	–	485
LOU634-AF-L	**LOU634-AL-L**	22334-K-MB	H2334	133	270	**150**	830	350	510
LOU634-BF-L	**LOU634-BL-L**	22334-K-MB	H2334	133	270	**150**	830	–	510
LOU536-AF-L	**LOU536-AL-L**	22236-E1-K	H3136	125	200	**160**	710	300	465
LOU536-BF-L	**LOU536-BL-L**	22236-E1-K	H3136	125	200	**160**	710	–	465
LOU636-AF-L	**LOU636-AL-L**	22336-K-MB	H2336	133	330	**160**	840	360	530
LOU636-BF-L	**LOU636-BL-L**	22336-K-MB	H2336	133	330	**160**	840	–	530
LOU538-AF-L	**LOU538-AL-L**	22238-K-MB	H3138	127	230	**170**	820	350	485
LOU538-BF-L	**LOU538-BL-L**	22238-K-MB	H3138	127	230	**170**	820	–	485
LOU540-AF-L	**LOU540-AL-L**	22240-B-K-MB	H3140	130	250	**180**	830	360	510
LOU540-BF-L	**LOU540-BL-L**	22240-B-K-MB	H3140	130	250	**180**	830	–	510
LOU544-AF-L	**LOU544-AL-L**	22244-B-K-MB	H3144X	145	310	**200**	880	380	565
LOU544-BF-L	**LOU544-BL-L**	22244-B-K-MB	H3144X	145	310	**200**	880	–	565
LOU548-AF-L	**LOU548-AL-L**	22248-B-K-MB	H3148X	155	385	**220**	980	400	625
LOU548-BF-L	**LOU548-BL-L**	22248-B-K-MB	H3148X	155	385	**220**	980	–	625

1) Ordering example:
Housing LOU538-BF-L (see also page 916), bearing 22238-K-MB (see bearing tables), adapter sleeve H3138 (see dimension tables).

2) ① Locating bearing AF
② Non-locating bearing AL
③ Locating bearing BF
④ Non-locating bearing BL

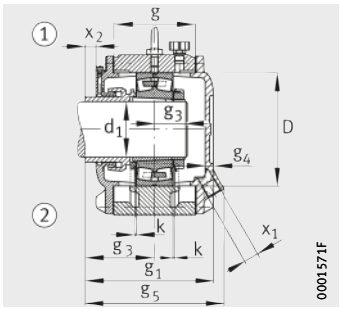

Design A
①, ② 2)

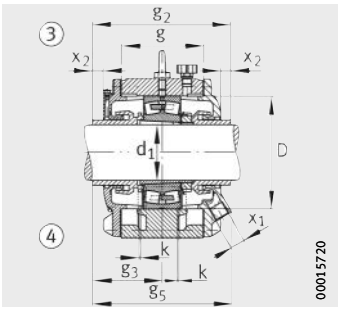

Design B
③, ④ 2)

b	c	D	g	g_2	g_3	g_4	g_5	h	k	m	n	u	v	s	x_1 Inch size thread	x_2
200	85	320	240	–	168	18	–	265	10	630	125	42	60	M36	G11/4	15
200	85	320	240	350	168	–	–	265	10	630	125	42	60	M36	G11/4	15
240	90	340	250	–	175	20	395	270	10	670	130	48	70	M42	G11/4	15
240	90	340	250	365	175	–	395	270	10	670	130	48	70	M42	G11/4	15
240	90	360	255	–	175	18	–	280	10	670	130	48	70	M42	G11/4	15
240	90	360	255	365	175	–	–	280	10	670	130	48	70	M42	G11/4	15
200	85	320	210	–	150	20	325	260	10	580	110	42	60	M36	G11/4	15
200	85	320	210	315	150	–	325	260	10	580	110	42	60	M36	G11/4	15
240	90	380	260	–	180	20	–	290	10	680	130	48	70	M42	G11/4	15
240	90	380	260	375	180	–	–	290	10	680	130	48	70	M42	G11/4	15
240	90	340	250	–	175	20	383	270	10	670	130	48	70	M42	G11/4	15
240	90	340	250	365	175	–	383	270	10	670	130	48	70	M42	G11/4	15
240	90	360	260	–	180	20	389	280	10	670	130	48	70	M42	G11/4	15
240	90	360	260	375	180	–	389	280	10	670	130	48	70	M42	G11/4	15
240	105	400	280	–	190	20	405	310	10	720	130	48	70	M42	G11/4	15
240	105	400	280	395	190	–	405	310	10	720	130	48	70	M42	G11/4	15
280	120	440	300	–	200	20	428	340	10	820	165	48	70	M42	G11/4	15
280	120	440	300	415	200	–	428	340	10	820	165	48	70	M42	G11/4	15

Plummer block housings

PM30, split
For spherical roller bearings
with tapered bore
and adapter sleeve,
for direct bearing seat

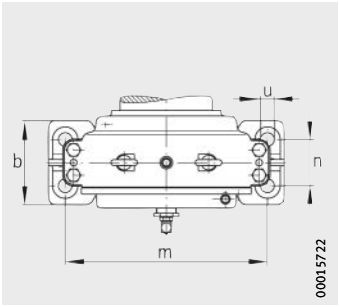

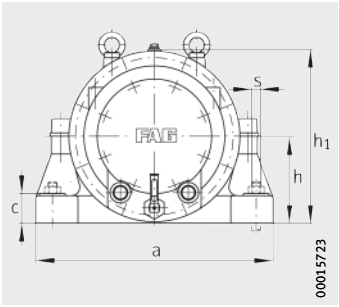

①, ②, ③, ④ [4)]

Dimension table · Dimensions in mm

Designation[1)]			Mass m	Dimensions					
Housing	Bearing	Adapter sleeve	Housing ≈kg	d_1	d_2	d_3	d_4	d_5	a
PM3044	23044-	H3044X	105	**200**	228	212	200	Tr220X4	560
PM3048	23048-	H3048	120	**220**	248	236	220	Tr240X4	580
PM3052	23052-	H3052X	145	**240**	269	256	240	Tr260X4	620
PM3056	23056-	H3056	170	**260**	289	276	260	Tr280X4	660
PM3060	23060-	H3060	200	**280**	310	300	280	Tr300X4	700
PM3064	23064-	H3064	220	**300**	330	320	300	Tr320X5	730
PM3068	23068-	H3068	290	**320**	352	340	320	Tr340X5	800
PM3072	23072-	H3072	300	**340**	372	360	340	Tr360X5	830
PM3076	23076-	H3076	330	**360**	392	380	360	Tr380X5	860
PM3080	23080-	H3080	445	**380**	413	400	380	Tr400X5	920
PM3084	23084-	H3084X	550	**400**	433	420	400	Tr420X5	950
PM3088	23088-	H3088	645	**410**	454	430	410	Tr440X5	1 000
PM3092	23092-	H3092	700	**430**	474	450	430	Tr460X5	1 050
PM3096	23096-	H3096	820	**450**	494	470	450	Tr480X5	1 080
PM30/500	230/500-	H30/500	900	**470**	514	490	470	Tr500X5	1 100
PM30/530	230/530-	H30/530	1 100	**500**	546	524	500	Tr530X6	1 200
PM30/560	230/560-	H30/560	1 250	**530**	577	554	530	Tr560X6	1 300
PM30/600	230/600-	H30/600	1 400	**560**	617	584	560	Tr600X6	1 400
PM30/630	230/630-	H30/630	1 780	**600**	648	624	600	Tr630X6	1 440
PM30/670	230/670-	H30/670	1 900	**630**	690	654	630	Tr670X6	1 470
PM30/710	230/710-	H30/710	2 000	**670**	730	694	670	Tr710X6	1 500

1) Ordering example:
Housing PM30/500-H-AL-L (see also page 917), bearing 230/500-B-K-MB (see bearing tables),
adapter sleeve H30/500-HG (see dimension tables).

2) With adapter sleeve.

3) Direct bearing seat.

4) ① Locating bearing AF
② Non-locating bearing AL
③ Locating bearing BF
④ Non-locating bearing BL

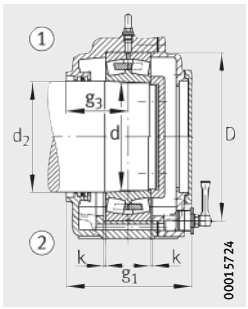

Design A
for direct bearing seat

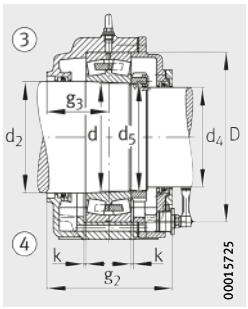

Design B
for direct bearing seat

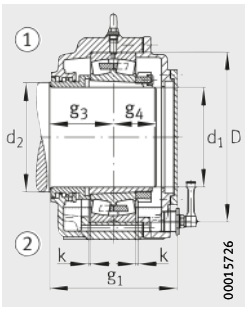

Design A
with adapter sleeve

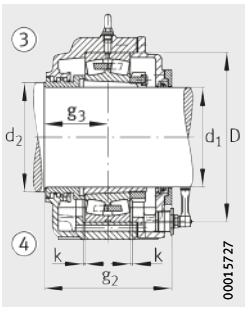

Design B
with adapter sleeve

g_1 [2]	g_1 [3]	h_1	b	c	D	g_2 [2]	g_2 [3]	g_3 [2]	g_3 [3]	g_4	h	k	m	n	u	s
255	253	410	200	70	340	255	253	127	125	118	205	6	480	110	28	M24
280	270	427,5	200	70	360	280	270	140	130	130	215	6	490	110	35	M30
300	298	475	240	80	400	300	298	150	148	140	240	6	530	150	35	M30
310	300	500	240	85	420	310	300	155	145	145	250	6	570	150	42	M36
345	335	540	260	90	460	345	335	170	160	165	270	8	600	160	42	M36
355	345	560	270	90	480	355	345	175	165	170	280	8	630	165	42	M36
390	380	608	300	95	520	390	380	190	180	190	305	10	690	190	42	M36
395	385	628	310	95	540	395	385	195	185	190	315	10	720	200	42	M36
400	390	643	320	95	560	400	390	200	190	190	325	10	750	210	42	M36
422	412	695	340	100	600	422	412	210	200	202	350	10	790	220	49	M42
430	420	720	350	100	620	430	420	215	205	205	360	10	820	230	49	M42
455	445	760	370	100	650	455	445	225	215	220	380	10	860	240	49	M42
465	455	785	390	110	680	465	455	230	220	225	395	11	900	250	56	M48
475	465	805	400	110	700	475	465	235	225	230	405	11	930	260	56	M48
485	475	825	410	110	720	485	475	240	230	235	415	11	950	270	56	M48
530	520	895	450	120	780	530	520	260	250	260	450	12	1 040	290	56	M48
585	565	960	440	140	820	585	565	270	250	305	485	12	1 080	280	56	M48
610	585	1 020	460	140	870	610	585	290	265	310	515	12	1 200	300	56	M48
615	590	1 075	480	160	920	615	590	290	265	315	540	14	1 260	320	56	M48
675	660	1 135	500	170	980	675	660	320	305	345	570	14	1 280	320	56	M48
720	700	1 190	520	180	1 030	720	700	340	320	370	600	14	1 300	320	56	M48

Plummer block housings

RA, split
For spherical roller bearings
with cylindrical bore,
with tapered bore
and withdrawal sleeve

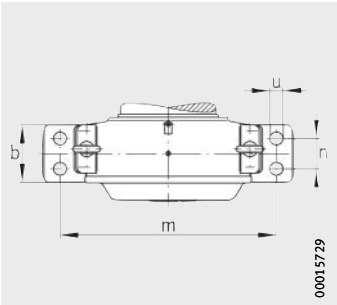

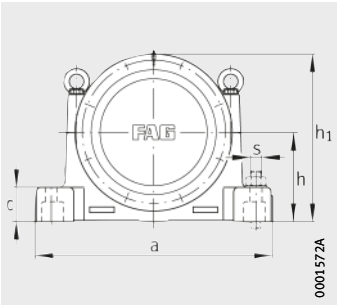

①, ②, ③, ④ [2)]

Dimension table · Dimensions in mm

Designation[1)]			Mass m	Dimensions					
Housing	Bearing	Withdrawal sleeve	Housing ≈kg	d	d_1	d_2	d_3 min.	d_4	a
RA3044	23044-	AH3044	110	**220**	200	222	228	218	600
RA3948	23948-	AH3948	85	**240**	220	242	250	238	580
RA3048	23048-	AH3048	130	**240**	220	242	250	238	670
RA3952	23952-	AH3952	100	**260**	240	262	270	258	670
RA3052	23052-	AH3052	160	**260**	240	262	270	258	710
RA3956	23956-	AH3956	110	**280**	260	282	292	278	670
RA3056	23056-	AH3056	180	**280**	260	282	292	278	730
RA3960	23960-	AH3960	145	**300**	280	302	312	298	730
RA3060	23060-	AH3060	270	**300**	280	302	312	298	825
RA3964	23964-	AH3964	150	**320**	300	322	334	318	730
RA3064	23064-	AH3064	320	**320**	300	322	334	318	855
RA3968	23968-	AH3968	230	**340**	320	342	354	338	825
RA3068	23068-	AH3068	350	**340**	320	342	354	338	900
RA3972	23972-	AH3972	260	**360**	340	362	374	358	855
RA3072	23072-	AH3072	380	**360**	340	362	374	358	970
RA3976	23976-	AH3976	310	**380**	360	382	394	378	900
RA3076	23076-	AH3076	410	**380**	360	382	396	378	1 000
RA3980	23980-	AH3980	350	**400**	380	402	416	398	970
RA3080	23080-	AH3080	470	**400**	380	402	416	398	1 060
RA3984	23984-	AH3984	400	**420**	400	422	436	418	1 000
RA3084	23084-	AH3084	520	**420**	400	422	436	418	1 130
RA3988	23988-	AH3988	410	**440**	420	442	456	438	1 060
RA3088	23088-	AHX3088	620	**440**	420	442	456	438	1 160
RA3992	23992-	AH3992	520	**460**	440	462	476	458	1 130
RA3092	23092-	AHX3092	650	**460**	440	462	476	458	1 250
RA3996	23996-	AH3996	610	**480**	460	482	496	478	1 160
RA3096	23096-	AHX3096	670	**480**	460	482	496	478	1 260
RA39/500	239/500-	AH39/500	610	**500**	480	502	516	498	1 160
RA30/500	230/500-	AHX30/500	700	**500**	480	502	516	498	1 280

1) Ordering example:
Housing RA3072-Z-AF-L (see also page 919), bearing 23072-MB (see bearing tables).

2) ① Locating bearing AF
② Non-locating bearing AL
③ Locating bearing BF
④ Non-locating bearing BL

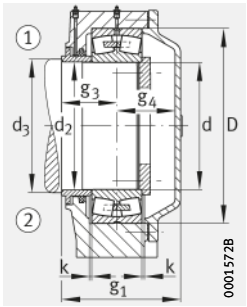

Design A

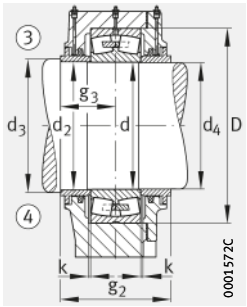

Design B

For bearings with cylindrical bore

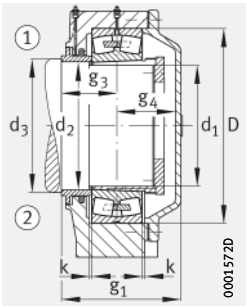

Design A

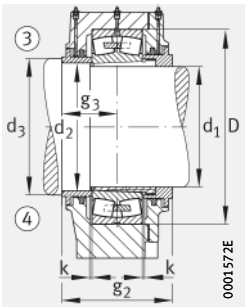

Design B

For bearings with tapered bore and withdrawal sleeve

g_1	h_1	b	D	c	g_2	g_3	g_4 min.	h	k	m	n	u	s
225	430	150	340	90	204	102	111	230	4	520	80	28	M24
190	395	140	320	95	170	85	93	210	4	490	70	28	M24
240	450	160	360	95	220	110	118	240	4	560	80	35	M30
220	450	160	360	95	200	100	108	240	5	560	80	35	M30
255	510	160	400	108	226	113	130	270	5	620	80	35	M30
225	465	160	380	95	200	100	113	240	5	560	240	35	M30
260	525	165	420	115	232	116	132	280	5	635	80	35	M30
240	525	165	420	115	216	108	120	280	5	635	80	35	M30
280	580	190	460	120	260	130	136	310	5	710	100	42	M36
240	535	165	440	115	216	108	120	280	5	635	80	35	M30
285	600	200	480	130	270	135	138	320	5	735	105	42	M36
240	575	190	460	120	220	110	118	310	5	710	100	42	M36
310	650	210	520	140	280	140	158	350	5	780	110	42	M36
240	595	200	480	130	220	110	118	320	5	735	105	42	M36
318	672	220	540	145	290	145	161	360	5	840	110	48	M42
275	650	210	520	140	250	125	138	350	6	780	110	42	M36
330	695	230	560	150	300	150	168	370	6	870	110	48	M42
275	370	220	540	145	250	125	138	360	6	840	110	48	M42
335	750	240	600	160	300	150	173	400	6	920	120	56	M48
275	690	230	560	150	250	125	138	370	6	870	110	48	M42
360	770	240	620	165	300	150	195	410	6	960	120	56	M48
315	745	240	600	160	270	135	168	400	7	920	120	56	M48
375	810	260	650	170	324	162	198	430	7	1 000	120	56	M48
315	765	240	620	162	270	135	165	410	7	960	120	56	M48
400	850	280	680	180	348	174	211	450	7	1 070	130	66	M56
335	815	260	650	170	300	150	170	430	7	1 000	130	56	M48
405	870	290	700	185	358	179	211	460	7	1 080	140	66	M56
335	815	260	670	170	300	150	170	430	7	1 000	130	56	M48
420	880	290	720	190	358	179	226	460	7	1 100	140	66	M56

Plummer block housings

RLE, split
For spherical roller bearings
with cylindrical bore,
with tapered bore
and withdrawal sleeve

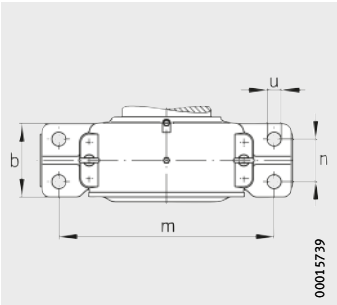

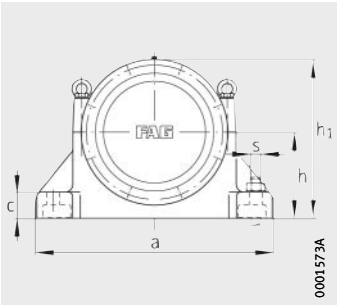

①, ②, ③, ④ [2)]

Dimension table · Dimensions in mm

Designation[1)]			Mass m	Dimensions						
Housing	Bearing	Withdrawal sleeve	Housing ≈kg	d	d_1	d_2	d_3 min.	d_4	a	g_1
RLE4138	24138-	AH24138	115	**190**	180	192	198	175	600	230
RLE4140	24140-	AH24140	145	**200**	190	202	212	185	690	250
RLE4144	24144-	AH24144	175	**220**	200	222	232	195	720	265
RLE4148	24148-	AH24148	220	**240**	220	242	252	215	770	275
RLE4152	24152-	AH24152	295	**260**	240	262	272	235	860	305
RLE4156	24156-	AH24156	320	**280**	260	282	292	255	880	305
RLE4160	24160-	AH24160	415	**300**	280	302	315	275	940	335
RLE4164	24164-	AH24164	550	**320**	300	322	335	295	1 060	365
RLE4168	24168-	AH24168	685	**340**	320	342	355	315	1 110	400
RLE4172	24172-	AH24172	765	**360**	340	362	375	335	1 190	400
RLE4176	24176-	AH24176	775	**380**	360	382	395	355	1 190	400
RLE4180	24180-	AH24180	870	**400**	380	402	415	375	1 230	410
RLE4184	24184-	AH24184	1 100	**420**	400	422	435	395	1 300	450
RLE4188	24188-	AH24188	1 150	**440**	420	442	455	415	1 370	450
RLE4192	24192-	AH24192	1 400	**460**	440	462	475	435	1 500	485
RLE4196	24196-	AH24196	1 550	**480**	460	482	495	455	1 530	500
RLE41/500	241/500-	AH241/500	1 600	**500**	480	502	515	475	1 580	515

1) Ordering example:
Housing RLE4180-AH-BL-L (see also page 922), bearing 24180-B-K30 (see bearing tables),
withdrawal sleeve AH24180-H (see dimension tables).

2) ① Locating bearing AF
② Non-locating bearing AL
③ Locating bearing BF
④ Non-locating bearing BL

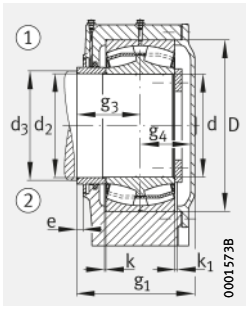

Design A

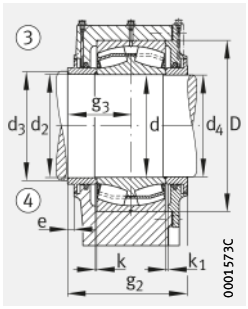

Design B

For bearings with cylindrical bore

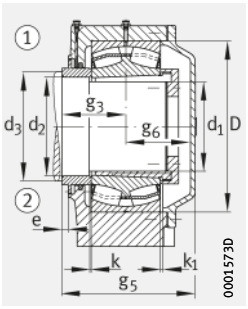

Design A

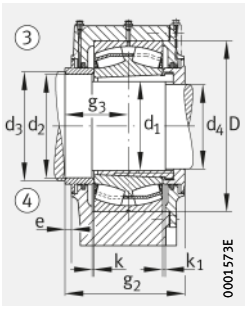

Design B

For bearings with tapered bore and withdrawal sleeve

h_1	b	c	D	e	g_2	g_3	g_4 min.	g_5	g_6 min.	h	k	k_1	m	n	u	s
412	180	70	320	15	240	127	95	272	137	225	1	4	510	100	36	M30
442	195	75	340	15	260	137	105	287	142	240	1	4	580	105	42	M36
477	210	80	370	15	270	142	113	307	155	260	1	4	610	120	42	M36
517	225	85	400	15	280	148	117	323	165	280	1	5	655	130	42	M36
567	250	95	440	15	315	165	130	350	175	310	1	5	730	140	49	M42
587	250	100	460	15	315	165	130	350	175	320	2	5	750	145	49	M42
642	280	110	500	15	335	176	147	386	198	350	2	5	800	165	49	M42
697	305	120	540	20	370	196	157	421	213	380	2	5	900	170	56	M48
752	340	130	580	20	405	210	178	480	258	410	2	5	940	195	56	M48
792	340	135	600	20	405	210	178	480	258	430	2	5	1 010	195	56	M48
792	340	140	620	20	405	210	175	490	265	430	2	5	1 010	195	68	M56
827	350	145	650	20	415	215	180	500	270	450	2	5	1 040	200	68	M56
897	390	155	700	20	455	232	203	555	308	490	2	5	1 110	225	68	M56
917	390	155	720	20	455	232	203	555	308	500	2	5	1 165	225	68	M56
972	420	160	760	25	495	252	218	595	328	530	2	6	1 270	240	76	M64
1 012	430	165	790	25	500	256	228	610	338	550	2	6	1 300	245	76	M64
1 032	450	180	830	25	520	265	235	630	350	550	2	6	1 300	260	76	M64

Plummer block housings

S30, split
For spherical roller bearings
with tapered bore
and adapter sleeve

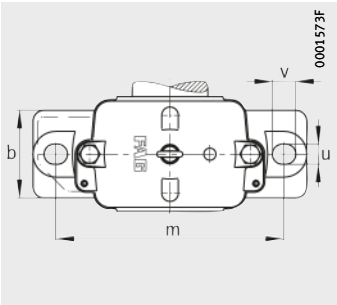

Cross-sections of split bearings
see page 973

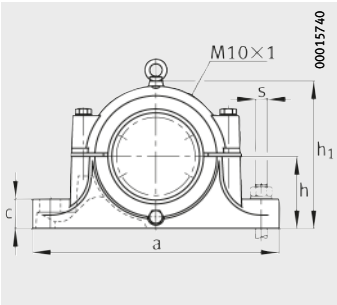

①, ②, ③, ④ [3]

Dimension table · Dimensions in mm

Designation[1]				Felt strips		Mass m
Housing	Bearing	Adapter sleeve	Split bearing	aXbXl mm	Quantity	Housing ≈kg
S3044-H-N-FZ-AF-L	23044-K-MB	H3044X	230SM200-MB	16X12X350	2	98
S3044-H-N-FZ-AL-L	23044-K-MB	H3044X	230SM200-MB	16X12X350	2	98
S3044-H-N-FZ-BF-L	23044-K-MB	H3044X	230SM200-MB	16X12X350	4	98
S3044-H-N-FZ-BL-L	23044-K-MB	H3044X	230SM200-MB	16X12X350	4	98
S3048-H-N-FZ-AF-L	23048-K-MB	H3048	230SM220-MB	16X12X380	2	110
S3048-H-N-FZ-AL-L	23048-K-MB	H3048	230SM220-MB	16X12X380	2	110
S3048-H-N-FZ-BF-L	23048-K-MB	H3048	230SM220-MB	16X12X380	4	110
S3048-H-N-FZ-BL-L	23048-K-MB	H3048	230SM220-MB	16X12X380	4	110
S3052-H-N-FZ-AF-L	23052-K-MB	H3052X	230SM240-MB	16X12X410	2	148
S3052-H-N-FZ-AL-L	23052-K-MB	H3052X	230SM240-MB	16X12X410	2	148
S3052-H-N-FZ-BF-L	23052-K-MB	H3052X	230SM240-MB	16X12X410	4	148
S3052-H-N-FZ-BL-L	23052-K-MB	H3052X	230SM240-MB	16X12X410	4	148
S3056-H-N-FZ-AF-L	23056-B-K-MB	H3056	230SM260-MB	16X12X445	2	165
S3056-H-N-FZ-AL-L	23056-B-K-MB	H3056	230SM260-MB	16X12X445	2	165
S3056-H-N-FZ-BF-L	23056-B-K-MB	H3056	230SM260-MB	16X12X445	4	165
S3056-H-N-FZ-BL-L	23056-B-K-MB	H3056	230SM260-MB	16X12X445	4	165
S3060-H-N-FZ-AF-L	23060-K-MB	H3060	230SM280-MB	16X12X470	2	205
S3060-H-N-FZ-AL-L	23060-K-MB	H3060	230SM280-MB	16X12X470	2	205
S3060-H-N-FZ-BF-L	23060-K-MB	H3060	230SM280-MB	16X12X470	4	205
S3060-H-N-FZ-BL-L	23060-K-MB	H3060	230SM280-MB	16X12X470	4	205
S3064-H-N-FZ-AF-L	23064-K-MB	H3064-HG	230SM300-MB	16X12X505	2	235
S3064-H-N-FZ-AL-L	23064-K-MB	H3064-HG	230SM300-MB	16X12X505	2	235
S3064-H-N-FZ-BF-L	23064-K-MB	H3064-HG	230SM300-MB	16X12X505	4	235
S3064-H-N-FZ-BL-L	23064-K-MB	H3064-HG	230SM300-MB	16X12X505	4	235
S3068-H-N-FZ-AF-L	23068-K-MB	H3068-HG	230SM320-MB	16X12X535	2	280
S3068-H-N-FZ-AL-L	23068-K-MB	H3068-HG	230SM320-MB	16X12X535	2	280
S3068-H-N-FZ-BF-L	23068-K-MB	H3068-HG	230SM320-MB	16X12X535	4	280
S3068-H-N-FZ-BL-L	23068-K-MB	H3068-HG	230SM320-MB	16X12X535	4	280

1) Ordering example:
Housing S3056-H-N-FZ-AL-L (see also page 923), bearing 23056-B-K-MB (see bearing tables),
adapter sleeve H3056 (see dimension tables).

2) Four holes in base from S3060-H-N-FZ.

3) ① Locating bearing AF
② Non-locating bearing AL
③ Locating bearing BF
④ Non-locating bearing BL

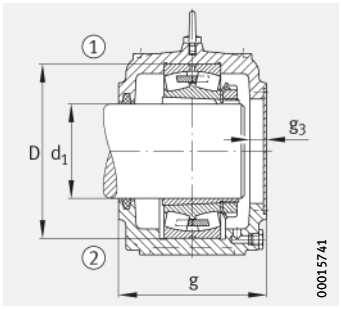

Design A

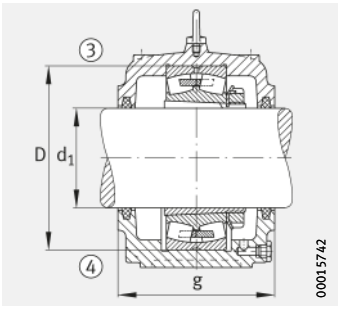

Design B

For bearings with tapered bore and adapter sleeve

Dimensions

d_1	a	g	h_1	b	c	D	g_3	h	m	$n^{2)}$	u	v	s	
													mm	inch
200	690	255	408	190	70	340	25	200	580	–	42	50	M36	$1\,^3/_8$
200	690	255	408	190	70	340	25	200	580	–	42	50	M36	$1\,^3/_8$
200	690	255	408	190	70	340	–	200	580	–	42	50	M36	$1\,^3/_8$
200	690	255	408	190	70	340	–	200	580	–	42	50	M36	$1\,^3/_8$
220	720	265	433	200	75	360	30	210	610	–	42	50	M36	$1\,^3/_8$
220	720	265	433	200	75	360	30	210	610	–	42	50	M36	$1\,^3/_8$
220	720	265	433	200	75	360	–	210	610	–	42	50	M36	$1\,^3/_8$
220	720	265	433	200	75	360	–	210	610	–	42	50	M36	$1\,^3/_8$
240	820	285	485	220	80	400	30	240	680	–	52	70	M45	$1\,^3/_4$
240	820	285	485	220	80	400	30	240	680	–	52	70	M45	$1\,^3/_4$
240	820	285	485	220	80	400	–	240	680	–	52	70	M45	$1\,^3/_4$
240	820	285	485	220	80	400	–	240	680	–	52	70	M45	$1\,^3/_4$
260	860	295	505	230	80	420	30	250	720	–	52	70	M45	$1\,^3/_4$
260	860	295	505	230	80	420	30	250	720	–	52	70	M45	$1\,^3/_4$
260	860	295	505	230	80	420	–	250	720	–	52	70	M45	$1\,^3/_4$
260	860	295	505	230	80	420	–	250	720	–	52	70	M45	$1\,^3/_4$
280	920	320	565	260	90	460	30	280	780	130	42	50	M36	$1\,^3/_8$
280	920	320	565	260	90	460	30	280	780	130	42	50	M36	$1\,^3/_8$
280	920	320	565	260	90	460	–	280	780	130	42	50	M36	$1\,^3/_8$
280	920	320	565	260	90	460	–	280	780	130	42	50	M36	$1\,^3/_8$
300	940	320	570	260	90	480	30	280	800	130	42	50	M36	$1\,^3/_8$
300	940	320	570	260	90	480	30	280	800	130	42	50	M36	$1\,^3/_8$
300	940	320	570	260	90	480	–	280	800	130	42	50	M36	$1\,^3/_8$
300	940	320	570	260	90	480	–	280	800	130	42	50	M36	$1\,^3/_8$
320	1 000	340	615	280	95	520	30	300	860	140	42	50	M36	$1\,^3/_8$
320	1 000	340	615	280	95	520	30	300	860	140	42	50	M36	$1\,^3/_8$
320	1 000	340	615	280	95	520	–	300	860	140	42	50	M36	$1\,^3/_8$
320	1 000	340	615	280	95	520	–	300	860	140	42	50	M36	$1\,^3/_8$

Plummer block housings

S30, split
For spherical roller bearings
with tapered bore
and adapter sleeve

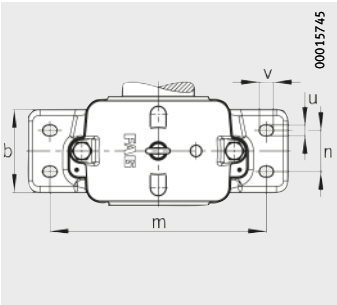

Cross-sections of
unsplit bearings
see page 971

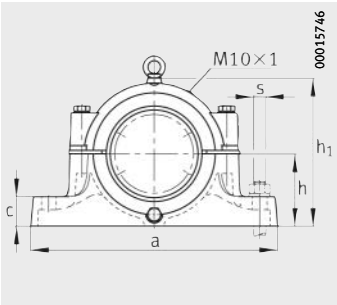

①, ②, ③, ④ [3]

Dimension table (continued) · Dimensions in mm

Designation[1]				Felt strips		Mass m
Housing	Bearing	Adapter sleeve	Split bearing	aXbXl mm	Quantity	Housing ≈kg
S3072-H-N-FZ-AF-L	23072-K-MB	H3072-HG	230SM340-MB	16X12X565	2	340
S3072-H-N-FZ-AL-L	23072-K-MB	H3072-HG	230SM340-MB	16X12X565	2	340
S3072-H-N-FZ-BF-L	23072-K-MB	H3072-HG	230SM340-MB	16X12X565	4	340
S3072-H-N-FZ-BL-L	23072-K-MB	H3072-HG	230SM340-MB	16X12X565	4	340
S3076-H-N-FZ-AF-L	23076-B-K-MB	H3076-HG	230SM360-MB	16X12X600	2	400
S3076-H-N-FZ-AL-L	23076-B-K-MB	H3076-HG	230SM360-MB	16X12X600	2	400
S3076-H-N-FZ-BF-L	23076-B-K-MB	H3076-HG	230SM360-MB	16X12X600	4	400
S3076-H-N-FZ-BL-L	23076-B-K-MB	H3076-HG	230SM360-MB	16X12X600	4	400
S3080-H-N-FZ-AF-L	23080-K-MB	H3080-HG	230SM380-MB	16X12X630	2	460
S3080-H-N-FZ-AL-L	23080-K-MB	H3080-HG	230SM380-MB	16X12X630	2	460
S3080-H-N-FZ-BF-L	23080-K-MB	H3080-HG	230SM380-MB	16X12X630	4	460
S3080-H-N-FZ-BL-L	23080-K-MB	H3080-HG	230SM380-MB	16X12X630	4	460
S3084-H-N-FZ-AF-L	23084-B-K-MB	H3084X-HG	230SM400-MB	16X12X660	2	500
S3084-H-N-FZ-AL-L	23084-B-K-MB	H3084X-HG	230SM400-MB	16X12X660	2	500
S3084-H-N-FZ-BF-L	23084-B-K-MB	H3084X-HG	230SM400-MB	16X12X660	4	500
S3084-H-N-FZ-BL-L	23084-B-K-MB	H3084X-HG	230SM400-MB	16X12X660	4	500
S3088-H-N-FZ-AF-L	23088-K-MB	H3088-HG	230SM410-MB	16X12X675	2	600
S3088-H-N-FZ-AL-L	23088-K-MB	H3088-HG	230SM410-MB	16X12X675	2	600
S3088-H-N-FZ-BF-L	23088-K-MB	H3088-HG	230SM410-MB	16X12X675	4	600
S3088-H-N-FZ-BL-L	23088-K-MB	H3088-HG	230SM410-MB	16X12X675	4	600
S3092-H-N-FZ-AF-L	23092-B-K-MB	H3092-HG	–	16X12X710	2	700
S3092-H-N-FZ-AL-L	23092-B-K-MB	H3092-HG	–	16X12X710	2	700
S3092-H-N-FZ-BF-L	23092-B-K-MB	H3092-HG	–	16X12X710	4	700
S3092-H-N-FZ-BL-L	23092-B-K-MB	H3092-HG	–	16X12X710	4	700
S3096-H-N-FZ-AF-L	23096-K-MB	H3096-HG	230SM450-MB[2]	16X12X740	2	800
S3096-H-N-FZ-AL-L	23096-K-MB	H3096-HG	230SM450-MB[2]	16X12X740	2	800
S3096-H-N-FZ-BF-L	23096-K-MB	H3096-HG	230SM450-MB[2]	16X12X740	4	800
S3096-H-N-FZ-BL-L	23096-K-MB	H3096-HG	230SM450-MB[2]	16X12X740	4	800

1) Ordering example:
Housing S3080-H-N-FZ-AL-L (see also page 923), bearing 23080-K-MB (see bearing tables),
adapter sleeve H3080-HG (see dimension tables).

2) With separate locking rings.

3) ① Locating bearing AF
② Non-locating bearing AL
③ Locating bearing BF
④ Non-locating bearing BL

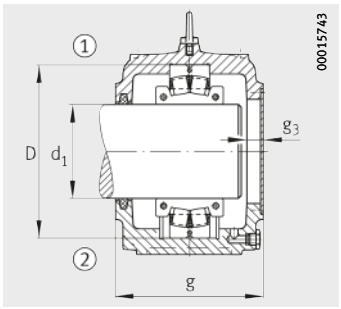

Design A
For split bearings

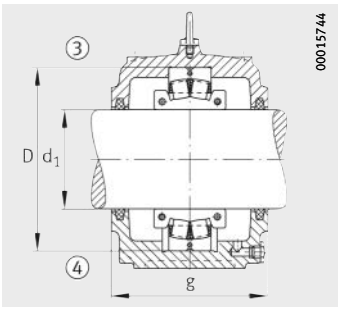

Design B
For split bearings

Dimensions

d_1	a	g	h_1	b	c	D	g_3	h	m	n	u	v	s	
													mm	inch
340	1 060	345	655	280	95	540	30	320	900	140	42	50	M36	$1^3/_8$
340	1 060	345	655	280	95	540	30	320	900	140	42	50	M36	$1^3/_8$
340	1 060	345	655	280	95	540	–	320	900	140	42	50	M36	$1^3/_8$
340	1 060	345	655	280	95	540	–	320	900	140	42	50	M36	$1^3/_8$
360	1 060	380	675	280	100	560	30	330	900	140	42	50	M36	$1^3/_8$
360	1 060	380	675	280	100	560	30	330	900	140	42	50	M36	$1^3/_8$
360	1 060	380	675	280	100	560	–	330	900	140	42	50	M36	$1^3/_8$
360	1 060	380	675	280	100	560	–	330	900	140	42	50	M36	$1^3/_8$
380	1 100	400	715	325	120	600	30	350	950	160	42	50	M36	$1^3/_8$
380	1 100	400	715	325	120	600	30	350	950	160	42	50	M36	$1^3/_8$
380	1 100	400	715	325	120	600	–	350	950	160	42	50	M36	$1^3/_8$
380	1 100	400	715	325	120	600	–	350	950	160	42	50	M36	$1^3/_8$
400	1 160	430	750	340	120	620	30	375	980	170	42	50	M36	$1^3/_8$
400	1 160	430	750	340	120	620	30	375	980	170	42	50	M36	$1^3/_8$
400	1 160	430	750	340	120	620	–	375	980	170	42	50	M36	$1^3/_8$
400	1 160	430	750	340	120	620	–	375	980	170	42	50	M36	$1^3/_8$
410	1 200	430	780	340	125	650	30	390	1 020	170	42	50	M36	$1^3/_8$
410	1 200	430	780	340	125	650	30	390	1 020	170	42	50	M36	$1^3/_8$
410	1 200	430	780	340	125	650	–	390	1 020	170	42	50	M36	$1^3/_8$
410	1 200	430	780	340	125	650	–	390	1 020	170	42	50	M36	$1^3/_8$
430	1 260	440	805	360	130	680	30	400	1 080	180	56	75	M48	$1^7/_8$
430	1 260	440	805	360	130	680	30	400	1 080	180	56	75	M48	$1^7/_8$
430	1 260	440	805	360	130	680	–	400	1 080	180	56	75	M48	$1^7/_8$
430	1 260	440	805	360	130	680	–	400	1 080	180	56	75	M48	$1^7/_8$
450	1 380	440	825	380	190	700	30	410	1 180	190	56	75	M48	$1^7/_8$
450	1 380	440	825	380	190	700	30	410	1 180	190	56	75	M48	$1^7/_8$
450	1 380	440	825	380	190	700	–	410	1 180	190	56	75	M48	$1^7/_8$
450	1 380	440	825	380	190	700	–	410	1 180	190	56	75	M48	$1^7/_8$

Plummer block housings

SD5, split
For spherical roller bearings
with tapered bore
and adapter sleeve

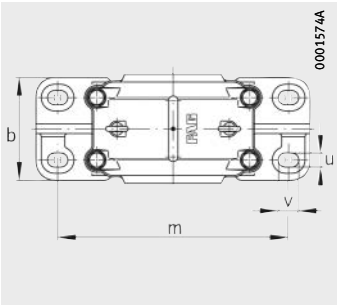

Cross-sections of split bearings
see page 977

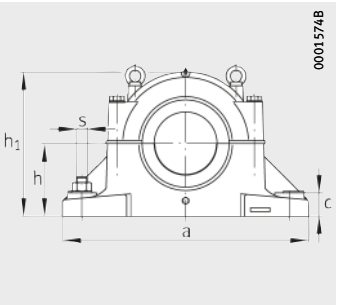

①, ②, ③, ④ [2)]

Dimension table · Dimensions in mm

Designation[1)]						Mass m
Housing	Bearing	Adapter sleeve	Split bearing	Felt strips		Housing
				mm	Quantity	≈kg
SD536-N-FZ-AF-L	22236-E1-K	H3136	–	16X12X290	4	118
SD536-N-FZ-AL-L	22236-E1-K	H3136	–	16X12X290	4	118
SD536-N-FZ-BF-L	22236-E1-K	H3136	–	16X12X290	8	118
SD536-N-FZ-BL-L	22236-E1-K	H3136	–	16X12X290	8	118
SD538-N-FZ-AF-L	22238-K-MB	H3138	–	16X12X305	4	136
SD538-N-FZ-AL-L	22238-K-MB	H3138	–	16X12X305	4	136
SD538-N-FZ-BF-L	22238-K-MB	H3138	–	16X12X305	8	136
SD538-N-FZ-BL-L	22238-K-MB	H3138	–	16X12X305	8	136
SD540-N-FZ-AF-L	22240-B-K-MB	H3140	222SM180-MA	16X12X320	4	170
SD540-N-FZ-AL-L	22240-B-K-MB	H3140	222SM180-MA	16X12X320	4	170
SD540-N-FZ-BF-L	22240-B-K-MB	H3140	222SM180-MA	16X12X320	8	170
SD540-N-FZ-BL-L	22240-B-K-MB	H3140	222SM180-MA	16X12X320	8	170
SD544-N-FZ-AF-L	22244-B-K-MB	H3144X	222SM200-MA	16X12X350	4	216
SD544-N-FZ-AL-L	22244-B-K-MB	H3144X	222SM200-MA	16X12X350	4	216
SD544-N-FZ-BF-L	22244-B-K-MB	H3144X	222SM200-MA	16X12X350	8	216
SD544-N-FZ-BL-L	22244-B-K-MB	H3144X	222SM200-MA	16X12X350	8	216
SD548-N-FZ-AF-L	22248-B-K-MB	H3148X	222SM220-MA	16X12X385	4	258
SD548-N-FZ-AL-L	22248-B-K-MB	H3148X	222SM220-MA	16X12X385	4	258
SD548-N-FZ-BF-L	22248-B-K-MB	H3148X	222SM220-MA	16X12X385	8	258
SD548-N-FZ-BL-L	22248-B-K-MB	H3148X	222SM220-MA	16X12X385	8	258

1) Ordering example:
Housing SD540-N-FZ-BF-L (see also page 925), bearing 22240-B-K-MB (see bearing tables),
adapter sleeve H3140 (see dimension tables).

2) ① Locating bearing AF
② Non-locating bearing AL
③ Locating bearing BF
④ Non-locating bearing BL

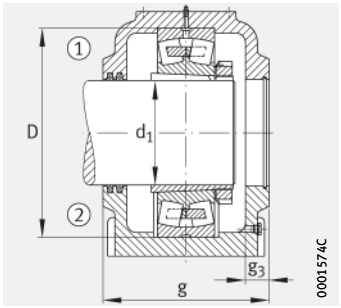

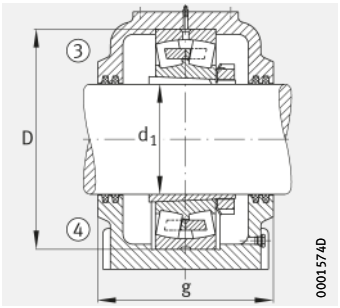

Design A

Design B

For bearings with tapered bore and adapter sleeve

Dimensions

d_1	a	g	h_1	b	c	D	g_3	h	m	n	u	v	s	
													mm	inch
160	650	280	380	260	60	320	50	190	540	150	36	50	M30	$1^1/_8$
160	650	280	380	260	60	320	50	190	540	150	36	50	M30	$1^1/_8$
160	650	280	380	260	60	320	–	190	540	150	36	50	M30	$1^1/_8$
160	650	280	380	260	60	320	–	190	540	150	36	50	M30	$1^1/_8$
170	700	290	400	280	65	340	50	200	570	160	40	55	M33	$1^1/_4$
170	700	290	400	280	65	340	50	200	570	160	40	55	M33	$1^1/_4$
170	700	290	400	280	65	340	–	200	570	160	40	55	M33	$1^1/_4$
170	700	290	400	280	65	340	–	200	570	160	40	55	M33	$1^1/_4$
180	740	300	420	290	65	360	50	210	610	170	40	55	M33	$1^1/_4$
180	740	300	420	290	65	360	50	210	610	170	40	55	M33	$1^1/_4$
180	740	300	420	290	65	360	–	210	610	170	40	55	M33	$1^1/_4$
180	740	300	420	290	65	360	–	210	610	170	40	55	M33	$1^1/_4$
200	820	330	475	320	70	400	50	240	680	190	42	62	M36	$1^3/_8$
200	820	330	475	320	70	400	50	240	680	190	42	62	M36	$1^3/_8$
200	820	330	475	320	70	400	–	240	680	190	42	62	M36	$1^3/_8$
200	820	330	475	320	70	400	–	240	680	190	42	62	M36	$1^3/_8$
220	880	340	515	330	85	440	50	260	740	200	45	65	M39	$1^1/_2$
220	880	340	515	330	85	440	50	260	740	200	45	65	M39	$1^1/_2$
220	880	340	515	330	85	440	–	260	740	200	45	65	M39	$1^1/_2$
220	880	340	515	330	85	440	–	260	740	200	45	65	M39	$1^1/_2$

Plummer block housings

SD5, split
For spherical roller bearings
with tapered bore
and adapter sleeve

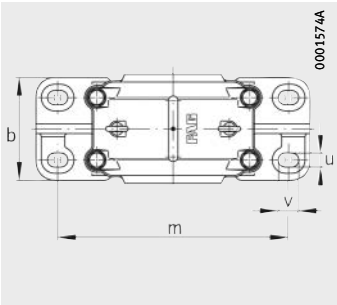

Cross-sections of
unsplit bearings
see page 975

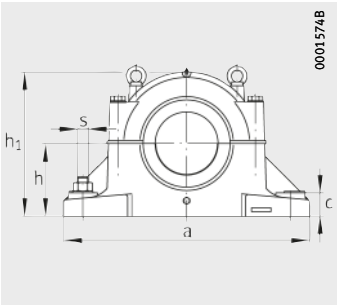

①, ②, ③, ④ [2)]

Dimension table (continued) · Dimensions in mm

Designation[1)]						Mass m
Housing	Bearing	Adapter sleeve	Split bearing	Felt strips		Housing
				mm	Quantity	≈kg
SD552-N-FZ-AF-L	22252-B-K-MB	H3152X	222SM240-MA	16X12X415	4	323
SD552-N-FZ-AL-L	22252-B-K-MB	H3152X	222SM240-MA	16X12X415	4	323
SD552-N-FZ-BF-L	22252-B-K-MB	H3152X	222SM240-MA	16X12X415	8	323
SD552-N-FZ-BL-L	22252-B-K-MB	H3152X	222SM240-MA	16X12X415	8	323
SD556-N-FZ-AF-L	22256-B-K-MB	H3156X	222SM260-MA	16X12X445	4	404
SD556-N-FZ-AL-L	22256-B-K-MB	H3156X	222SM260-MA	16X12X445	4	404
SD556-N-FZ-BF-L	22256-B-K-MB	H3156X	222SM260-MA	16X12X445	8	404
SD556-N-FZ-BL-L	22256-B-K-MB	H3156X	222SM260-MA	16X12X445	8	404
SD560-N-FZ-AF-L	22260-K-MB	H3160	222SM280-MA	16X12X480	4	480
SD560-N-FZ-AL-L	22260-K-MB	H3160	222SM280-MA	16X12X480	4	480
SD560-N-FZ-BF-L	22260-K-MB	H3160	222SM280-MA	16X12X480	8	480
SD560-N-FZ-BL-L	22260-K-MB	H3160	222SM280-MA	16X12X480	8	480
SD564-N-FZ-AF-L	22264-K-MB	H3164	222SM300-MA	16X12X510	4	605
SD564-N-FZ-AL-L	22264-K-MB	H3164	222SM300-MA	16X12X510	4	605
SD564-N-FZ-BF-L	22264-K-MB	H3164	222SM300-MA	16X12X510	8	605
SD564-N-FZ-BL-L	22264-K-MB	H3164	222SM300-MA	16X12X510	8	605

1) Ordering example:
Housing SD556-N-FZ-BF-L (see also page 925), bearing 22256-B-K-MB (see bearing tables),
adapter sleeve H3156X (see dimension tables).

2) ① Locating bearing AF
② Non-locating bearing AL
③ Locating bearing BF
④ Non-locating bearing BL

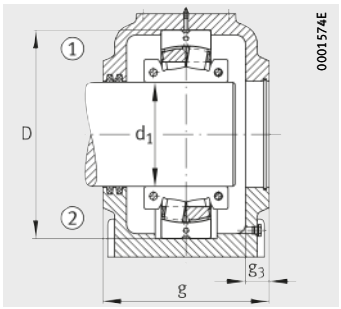

Design A
For split bearings

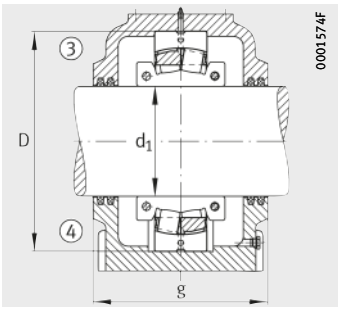

Design B
For split bearings

Dimensions

d_1	a	g	h_1	b	c	D	g_3	h	m	n	u	v	s	
													mm	inch
240	940	370	555	360	85	480	50	280	790	210	45	65	M39	$1\,1/2$
240	940	370	555	360	85	480	50	280	790	210	45	65	M39	$1\,1/2$
240	940	370	555	360	85	480	–	280	790	210	45	65	M39	$1\,1/2$
240	940	370	555	360	85	480	–	280	790	210	45	65	M39	$1\,1/2$
260	990	390	590	380	100	500	50	300	830	230	52	77	M45	$1\,3/4$
260	990	390	590	380	100	500	50	300	830	230	52	77	M45	$1\,3/4$
260	990	390	590	380	100	500	–	300	830	230	52	77	M45	$1\,3/4$
260	990	390	590	380	100	500	–	300	830	230	52	77	M45	$1\,3/4$
280	1 060	410	640	400	100	540	50	325	890	250	52	77	M45	$1\,3/4$
280	1 060	410	640	400	100	540	50	325	890	250	52	77	M45	$1\,3/4$
280	1 060	410	640	400	100	540	–	325	890	250	52	77	M45	$1\,3/4$
280	1 060	410	640	400	100	540	–	325	890	250	52	77	M45	$1\,3/4$
300	1 110	440	690	430	110	580	50	355	930	270	56	85	M48	2
300	1 110	440	690	430	110	580	50	355	930	270	56	85	M48	2
300	1 110	440	690	430	110	580	–	355	930	270	56	85	M48	2
300	1 110	440	690	430	110	580	–	355	930	270	56	85	M48	2

Plummer block housings

SD31, split
For spherical roller bearings
with tapered bore
and adapter sleeve

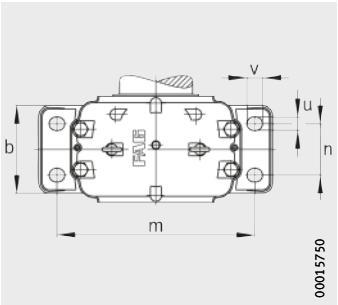

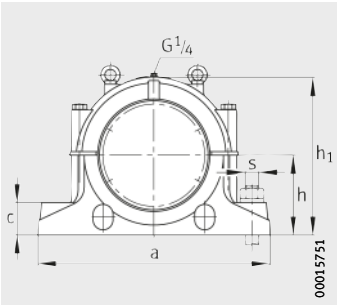

Cross-section of split bearings
see page 981

Dimension table · Dimensions in mm

Designation[1]								Mass m
Housing	Bearing	Adapter sleeve	Split bearing	Locating ring		Labyrinth ring with round cord		Housing
					Quantity		Quantity	≈kg
SD3138-H-TS-A-L	23138-E1A-K-M	H3138	231SM170-MA	FRM320/10	2	TS38	1	95
SD3138-H-TS-B-L	23138-E1A-K-M	H3138	231SM170-MA	FRM320/10	2	TS38	2	95
SD3140-H-TS-A-L	23140-B-K-MB	H3140	231SM180-MA	FRM340/10	2	TS40	1	120
SD3140-H-TS-B-L	23140-B-K-MB	H3140	231SM180-MA	FRM340/10	2	TS40	2	120
SD3144-H-TS-AF-L	23144-B-K-MB	H3144X	231SM200-MA	–	–	TS44	1	135
SD3144-H-TS-AL-L	23144-B-K-MB	H3144X	231SM200-MA	–	–	TS44	1	135
SD3144-H-TS-BF-L	23144-B-K-MB	H3144X	231SM200-MA	–	–	TS44	2	135
SD3144-H-TS-BL-L	23144-B-K-MB	H3144X	231SM200-MA	–	–	TS44	2	135
SD3148-H-TS-AF-L	23148-B-K-MB	H3148X	231SM220-MA	–	–	TS48	1	175
SD3148-H-TS-AL-L	23148-B-K-MB	H3148X	231SM220-MA	–	–	TS48	1	175
SD3148-H-TS-BF-L	23148-B-K-MB	H3148X	231SM220-MA	–	–	TS48	2	175
SD3148-H-TS-BL-L	23148-B-K-MB	H3148X	231SM220-MA	–	–	TS48	2	175
SD3152-H-TS-AF-L	23152-K-MB	H3152X	231SM240-MA	–	–	TS52	1	210
SD3152-H-TS-AL-L	23152-K-MB	H3152X	231SM240-MA	–	–	TS52	1	210
SD3152-H-TS-BF-L	23152-K-MB	H3152X	231SM240-MA	–	–	TS52	2	210
SD3152-H-TS-BL-L	23152-K-MB	H3152X	231SM240-MA	–	–	TS52	2	210
SD3156-H-TS-AF-L	23156-B-K-MB	H3156X	231SM260-MA	–	–	TS56	1	240
SD3156-H-TS-AL-L	23156-B-K-MB	H3156X	231SM260-MA	–	–	TS56	1	240
SD3156-H-TS-BF-L	23156-B-K-MB	H3156X	231SM260-MA	–	–	TS56	2	240
SD3156-H-TS-BL-L	23156-B-K-MB	H3156X	231SM260-MA	–	–	TS56	2	240
SD3160-H-TS-AF-L	23160-B-K-MB	H3160-HG	231SM280-MA	–	–	TS60	1	290
SD3160-H-TS-AL-L	23160-B-K-MB	H3160-HG	231SM280-MA	–	–	TS60	1	290
SD3160-H-TS-BF-L	23160-B-K-MB	H3160-HG	231SM280-MA	–	–	TS60	2	290
SD3160-H-TS-BL-L	23160-B-K-MB	H3160-HG	231SM280-MA	–	–	TS60	2	290
SD3164-H-TS-AF-L	23164-K-MB	H3164-HG	231SM300-MA	–	–	TS64	1	330
SD3164-H-TS-AL-L	23164-K-MB	H3164-HG	231SM300-MA	–	–	TS64	1	330
SD3164-H-TS-BF-L	23164-K-MB	H3164-HG	231SM300-MA	–	–	TS64	2	330
SD3164-H-TS-BL-L	23164-K-MB	H3164-HG	231SM300-MA	–	–	TS64	2	330
SD3168-H-TS-AF-L	23168-B-K-MB	H3168-HG	231SM320-MA	–	–	TS68	1	380
SD3168-H-TS-AL-L	23168-B-K-MB	H3168-HG	231SM320-MA	–	–	TS68	1	380
SD3168-H-TS-BF-L	23168-B-K-MB	H3168-HG	231SM320-MA	–	–	TS68	2	380
SD3168-H-TS-BL-L	23168-B-K-MB	H3168-HG	231SM320-MA	–	–	TS68	2	380

[1] Ordering example:
Housing SD3164-H-TS-BL-L (see also page 928), bearing 23164-K-MB (see bearing tables),
adapter sleeve H3164-HG (see dimension tables).

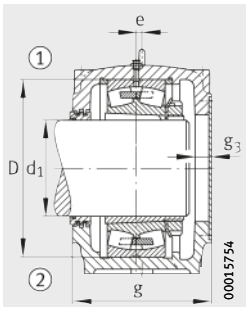

Design A (TS-A)
① Locating bearing
② Non-locating bearing

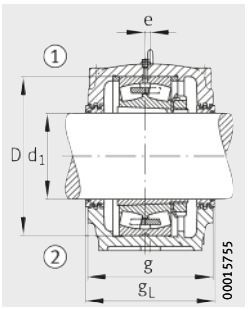

Design B (TS-B)
① Locating bearing
② Non-locating bearing

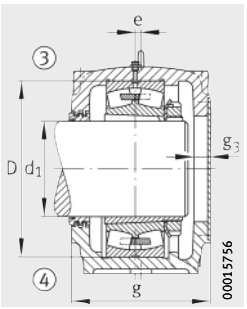

Design A
③ Loc. brg. TS-AF
④ Non-loc. brg. TS-AL

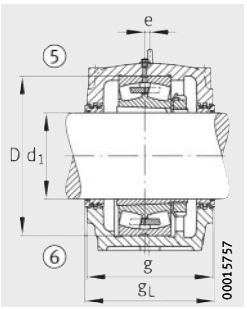

Design B
⑤ Loc. brg. TS-BF
⑥ Non-loc. brg. TS-BL

Dimensions

d_1	a	g	h_1	b	c	D	e	g_L	g_3	h	m	n	u	v	s	
															mm	inch
170	560	260	375	210	80	320	10	–	35	190	480	120	30	36	M24	1
170	560	260	375	210	80	320	10	270	–	190	480	120	30	36	M24	1
180	610	280	410	230	85	340	10	–	35	210	510	130	36	42	M30	$1^1/_8$
180	610	280	410	230	85	340	10	290	–	210	510	130	36	42	M30	$1^1/_8$
200	640	290	435	240	90	370	12	–	35	220	540	140	36	42	M30	$1^1/_8$
200	640	290	435	240	90	370	12	–	35	220	540	140	36	42	M30	$1^1/_8$
200	640	290	435	240	90	370	12	300	–	220	540	140	36	42	M30	$1^1/_8$
200	640	290	435	240	90	370	12	300	–	220	540	140	36	42	M30	$1^1/_8$
220	700	310	475	260	95	400	12	–	35	240	600	150	36	42	M30	$1^1/_8$
220	700	310	475	260	95	400	12	–	35	240	600	150	36	42	M30	$1^1/_8$
220	700	310	475	260	95	400	12	320	–	240	600	150	36	42	M30	$1^1/_8$
220	700	310	475	260	95	400	12	320	–	240	600	150	36	42	M30	$1^1/_8$
240	770	320	515	280	100	440	13	–	35	260	650	160	42	52	M36	$1^3/_8$
240	770	320	515	280	100	440	13	–	35	260	650	160	42	52	M36	$1^3/_8$
240	770	320	515	280	100	440	13	330	–	260	650	160	42	52	M36	$1^3/_8$
240	770	320	515	280	100	440	13	330	–	260	650	160	42	52	M36	$1^3/_8$
260	790	320	550	280	105	460	16	–	35	280	670	160	42	52	M36	$1^3/_8$
260	790	320	550	280	105	460	16	–	35	280	670	160	42	52	M36	$1^3/_8$
260	790	320	550	280	105	460	16	330	–	280	670	160	42	52	M36	$1^3/_8$
260	790	320	550	280	105	460	16	330	–	280	670	160	42	52	M36	$1^3/_8$
280	830	350	590	310	110	500	22	–	35	300	710	190	42	52	M36	$1^3/_8$
280	830	350	590	310	110	500	22	–	35	300	710	190	42	52	M36	$1^3/_8$
280	830	350	590	310	110	500	22	360	–	300	710	190	42	52	M36	$1^3/_8$
280	830	350	590	310	110	500	22	360	–	300	710	190	42	52	M36	$1^3/_8$
300	880	370	630	330	115	540	23	–	35	320	750	200	42	52	M36	$1^3/_8$
300	880	370	630	330	115	540	23	–	35	320	750	200	42	52	M36	$1^3/_8$
300	880	370	630	330	115	540	23	380	–	320	750	200	42	52	M36	$1^3/_8$
300	880	370	630	330	115	540	23	380	–	320	750	200	42	52	M36	$1^3/_8$
320	950	400	675	360	120	580	24	–	35	340	810	220	42	52	M36	$1^3/_8$
320	950	400	675	360	120	580	24	–	35	340	810	220	42	52	M36	$1^3/_8$
320	950	400	675	360	120	580	24	410	–	340	810	220	42	52	M36	$1^3/_8$
320	950	400	675	360	120	580	24	410	–	340	810	220	42	52	M36	$1^3/_8$

Plummer block housings

SD31, split
For spherical roller bearings
with tapered bore
and adapter sleeve

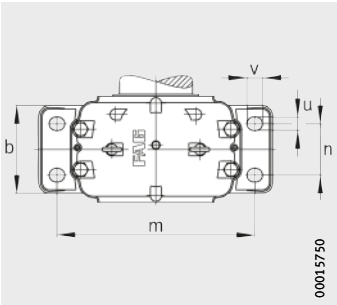

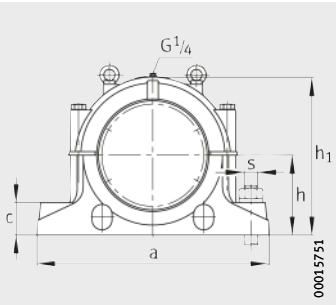

Dimension table (continued) · Dimensions in mm

Designation[1]						Mass m
Housing	Bearing	Adapter sleeve	Split bearing	Labyrinth ring with round cord		Housing
					Quantity	≈kg
SD3172-H-TS-AF-L	23172-K-MB	H3172-HG	231SM340-MA	TS72	1	420
SD3172-H-TS-AL-L	23172-K-MB	H3172-HG	231SM340-MA	TS72	1	420
SD3172-H-TS-BF-L	23172-K-MB	H3172-HG	231SM340-MA	TS72	2	420
SD3172-H-TS-BL-L	23172-K-MB	H3172-HG	231SM340-MA	TS72	2	420
SD3176-H-TS-AF-L	23176-K-MB	H3176-HG	231SM360-MA	TS76	1	490
SD3176-H-TS-AL-L	23176-K-MB	H3176-HG	231SM360-MA	TS76	1	490
SD3176-H-TS-BF-L	23176-K-MB	H3176-HG	231SM360-MA	TS76	2	490
SD3176-H-TS-BL-L	23176-K-MB	H3176-HG	231SM360-MA	TS76	2	490
SD3180-H-TS-AF-L	23180-B-K-MB	H3180-HG	231SM380-MA	TS80	1	570
SD3180-H-TS-AL-L	23180-B-K-MB	H3180-HG	231SM380-MA	TS80	1	570
SD3180-H-TS-BF-L	23180-B-K-MB	H3180-HG	231SM380-MA	TS80	2	570
SD3180-H-TS-BL-L	23180-B-K-MB	H3180-HG	231SM380-MA	TS80	2	570
SD3184-H-TS-AF-L	23184-K-MB	H3184-HG	231SM400-MA	TS84	1	610
SD3184-H-TS-AL-L	23184-K-MB	H3184-HG	231SM400-MA	TS84	1	610
SD3184-H-TS-BF-L	23184-K-MB	H3184-HG	231SM400-MA	TS84	2	610
SD3184-H-TS-BL-L	23184-K-MB	H3184-HG	231SM400-MA	TS84	2	610
SD3188-H-TS-AF-L	23188-K-MB	H3188-HG	231SM410-MA[2]	TS88	1	770
SD3188-H-TS-AL-L	23188-K-MB	H3188-HG	231SM410-MA[2]	TS88	1	770
SD3188-H-TS-BF-L	23188-K-MB	H3188-HG	231SM410-MA[2]	TS88	2	770
SD3188-H-TS-BL-L	23188-K-MB	H3188-HG	231SM410-MA[2]	TS88	2	770
SD3192-H-TS-AF-L	23192-K-MB	H3192-HG	231SM430-MA[2]	TS92	1	830
SD3192-H-TS-AL-L	23192-K-MB	H3192-HG	231SM430-MA[2]	TS92	1	830
SD3192-H-TS-BF-L	23192-K-MB	H3192-HG	231SM430-MA[2]	TS92	2	830
SD3192-H-TS-BL-L	23192-K-MB	H3192-HG	231SM430-MA[2]	TS92	2	830
SD3196-H-TS-AF-L	23196-K-MB	H3196-HG	–	TS96	1	930
SD3196-H-TS-AL-L	23196-K-MB	H3196-HG	–	TS96	1	930
SD3196-H-TS-BF-L	23196-K-MB	H3196-HG	–	TS96	2	930
SD3196-H-TS-BL-L	23196-K-MB	H3196-HG	–	TS96	2	930

1) Ordering example:
Housing SD3188-H-TS-BL-L (see also page 928), bearing 23188-K-MB (see bearing tables),
adapter sleeve H3188-HG (see dimension tables).

2) With separate locking rings.

3) With split bearings.

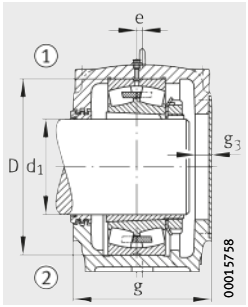

Design A
① Loc. brg. TS-AF
② Non-loc. brg. TS-AL

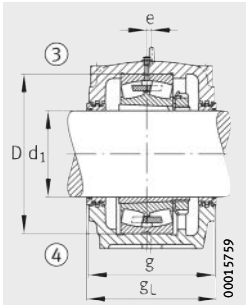

Design B
③ Loc. brg. TS-BF
④ Non-loc. brg. TS-BL

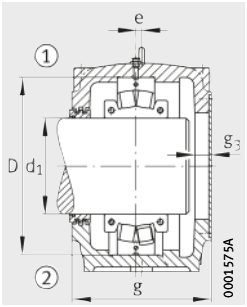

Design A[3)]
① Loc. brg. TS-AF
② Non-loc. brg. TS-AL

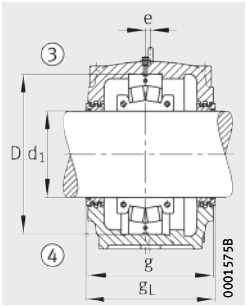

Design B[3)]
③ Loc. brg. TS-BF
④ Non-loc. brg. TS-BL

Dimensions

d_1	a	g	h_1	b	c	D	e	g_L	g_3	h	m	n	u	v	s	
															mm	inch
340	1 000	400	695	360	120	600	30	–	35	350	840	220	42	52	M36	$1^3/_8$
340	1 000	400	695	360	120	600	30	–	35	350	840	220	42	52	M36	$1^3/_8$
340	1 000	400	695	360	120	600	30	410	–	350	840	220	42	52	M36	$1^3/_8$
340	1 000	400	695	360	120	600	30	410	–	350	840	220	42	52	M36	$1^3/_8$
360	1 040	400	715	360	120	620	30	–	35	360	870	220	42	52	M36	$1^3/_8$
360	1 040	400	715	360	120	620	30	–	35	360	870	220	42	52	M36	$1^3/_8$
360	1 040	400	715	360	120	620	30	410	–	360	870	220	42	52	M36	$1^3/_8$
360	1 040	400	715	360	120	620	30	410	–	360	870	220	42	52	M36	$1^3/_8$
380	1 120	430	755	390	125	650	30	–	35	380	950	240	48	60	M42	$1^5/_8$
380	1 120	430	755	390	125	650	30	–	35	380	950	240	48	60	M42	$1^5/_8$
380	1 120	430	755	390	125	650	30	440	–	380	950	240	48	60	M42	$1^5/_8$
380	1 120	430	755	390	125	650	30	440	–	380	950	240	48	60	M42	$1^5/_8$
400	1 170	460	810	420	130	700	35	–	35	410	1 000	260	48	60	M42	$1^5/_8$
400	1 170	460	810	420	130	700	35	–	35	410	1 000	260	48	60	M42	$1^5/_8$
400	1 170	460	810	420	130	700	35	470	–	410	1 000	260	48	60	M42	$1^5/_8$
400	1 170	460	810	420	130	700	35	470	–	410	1 000	260	48	60	M42	$1^5/_8$
410	1 220	460	835	430	135	720	35	–	35	420	1 030	260	48	60	M42	$1^5/_8$
410	1 220	460	835	430	135	720	35	–	35	420	1 030	260	48	60	M42	$1^5/_8$
410	1 220	460	835	430	135	720	35	470	–	420	1 030	260	48	60	M42	$1^5/_8$
410	1 220	460	835	430	135	720	35	470	–	420	1 030	260	48	60	M42	$1^5/_8$
430	1 280	470	875	440	145	760	35	–	35	440	1 070	260	48	60	M42	$1^5/_8$
430	1 280	470	875	440	145	760	35	–	35	440	1 070	260	48	60	M42	$1^5/_8$
430	1 280	470	875	440	145	760	35	480	–	440	1 070	260	48	60	M42	$1^5/_8$
430	1 280	470	875	440	145	760	35	480	–	440	1 070	260	48	60	M42	$1^5/_8$
450	1 330	470	920	440	155	790	45	–	35	460	1 110	260	66	80	M56	$2^1/_4$
450	1 330	470	920	440	155	790	45	–	35	460	1 110	260	66	80	M56	$2^1/_4$
450	1 330	470	920	440	155	790	45	480	–	460	1 110	260	66	80	M56	$2^1/_4$
450	1 330	470	920	440	155	790	45	480	–	460	1 110	260	66	80	M56	$2^1/_4$

Plummer block housings

BND, unsplit
For spherical roller bearings
with cylindrical bore,
with tapered bore
and adapter sleeve

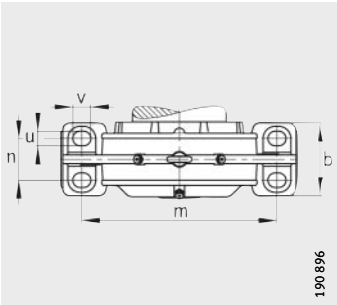

Cross-sections of bearings
with tapered bore
see page 985 and page 987

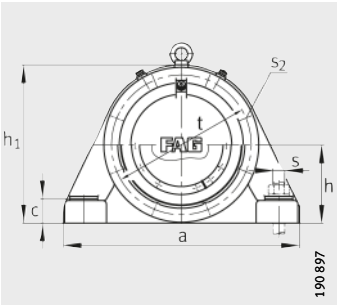

①, ②, ③, ④ [2]

Dimension table · Dimensions in mm

Designation[1]			Mass m	Dimensions									
Housing	Bearing	Adapter sleeve	Housing ≈kg	d	d_1	a	g_1	h_1	b	c	D	d_c min.	d_z min.
BND2236	22236-	H3136	130	**180**	160	680	214	425	210	65	320	176	196
BND3236	23236-	H2336	140	**180**	160	680	240	425	210	65	320	176	196
BND3138	23138-	H3138	125	**190**	170	680	232	425	210	65	320	182	202
BND2238	22238-	H3138	170	**190**	170	710	222	455	220	85	340	186	206
BND3238	23228-	H2338	170	**190**	170	710	250	455	220	85	340	186	206
BND3140	23140-	H3140	170	**200**	180	710	242	455	220	85	340	192	212
BND2240	22240-	H3140	185	**200**	180	780	230	475	240	75	360	196	216
BND3240	23240-	H2340	205	**200**	180	780	260	475	240	75	360	196	216
BND3044	23044-	H3044X	100	**220**	200	640	206	430	200	65	340	212	232
BND3144	23144-	H3144X	190	**220**	200	780	252	475	240	75	370	216	236
BND2244	22244-	H3144X	290	**220**	200	890	264	550	250	80	400	216	236
BND3244	23244-	H2344X	240	**220**	200	850	279	525	250	80	400	216	236
BND3048	23048-	H3048	130	**240**	220	680	216	455	210	70	360	232	252
BND3148	23148-	H3148X	280	**240**	220	890	284	550	250	80	400	236	256
BND2248	22248-	H3148X	315	**240**	220	900	268	585	250	90	440	236	256
BND3248	23248-	H2348X	330	**240**	220	900	308	585	250	90	440	236	256
BND3052	23052-	H3052X	160	**260**	240	720	226	500	220	75	400	256	276
BND3152	23152-	H3152X	310	**260**	240	900	292	585	250	90	440	256	276
BND2252	22252-	H3152X	370	**260**	240	960	286	625	290	95	480	260	280
BND3252	23252-	H2352X	380	**260**	240	960	330	625	290	95	480	260	280

1) Ordering example:
Housing BND3148-Z-Y-BF-S (see also page 930),
bearing 23148-B-MB (see bearing tables).

2) ① Locating bearing AF
② Non-locating bearing AL
③ Locating bearing BF
④ Non-locating bearing BL

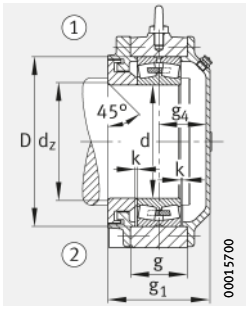

Design A

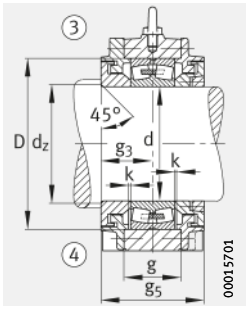

Design B

Housing with labyrinth seal
for bearings with cylindrical bore

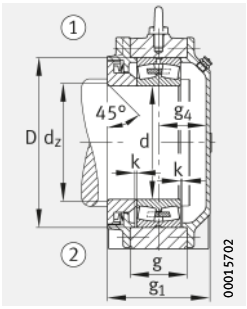

Design A

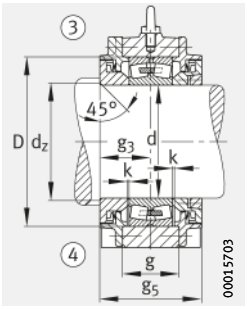

Design B

Housing with Taconite seal
for bearings with cylindrical bore

g	g_2	g_3	g_4 min.	g_5	h	k	m	n	u	v	s	t	s_2	
														Quantity
112	248	114	92	228	210	3	550	120	36	45	M30	370	M16	8
138	274	127	105	254	210	3	550	120	36	45	M30	370	M16	8
130	266	123	98	246	210	3	550	120	36	45	M30	370	M16	8
115	258	114	98	228	220	3	560	120	42	52	M36	380	M16	8
143	286	128	112	256	220	3	560	120	42	52	M36	380	M16	8
135	278	124	108	248	220	3	560	120	42	52	M36	380	M16	8
128	269	123	99	246	235	4	640	140	42	52	M36	420	M16	8
158	299	138	114	276	235	4	640	140	42	52	M36	420	M16	8
115	241	103	95	206	215	3	540	115	42	52	M36	375	M16	8
150	291	134	110	268	235	4	640	140	42	52	M36	420	M16	8
140	314	142	112	284	270	4	720	140	42	52	M36	455	M20	8
175	329	147	122	294	260	4	700	140	42	52	M36	445	M20	8
120	251	108	100	216	225	4	560	120	42	52	M36	400	M16	8
160	334	152	122	304	270	4	720	140	42	52	M36	455	M20	8
150	311	138	120	276	290	4	750	140	42	52	M36	510	M20	8
190	351	158	140	316	290	4	750	140	42	52	M36	510	M20	8
130	261	113	103	226	250	4	600	130	42	52	M36	440	M16	8
174	335	150	132	300	290	4	750	140	42	52	M36	510	M20	8
161	326	148	126	296	310	3	800	160	42	52	M36	535	M20	8
205	370	170	148	340	310	3	800	160	42	52	M36	535	M20	8

Plummer block housings

BND, unsplit
For spherical roller bearings
with cylindrical bore,
with tapered bore
and adapter sleeve

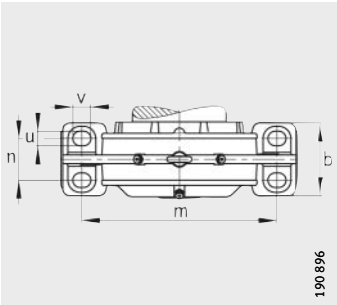

Cross-sections of bearings
with cylindrical bore
see page 983

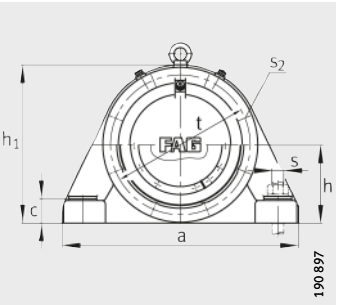

①, ②, ③, ④ [2]

Dimension table (continued) · Dimensions in mm

Designation[1]			Mass m	Dimensions									
Housing	Bearing	Adapter sleeve	Housing ≈kg	d	d_1	a	g_1	h_1	b	c	D	d_c min.	d_z min.
BND3056	23056-	H3056	180	**280**	260	760	236	520	240	80	420	276	296
BND3156	23156-	H3156X	335	**280**	260	900	294	585	250	90	460	280	300
BND2256	22256-	H3156X	420	**280**	260	1 000	297	645	300	100	500	280	300
BND3256	23256-	H2356X	490	**280**	260	1 000	343	645	300	100	500	280	300
BND3060	23060-	H3060	220	**300**	280	820	261	570	250	85	460	296	316
BND3160	23160-	H3160	400	**300**	280	1 000	327	645	300	100	500	300	320
BND2260	22260-	H3160	485	**300**	280	1 100	317	695	330	105	540	300	320
BND3260	23260-	H3260	570	**300**	280	1 100	369	705	330	105	540	300	320
BND3064	23064-	H3064	250	**320**	300	860	266	590	260	90	480	316	336
BND3164	23164-	H3164	500	**320**	300	1 150	359	700	300	100	540	320	340
BND2264	22264-	H3164	600	**320**	300	1 150	333	745	360	115	580	320	340
BND3264	23264-	H3264	665	**320**	300	1 150	391	745	360	115	580	320	340
BND3068	23068-	H3068	300	**340**	320	900	276	630	270	95	520	340	360
BND3168	23168-	H3168	520	**340**	320	1 150	373	745	360	115	580	340	360
BND2268	22268-	H3168	635	**340**	320	1 200	375	790	380	125	620	344	364
BND3268	23268-	H3268	755	**340**	320	1 200	434	790	380	125	620	344	364

[1] Ordering example:
Housing BND3260-H-W-T-AL-S (see also page 932),
bearing 23260-K-MB (see bearing tables), adapter sleeve H3260-HG (see dimension tables).

[2] ① Locating bearing AF
② Non-locating bearing AL
③ Locating bearing BF
④ Non-locating bearing BL

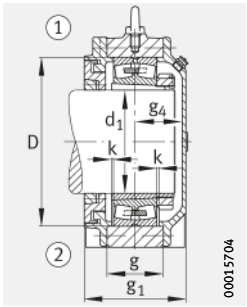

Design A

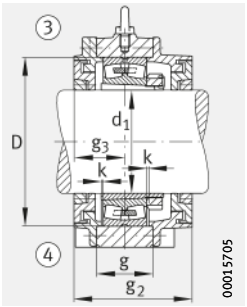

Design B

Housing with labyrinth seal
for bearings with tapered bore

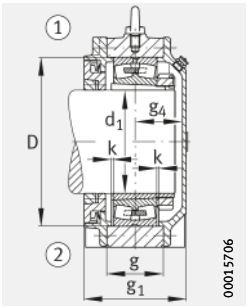

Design A

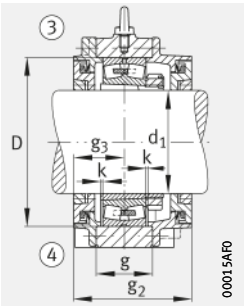

Design B

Housing with Taconite seal
for bearings with tapered bore

g	g_2	g_3	g_4 min.	g_5	h	k	m	n	u	v	s	t	s_2	
														Quantity
135	281	118	108	236	260	4	630	140	42	52	M36	460	M16	8
176	337	151	133	302	290	4	750	140	42	52	M36	510	M20	8
160	354	157	128	314	320	4	840	170	42	52	M36	555	M24	8
206	400	180	151	360	320	4	840	170	42	52	M36	555	M24	8
140	296	128	121	256	285	4	690	150	42	52	M36	510	M16	8
190	384	172	143	344	320	4	840	170	42	52	M36	555	M24	8
178	352	156	149	312	350	4	920	180	56	75	M48	600	M24	8
230	404	182	175	364	350	4	920	180	56	75	M48	600	M24	8
150	311	133	123	266	295	4	730	160	42	52	M36	530	M16	8
210	412	186	161	372	350	4	940	160	42	52	M36	590	M24	8
180	381	163	158	326	370	5	960	200	56	75	M48	640	M24	8
238	439	192	187	384	370	5	960	200	56	75	M48	640	M24	8
160	311	133	132	266	315	5	770	170	42	52	M36	565	M20	8
220	421	183	178	366	370	5	960	200	56	75	M48	640	M24	8
201	430	187,5	176	375	390	5	990	200	64	85	M56	680	M30	8
260	489	217	205	434	390	5	990	200	64	85	M56	680	M30	8

Plummer block housings

BND, unsplit
For spherical roller bearings with cylindrical bore, with tapered bore and adapter sleeve

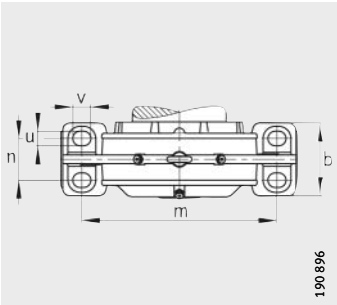

Cross-sections of bearings with cylindrical bore
see page 983

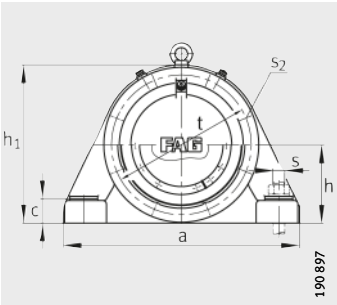

①, ②, ③, ④ [2]

Dimension table (continued) · Dimensions in mm

Designation[1]			Mass m	Dimensions									
Housing	Bearing	Adapter sleeve	Housing ≈kg	d	d_1	a	g_1	h_1	b	c	D	d_c min.	d_z min.
BND3072	23072-	H3072	330	**360**	340	960	290	660	280	100	540	360	380
BND3172	23172-	H3172	600	**360**	340	1 200	400	760	370	115	600	360	380
BND2272	22272-	H3172	690	**360**	340	1 280	375	820	400	130	650	364	384
BND3272	23272-	H3272	950	**360**	340	1 280	437	820	400	130	650	364	384
BND3076	23076-	H3076	360	**380**	360	1 000	294	680	300	105	560	380	400
BND3176	23176-	H3176	720	**380**	360	1 200	404	790	380	125	620	380	400
BND2276	22276-	H3176	900	**380**	360	1 350	433	865	405	135	680	384	404
BND3276	23276-	H3276	1 100	**380**	360	1 350	489	860	405	135	680	384	404
BND3080	23080-	H3080	400	**400**	380	1 060	310	720	320	110	600	400	420
BND3180	23180-	H3180	750	**400**	380	1 280	405	820	400	130	650	404	424
BND2280	22280-	H3180	940	**400**	380	1 430	433	900	450	145	720	404	424
BND3280	23280-	H3280	1 205	**400**	380	1 430	504	900	450	145	720	404	424
BND3084	23084-	H3084	435	**420**	400	1 100	310	755	340	115	620	420	440
BND3184	23184-	H3184	950	**420**	400	1 350	440	900	420	135	700	424	444
BND2284	22284-	H3184	1 055	**420**	400	1 500	433	950	470	150	760	430	450
BND3284	23284-	H3284	1 310	**420**	400	1 500	510	950	470	150	760	430	450

[1] Ordering example:
Housing BND3084-H-C-T-BF-S (see also page 933),
bearing 23084-B-K-MB (see bearing tables), adapter sleeve H3084X-HG (see dimension tables).

[2] ① Locating bearing AF
② Non-locating bearing AL
③ Locating bearing BF
④ Non-locating bearing BL

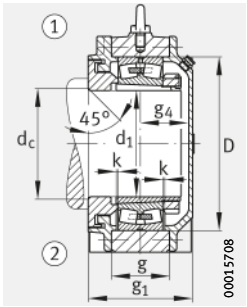

Design A

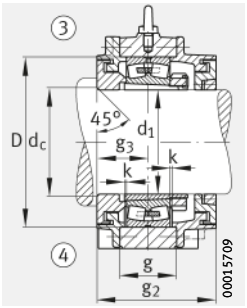

Design B

Housing with labyrinth seal for bearings
with tapered bore, shaft with abutment shoulder

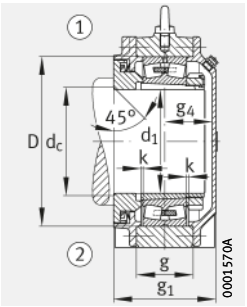

Design A

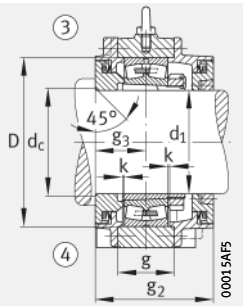

Design B

Housing with Taconite seal for bearings
with tapered bore, shaft with abutment shoulder

g	g_2	g_3	g_4 min.	g_5	h	k	m	n	u	v	s	t	s_2	
														Quantity
170	325	140	138	280	330	5	820	180	42	52	M36	590	M20	8
225	450	200	188	400	380	4	1 000	200	56	75	M48	650	M24	8
205	435	185	178	370	410	5	1 040	210	72	90	M64	710	M30	8
267	497	216	209	432	410	5	1 040	210	72	90	M64	710	M30	8
160	329	142	141	284	340	7	840	190	56	75	M48	610	M20	8
230	459	202	190	404	390	5	1 000	200	64	85	M56	680	M30	8
230	470	203	218	406	425	5	1 100	225	72	90	M64	745	M30	8
295	529	232	244	464	425	5	1 100	225	72	90	M64	745	M30	8
175	355	150	145	300	360	7	900	200	56	75	M48	650	M20	8
235	465	200	193	400	410	5	1 040	210	72	90	M64	710	M30	8
229	498	216,5	202	433	450	5	1 160	240	72	90	M64	790	M30	8
300	569	252	237	504	450	5	1 160	240	72	90	M64	790	M30	8
180	350	150	149	300	375	7	940	210	56	75	M48	670	M20	8
260	510	210	215	420	450	7	1 100	210	64	85	M56	760	M30	8
238	498	216,5	202	433	470	5	1 220	255	72	90	M64	835	M30	8
315	575	255	240	510	470	5	1 220	255	72	90	M64	835	M30	8

Plummer block housings

BNM, unsplit
For spherical roller bearings
with tapered bore
and withdrawal sleeve

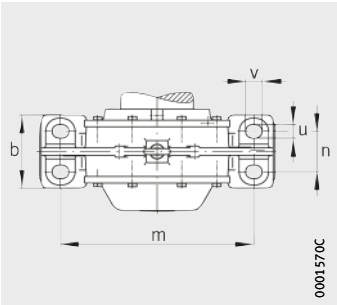

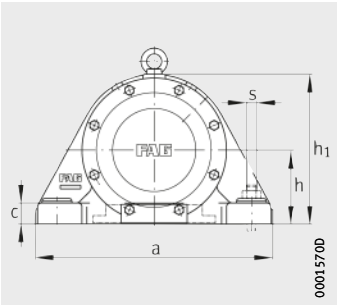

Dimension table · Dimensions in mm

Designation[1]			Mass m	Dimensions						
Housing	Bearing	Withdrawal sleeve	Housing ≈kg	d_1	a	g_1	h_1	b	c	D
BNM3236	23236-	AH3236	160	**170**	680	310	425	210	65	320
BNM3238	23238-	AH3238	180	**180**	710	325	455	220	85	340
BNM3240	23240-	AH3240	240	**190**	780	350	475	240	75	360
BNM3244	23244-	AH2344	290	**200**	850	375	525	250	80	400
BNM3248	23248-	AH2348	330	**220**	900	360	585	250	90	440
BNM3252	23252-	AH2352	480	**240**	960	415	625	290	95	480
BNM3256	23256-	AH2356	550	**260**	1 000	435	645	300	100	500
BNM3260	23260-	AH3260	660	**280**	1 100	455	705	330	105	540
BNM3264	23264-	AH3264	800	**300**	1 150	490	745	360	115	580
BNM3268	23268-	AH3268	930	**320**	1 200	515	790	380	125	620
BNM3272	23272-	AH3272	1 100	**340**	1 280	545	820	400	130	650
BNM3276	23276-	AH3276	1 210	**360**	1 350	570	860	405	135	680
BNM3280	23280-	AH3280	1 510	**380**	1 430	605	900	450	145	720
BNM3284	23284-	AH3284	1 710	**400**	1 500	615	950	470	150	760

[1] Ordering example:
Housing BNM3260-AH-R-AF (see also page 937),
bearing 23260-K-MB (see bearing tables), withdrawal sleeve AH3260G-H (see dimension tables).

[2] ① Locating bearing AF
② Non-locating bearing AL
③ Locating bearing BF
④ Non-locating bearing BL

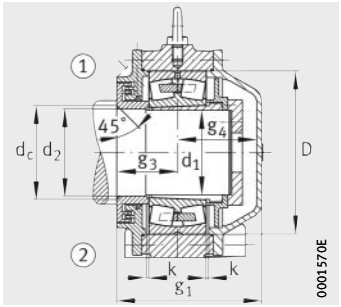

Design A
①, ② [2)]

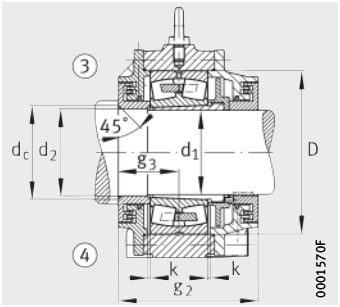

Design B
③, ④ [2)]

d_2	d_c min.	g_2	g_3	g_4 min.	h	k	m	n	u	v	s
175	185	310	135	165	210	4	550	120	36	45	M30
185	195	330	145	170	220	4	560	120	42	52	M36
195	205	350	155	185	235	4	640	140	42	52	M36
210	220	385	165	200	260	4	700	140	42	52	M36
230	242	365	155	195	290	4	750	140	42	52	M36
250	262	410	180	220	310	5	800	160	42	52	M36
270	282	440	190	230	320	5	840	170	42	52	M36
290	302	450	200	240	350	5	920	180	56	75	M48
310	326	475	210	265	370	5	960	200	56	75	M48
330	350	505	220	280	390	6	990	200	64	85	M56
350	370	535	235	295	410	6	1 040	210	72	90	M64
370	390	575	255	300	425	6	1 100	225	72	90	M64
390	410	605	270	320	450	6	1 160	240	72	90	M64
410	430	625	280	320	470	7,5	1 220	255	72	90	M64

Take-up housings

SPA, unsplit
For spherical roller bearings
with tapered bore
and adapter sleeve

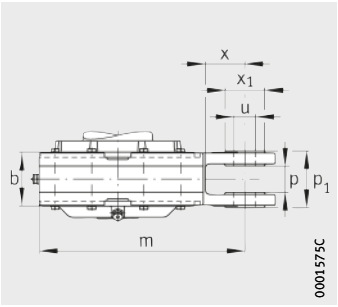

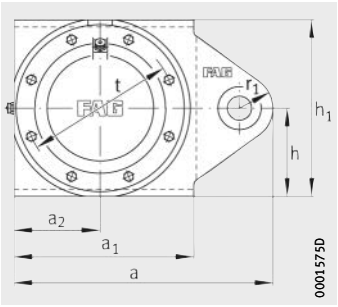

①, ②, ③, ④ [2)]

Dimension table · Dimensions in mm

Designation[1)]			Mass m	Dimensions										
Housing	Bearing	Adapter sleeve	Housing ≈kg	d_1	a	a_1	a_2	D	f	f_1	g	g_1	g_2
SPA3236	23236-	H2336	170	**160**	600	420	210	320	410	93	138	240	274
SPA3140	23140-	H3140	165	**180**	650	420	210	340	410	100	135	242	278
SPA3240	23240-	H2340	260	**180**	650	470	235	360	460	103	158	260	299
SPA3044	23044-	H3044X	180	**200**	615	430	210	340	440	65	115	206	241
SPA3144	23144-	H3144X	280	**200**	885	470	235	370	480	105	150	252	291
SPA3244	23244-	H2344X	325	**200**	940	520	260	400	500	90	175	279	329
SPA3148	23148-	H3148X	330	**220**	925	520	260	400	500	65	160	284	334
SPA3248	23248-	H2348X	430	**220**	970	560	280	440	545	95	190	308	351
SPA3052	23052-	H3052X	225	**240**	910	500	245	400	500	65	130	226	261
SPA3152	23152-	H3152X	325	**240**	990	550	275	440	540	80	174	292	335
SPA3252	23252-	H2352X	410	**240**	1 063	596	298	480	570	103	205	330	370
SPA3056	23056-	H3056	310	**260**	910	500	245	420	500	65	135	236	281
SPA3256	23256-	H2356X	520	**260**	1 095	630	315	500	610	123	206	343	400
SPA3160	23160-	H3160	440	**280**	1 115	630	315	500	610	130	190	327	384
SPA3260	23260-	H3260	620	**280**	1 200	680	340	540	650	115	230	369	404
SPA3164	23164-	H3164	560	**300**	1 140	665	340	540	630	123	210	359	412
SPA3264	23264-	H3264	810	**300**	1 280	710	355	580	670	123	238	391	439
SPA3168	23168-	H3168	630	**320**	1 290	740	370	580	700	150	220	373	421
SPA3268	23268-	H3268	920	**320**	1 335	735	385	620	700	123	260	434	489
SPA3272	23272-	H3272	885	**340**	1 390	800	400	650	790	123	267	437	497
SPA3176	23176-	H3176	700	**360**	1 325	750	375	620	740	120	230	404	459
SPA3276	23276-	H3276	900	**360**	1 385	810	405	680	780	123	295	489	529
SPA3280	23280-	H3280	1 600	**380**	1 460	880	440	720	900	190	300	504	569
SPA3284	23284-	H3284	1 800	**400**	1 488	925	465	760	900	190	315	510	575

1) Ordering example:
Housing SPA3260-H-W-Y-BF-S (see also page 939),
bearing 23260-K-MB (see bearing tables), adapter sleeve H3260-HG (see dimension tables).

2) ① Locating bearing AF
② Non-locating bearing AL
③ Locating bearing BF
④ Non-locating bearing BL

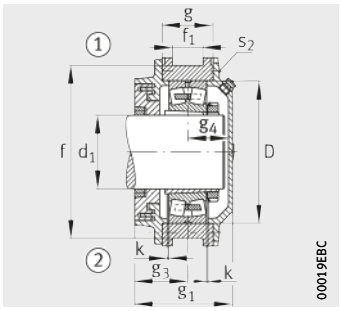

Guidance on both sides
Design A

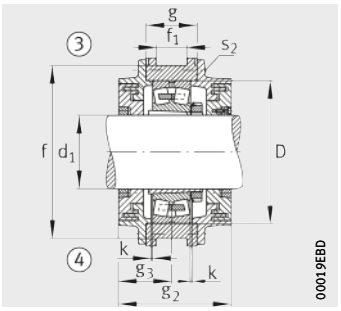

Guidance on both sides
Design B

g_3	g_4	h_1	k	m	p	p_1	r_1	t	s_2		u	x	x_1
										Quantity			
127	105	450	3	300	72	140	90	370	M16	8	80	90	120
124	108	440	3	360	70	140	80	380	M16	8	60	140	100
138	114	500	4	325	72	140	90	420	M16	8	80	85	120
103	95	480	3	325	70	200	80	375	M16	8	60	100	100
134	110	510	4	530	74	144	120	420	M16	8	100	260	140
147	122	540	4	530	130	200	150	445	M20	8	100	250	140
152	122	540	4	515	123	215	150	455	M20	8	100	250	140
158	140	580	4	540	130	220	150	510	M20	8	100	260	140
113	103	540	4	515	123	215	150	440	M16	8	100	250	140
150	132	570	4	565	135	225	150	510	M20	8	100	270	140
170	148	610	3	615	173	240	150	535	M20	8	100	300	140
118	108	540	4	515	123	215	150	460	M16	8	100	250	140
180	151	650	4	630	173	240	150	555	M24	8	100	220	140
172	143	650	4	650	170	270	150	555	M24	8	100	310	140
182	175	690	4	680	190	270	180	600	M24	8	100	310	140
186	161	670	4	650	170	240	150	590	M24	8	100	310	175
192	187	710	5	725	213	300	200	640	M24	8	110	275	170
183	178	740	5	720	180	300	200	640	M24	8	120	310	180
217	205	740	5	750	213	300	200	680	M30	8	110	310	170
216	209	830	5	765	213	330	225	710	M30	8	130	310	190
202	190	790	5	750	200	300	200	680	M30	8	110	320	170
232	244	820	5	780	213	300	200	745	M30	8	110	305	170
252	237	960	5	820	180	300	200	790	M30	8	110	350	170
255	240	960	5	825	180	300	200	835	M30	8	110	350	170

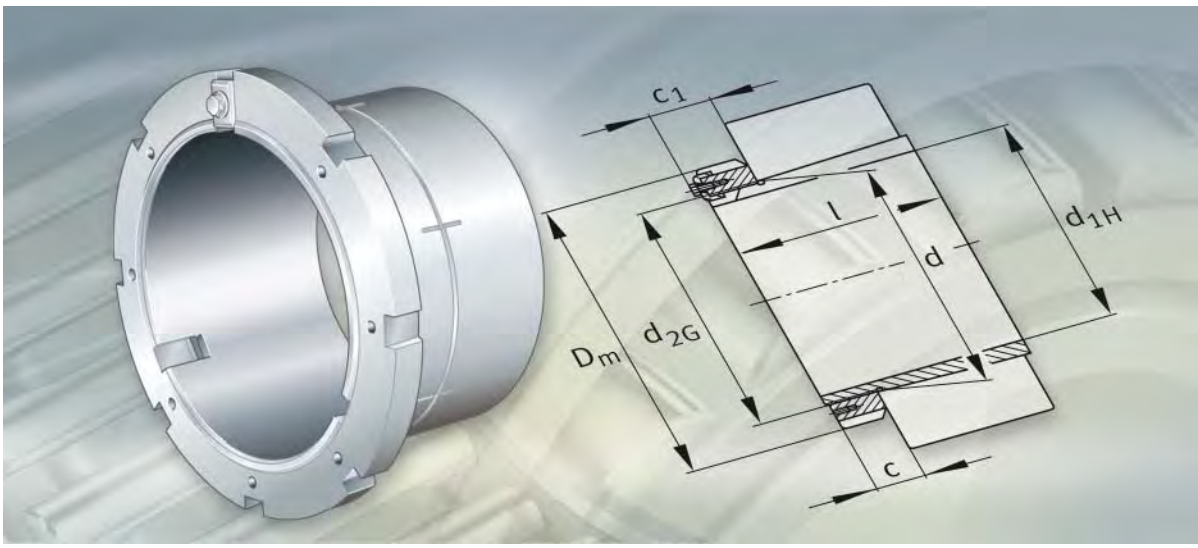

Fasteners and retainers

Adapter sleeves
Withdrawal sleeves
Locknuts
Shaft nuts
Tab washers
Retaining brackets
Hydraulic nuts

Fasteners and retainers

		Page
Product overview	Fasteners and retainers	994
Features	Adapter sleeves	996
	Withdrawal sleeves	997
	Locknuts	997
	Shaft nuts	998
	Tab washers	999
	Retaining brackets	999
	Hydraulic nuts	1000
	Suffixes	1001
Design and safety guidelines	Shaft tolerances	1002
Accuracy	Adapter sleeves	1003
	Withdrawal sleeves	1003
	Locknuts and shaft nuts	1003
	Hydraulic nuts	1003
Dimension tables	Adapter sleeves	1004
	Withdrawal sleeves	1014
	Locknuts	1030
	Shaft nuts	1033
	Tab washers	1035
	Retaining brackets	1036
	Hydraulic nuts	
	Threads in metric sizes	1038
	Threads in inch sizes	1042
	Increased capacity design	1044



Adapter sleeves

With nut and tab washer, taper 1:12 or 1:30

H23, H30, H31, H32, H33, H39, H240, H241

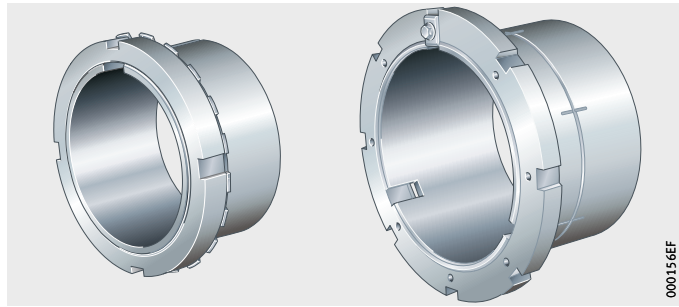

Withdrawal sleeves

Taper 1:12 or 1:30

AH22, AH(X)23, AH(X)30, AH(X)31, AH(X)32, AH33, AH38, AH39, AH240, AH241

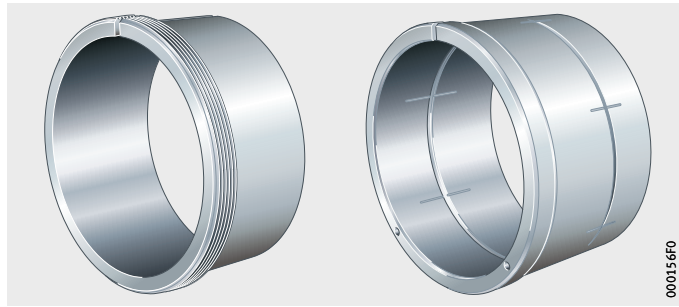

Locknuts
Shaft nuts

KM, KML, HM, HM30, HM31

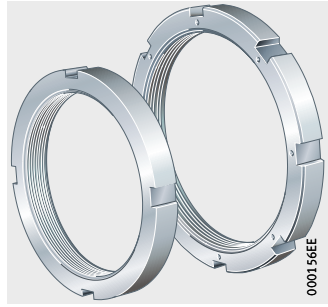

HMZ, HMZ30



Tab washers

Retaining brackets with screw

MB, MBL



MS30, MS31

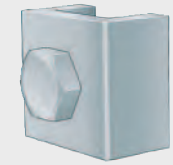

Hydraulic nuts

With thread

Increased capacity design with smooth bore

HYDNUT, HYDNUT..-INCH



HYDNUT..-HEAVY



Features

The location of bearings with a tapered bore on cylindrical shaft studs can be carried out using easy-to-fit, reliable adapter and withdrawal sleeves.

Locknuts or shaft nuts can be used to locate bearings on shafts or adapter sleeves. Gradual loosening of nuts can be prevented using tab washers or retaining brackets.
Shaft nuts are secured by means of force locking.

Adapter sleeves

For smooth and stepped shafts

Adapter sleeves are suitable where bearings with a tapered bore are to be located on cylindrical shafts. They do not need to be secured on the shaft by any additional means.
The bearings can be positioned at any point on smooth shafts.

If adapter sleeves are used with a support ring on stepped shafts, the bearings can be axially located to high accuracy.
In addition, this gives simpler dismounting of the bearings.

Adapter sleeves comprise slotted adapter sleeves, locknuts and tab washers. For larger sizes, retaining brackets are used instead of tab washers.

The tensile strength of the material is at least 430 N/mm^2.

The outside surface of the sleeves has a taper 1:12 while series H240 and H241 have a taper 1:30.

The dimension tables contain adapter sleeves for metric shafts. Sleeves for inch size shafts are available by agreement.

For hydraulic method

Mounting and dismounting of large bearings requires high mounting forces and is made easier by using the hydraulic method.
There are adapter sleeves with oil slots on the tapered outside surface and a pump connector on the thread side.
These adapter sleeves have the suffix HG.
The dimension tables describe the threads for the pump connector.

Withdrawal sleeves

Withdrawal sleeves are suitable where bearings with a tapered bore are to be located on cylindrical shafts.
The tapered sleeve is pressed into the bearing bore until the required reduction in radial internal clearance is achieved.
The bearing is abutted, for example, against a shoulder on the shaft.

Retainers are not included in the delivery.

The tensile strength of the material is at least 430 N/mm^2.

The outside surface of the slotted steel sleeves has a taper 1:12, while series AH240 and AH241 have a taper 1:30.

For hydraulic method

Mounting and dismounting of large bearings requires high mounting forces and is made easier by using the hydraulic method. There are withdrawal sleeves with oil slots on the tapered outside surface and two pump connectors offset to each other by 90°.
These withdrawal sleeves have the suffix H.
The dimension tables give the mounting dimensions for the pump connector.

Locknuts

Locknuts can be used to locate bearings on shafts or adapter sleeves. They also give easier mounting of bearings with a tapered shaft seat and the mounting and dismounting of bearings on withdrawal sleeves.

The locknuts are made from steel and the tensile strength of the material is at least 350 N/mm^2.

They have four or eight evenly spaced slots on the circumference, into which hook wrenches or striking-face wrenches can be fitted.

By agreement, locknuts of series HM30..-H, HM31..-H with threaded holes for mounting screws are available.



Shaft nuts

Shaft nuts HMZ allow precise, secure axial location of bearings on cylindrical and tapered shafts or on adapter sleeves.

The shaft nuts are made from steel and the tensile strength is at least 350 N/mm^2.

Shaft nuts HMZ are interchangeable with conventional locknuts HM and KM. They are secured, however, not by means of washers or brackets but by force locking. Four or eight axial clamping screws allow uniform clamping around the circumference, *Figure 1*.

For screw mounting on the shaft thread, the circumference of the nut has four or eight threaded blind holes into which the threaded rod also supplied is screwed. There is no need either for slots on the outside diameter of the nut or for any retainers.
Since the shaft does not have a retaining slot, it has higher strength and is more economical to manufacture.

Shaft nuts HMZ are described in TPI WL 91-8, HMZ Shaft Nuts.

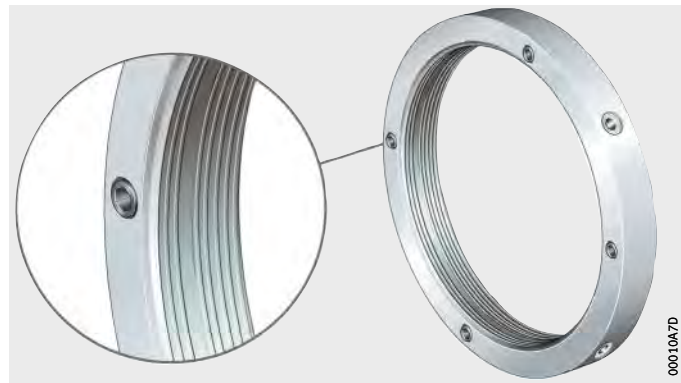

Figure 1
Clamping screws for generating a force locking connection between the nut and shaft thread

Tab washers

Tab washers MB and MBL are simple, reliable elements for securing smaller locknuts (nuts of series KM and KML).

They have an inner tab and several outer tabs evenly spaced around the circumference. The inner tab grips in the slot on the adapter sleeve or shaft, while one of the outer tabs is bent into a slot in the nut for location.

The washers are made from steel and the tensile strength is at least 300 N/mm^2.

Retaining brackets

Retaining brackets of series MS are fixed to the locknut using a hexagonal screw. They engage in a slot in the nut and in the adapter sleeve or shaft.

The fixing screw has a self-locking thread up to M16, for sizes from M20 a standardised hexagonal screw with a retainer is used.

Retaining brackets are used with locknuts of series HM30 and HM31.



Hydraulic nuts

FAG hydraulic nuts HYDNUT are used to press parts with a tapered bore onto their tapered seat. Presses are mainly used if the drive-up forces required cannot be applied using other accessories, such us shaft nuts or pressure screws.

A main area of application is the mounting of rolling bearings with a tapered bore. The bearings can be seated directly on a tapered shaft, on an adapter sleeve or a withdrawal sleeve. If the bearing is located using a withdrawal sleeve or an adapter sleeve, the hydraulic nut can also be used for dismounting.

The hydraulic nuts HYDNUT comprise a press ring and an annular piston. The piston is operated by hydraulic means. The pressure chamber is sealed by two soft PVC sealing cords mounted on rings, *Figure 2*.

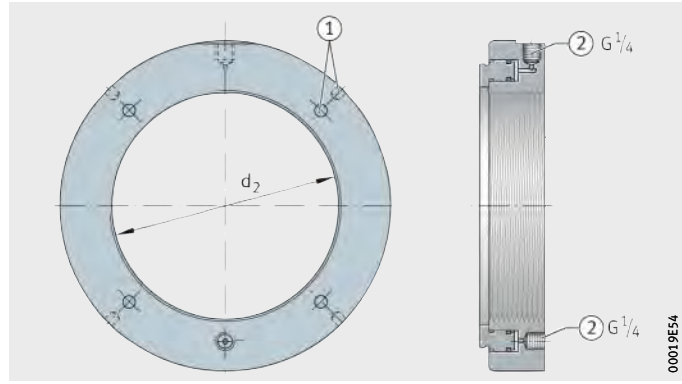

① Handling holes
② Oil connector

Figure 2
Hydraulic nuts with thread

The hydraulic nuts are designed for an oil pressure of max. 800 bar. The stroke is dimensioned such that the parts with a tapered bore can be mounted in a single operation.

Hydraulic nuts with thread

For all standardised adapter and withdrawal sleeves of metric sizes, we supply hydraulic nuts in which the bore of the press ring d_2 has a metric precision thread or a trapezoidal thread.
Designs with an inch size thread (suffix INCH) are also available.
All hydraulic nuts with a thread have holes to make handling easier.

FAG hydraulic nuts with a thread have two oil connectors G1/4 on the end face and one on the outside surface.
The second connector on the end face allows the use of a displacement gauge.

Hydraulic nuts of increased capacity design with smooth bore

Hydraulic nuts of increased capacity design for high drive-up forces, developed principally for shipbuilding, have a smooth bore.
The design is indicated by the suffix HEAVY.

We supply a comprehensive, matched range of accessories including pressure generators and connectors, see also TPI WL 195, FAG Pressure Generation Devices.
Selection of suitable products is assisted by the computer program MOUNTING MANAGER.

Hydraulic nuts HYDNUT are described in detail in TPI WL 196, FAG Hydraulic Nuts.

Suffixes

Suffixes for available designs: see table.

Available designs

Suffix	Description	Design
H	Hydraulic withdrawal sleeve	Standard
HG	Hydraulic adapter sleeve	
HEAVY	Hydraulic nut of increased capacity design	
INCH	Hydraulic nut with inch size thread	



Design and safety guidelines

Shaft tolerances

Adapter and withdrawal sleeves adapt themselves to the shaft. Larger diameter tolerances are therefore permissible for shafts than in the case of a direct cylindrical seat for a bearing on the shaft.

For general applications, bearing seats toleranced to h9 are sufficient.

The geometrical tolerances must be tighter than the diameter tolerances since the geometrical accuracy affects the running accuracy of the bearing arrangement. The cylindricity tolerance of the bearing seat should be within IT5/2 or IT6/2.

Accuracy

Adapter sleeves

The dimensions and material conform to DIN 5 415/ISO 2 982-1.

The bore tolerance of adapter sleeves before slitting for a taper 1:12 lies in tolerance zone JS9 and for a taper 1:30 in zone JS7.

Up to M200, the thread is a metric precision thread to tolerance grade 6g to DIN/ISO 965-3, over M200 trapezoidal threads are used.

Withdrawal sleeves

The dimensions and material conform to DIN 5 416/ISO 2 982-1.

The bore tolerance of adapter sleeves before slitting for a taper 1:12 lies in tolerance zone JS9 and for a taper 1:30 in zone JS7.

Up to M200, the thread is a metric precision thread to tolerance grade 6g to DIN/ISO 965-3, over M200 trapezoidal threads are used.

Designs with a modified thread d_{2G} have the suffix G.

Locknuts and shaft nuts

The dimensions and material conform to DIN 981/ISO 2 982-2.

Deviations are indicated in the dimension tables.

Up to a thread diameter 200 mm, the thread is a metric precision thread, larger locknuts and shaft nuts have trapezoidal threads.

Hydraulic nuts

FAG hydraulic nuts with a metric thread are available to fit all standardised adapter and withdrawal sleeves of metric sizes. Up to M200, the thread is a metric precision thread to DIN 13, over M200 trapezoidal threads to DIN 103 are used.

Inch size threads conform to the ABMA Standards for Bearing Mounting Accessories, Section 8, Locknuts Series N-00.



Adapter sleeves

With nut and retainer

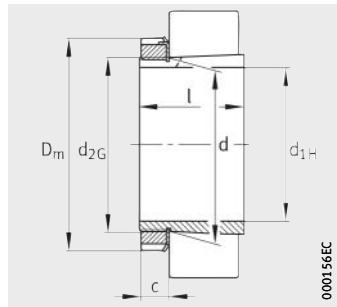

Taper 1:12
(taper 1:30 for H241)
Tab washer MB

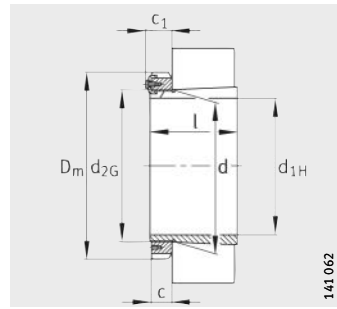

Taper 1:12
(taper 1:30 for H240)
Retaining bracket MS30

Dimension table · Dimensions in mm

Designation			Mass	Dimensions						Mounting dimensions		
Adapter sleeve Complete	Nut	Retainer	m ≈kg	d_{1H}	d	D_m ≈	l	c ≈	d_{2G}	R_0	e	t
H2330	KM30	MB30	6,76	**135**	150	195	139	26	M150X2	–	–	–
H3330	KM30	MB30	7,66	**135**	150	195	159	26	M150X2	–	–	–
H2332	KM32	MB32	9,32	**140**	160	210	147	28	M160X3	–	–	–
H2332-HG	KM32	MB32	9,32	**140**	160	210	147	28	M160X3	M6	4,2	7
H3332	KM32	MB32	10,7	**140**	160	210	170	28	M160X3	–	–	–
H3332-HG	KM32	MB32	10,7	**140**	160	210	170	28	M160X3	M6	4,2	7
H2334	KM34	MB34	10,4	**150**	170	220	154	29	M170X3	–	–	–
H2334-HG	KM34	MB34	10,4	**150**	170	220	154	29	M170X3	M6	4,2	7
H3334	KM34	MB34	11,7	**150**	170	220	175	29	M170X3	–	–	–
H3334-HG	KM34	MB34	11,7	**150**	170	220	175	29	M170X3	M6	4,2	7
H3136	KM36	MB36	9,67	**160**	180	230	131	30	M180X3	–	–	–
H3136-HG	KM36	MB36	9,67	**160**	180	230	131	30	M180X3	M6	4,2	7
H2336	KM36	MB36	11,6	**160**	180	230	161	30	M180X3	–	–	–
H2336-HG	KM36	MB36	11,6	**160**	180	230	161	30	M180X3	M6	4,2	7
H3336	KM36	MB36	13,3	**160**	180	230	186	30	M180X3	–	–	–
H3336-HG	KM36	MB36	13,3	**160**	180	230	186	30	M180X3	M6	4,2	7
H3138	KM38	MB38	11	**170**	190	240	141	31	M190X3	–	–	–
H3138-HG	KM38	MB38	11	**170**	190	240	141	31	M190X3	M6	4,2	7
H2338	KM38	MB38	12,9	**170**	190	240	169	31	M190X3	–	–	–
H2338-HG	KM38	MB38	12,9	**170**	190	240	169	31	M190X3	M6	4,2	7
H24138	KM38	MB38	11,9	**170**	190	240	172	31	M190X3	–	–	–
H24138-HG	KM38	MB38	11,9	**170**	190	240	172	31	M190X3	M6	4,2	7
H3338	KM38	MB38	14,7	**170**	190	240	193	31	M190X3	–	–	–
H3338-HG	KM38	MB38	14,7	**170**	190	240	193	31	M190X3	M6	4,2	7
H3140	KM40	MB40	12,3	**180**	200	250	150	32	M200X3	–	–	–
H3140-HG	KM40	MB40	12,3	**180**	200	250	150	32	M200X3	M6	4,2	7
H2340	KM40	MB40	14,2	**180**	200	250	176	32	M200X3	–	–	–
H2340-HG	KM40	MB40	14,2	**180**	200	250	176	32	M200X3	M6	4,2	7
H24140	KM40	MB40	13,4	**180**	200	250	185	32	M200X3	–	–	–
H24140-HG	KM40	MB40	13,4	**180**	200	250	185	32	M200X3	M6	4,2	7
H3340	KM40	MB40	16,4	**180**	200	250	204	32	M200X3	–	–	–
H3340-HG	KM40	MB40	16,4	**180**	200	250	204	32	M200X3	M6	4,2	7

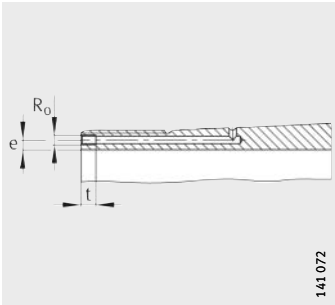

Hydraulic adapter sleeve
(suffix HG)
Mounting dimensions

Dimension table (continued) · Dimensions in mm

Designation			Mass	Dimensions							Mounting dimensions		
Adapter sleeve Complete	Nut	Retainer	m ≈kg	d_{1H}	d	D_m ≈	l	c ≈	c_1 ≈	d_{2G}	R_0	e	t
H3044X	HM3044	MS3044	10,5	**200**	220	260	126	30	40	Tr220X4	–	–	–
H3044X-HG	HM3044	MS3044	10,5	**200**	220	260	126	30	40	Tr220X4	M6	4,2	7
H24044	HM3044	MS3044	12,1	**200**	220	260	162	30	40	Tr220X4	–	–	–
H24044-HG	HM3044	MS3044	12,1	**200**	220	260	162	30	40	Tr220X4	M6	4,2	7
H3144X	HM44T	MB44	15,7	**200**	220	280	161	35	35	Tr220X4	–	–	–
H3144X-HG	HM44T	MB44	15,7	**200**	220	280	161	35	35	Tr220X4	M6	4,2	7
H2344X	HM44T	MB44	17,8	**200**	220	280	186	35	35	Tr220X4	–	–	–
H2344X-HG	HM44T	MB44	17,8	**200**	220	280	186	35	35	Tr220X4	M6	4,2	7
H24144	HM44T	MB44	17,1	**200**	220	280	199	35	35	Tr220X4	–	–	–
H24144-HG	HM44T	MB44	17,1	**200**	220	280	199	35	35	Tr220X4	M6	4,2	7
H3344	HM44T	MB44	21,1	**200**	220	280	223	35	35	Tr220X4	–	–	–
H3344-HG	HM44T	MB44	21,1	**200**	220	280	223	35	35	Tr220X4	M6	4,2	7
H3948	HM3048	MS3048	11,3	**220**	240	290	101	34	45	Tr240X4	–	–	–
H3948-HG	HM3048	MS3048	11,3	**220**	240	290	101	34	45	Tr240X4	M6	4,2	7
H3048	HM3048	MS3048	13,8	**220**	240	290	133	34	45	Tr240X4	–	–	–
H3048-HG	HM3048	MS3048	13,8	**220**	240	290	133	34	45	Tr240X4	M6	4,2	7
H24048	HM3048	MS3048	15,3	**220**	240	290	167	34	45	Tr240X4	–	–	–
H24048-HG	HM3048	MS3048	15,3	**220**	240	290	167	34	45	Tr240X4	M6	4,2	7
H3148X	HM48T	MB48	18,4	**220**	240	300	172	37	37	Tr240X4	–	–	–
H3148X-HG	HM48T	MB48	18,4	**220**	240	300	172	37	37	Tr240X4	M6	4,2	7
H2348X	HM48T	MB48	20,9	**220**	240	300	199	37	37	Tr240X4	–	–	–
H2348X-HG	HM48T	MB48	20,9	**220**	240	300	199	37	37	Tr240X4	M6	4,2	7
H24148	HM48T	MB48	19,9	**220**	240	300	212	37	37	Tr240X4	–	–	–
H24148-HG	HM48T	MB48	19,9	**220**	240	300	212	37	37	Tr240X4	M6	4,2	7
H3348	HM48T	MB48	25,1	**220**	240	300	240	37	37	Tr240X4	–	–	–
H3348-HG	HM48T	MB48	25,1	**220**	240	300	240	37	37	Tr240X4	M6	4,2	7

Adapter sleeves

With nut and retainer

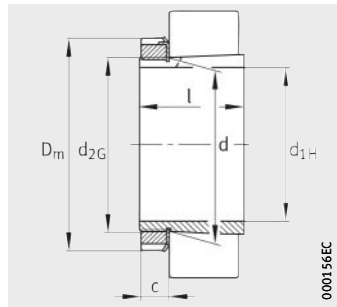

Taper 1:12
(taper 1:30 for H241)
Tab washer MB

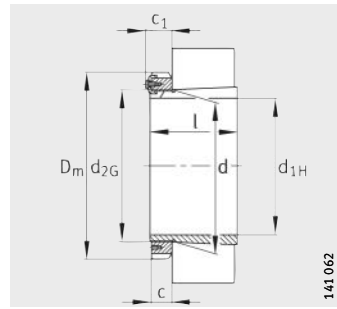

Taper 1:12
(taper 1:30 for H240, H241)
Retaining bracket MS30, MS31

Dimension table (continued) · Dimensions in mm

Designation			Mass	Dimensions							Mounting dimensions		
Adapter sleeve Complete	Nut	Retainer	m ≈kg	d_{1H}	d	D_m ≈	l	c ≈	c_1 ≈	d_{2G}	R_0	e	t
H3952	HM3052	MS3048	13,6	**240**	260	310	116	34	45	Tr260X4	–	–	–
H3952-HG	HM3052	MS3048	13,6	**240**	260	310	116	34	45	Tr260X4	M6	4,2	7
H3052X	HM3052	MS3048	16	**240**	260	310	145	34	45	Tr260X4	–	–	–
H3052X-HG	HM3052	MS3048	16	**240**	260	310	145	34	45	Tr260X4	M6	4,2	7
H24052	HM3052	MS3048	18,4	**240**	260	310	190	34	45	Tr260X4	–	–	–
H24052-HG	HM3052	MS3048	18,4	**240**	260	310	190	34	45	Tr260X4	M6	4,2	7
H3152X	HM52T	MB52	23,5	**240**	260	330	190	38	38	Tr260X4	–	–	–
H3152X-HG	HM52T	MB52	23,5	**240**	260	330	190	38	38	Tr260X4	M6	4,2	7
H2352X	HM52T	MB52	25,7	**240**	260	330	211	38	38	Tr260X4	–	–	–
H2352X-HG	HM52T	MB52	25,7	**240**	260	330	211	38	38	Tr260X4	M6	4,2	7
H24152	HM52T	MB52	25,2	**240**	260	330	235	38	38	Tr260X4	–	–	–
H24152-HG	HM52T	MB52	25,2	**240**	260	330	235	38	38	Tr260X4	M6	4,2	7
H3352	HM52T	MB52	30,5	**240**	260	330	253	38	38	Tr260X4	–	–	–
H3352-HG	HM52T	MB52	30,5	**240**	260	330	253	38	38	Tr260X4	M6	4,2	7
H3956	HM3056	MS3056	15,6	**260**	280	330	121	38	49	Tr280X4	–	–	–
H3956-HG	HM3056	MS3056	15,6	**260**	280	330	121	38	49	Tr280X4	M6	4,2	7
H3056	HM3056	MS3056	18,5	**260**	280	330	152	38	49	Tr280X4	–	–	–
H3056-HG	HM3056	MS3056	18,5	**260**	280	330	152	38	49	Tr280X4	M6	4,2	7
H24056	HM3056	MS3056	20,9	**260**	280	330	195	38	49	Tr280X4	–	–	–
H24056-HG	HM3056	MS3056	20,9	**260**	280	330	195	38	49	Tr280X4	M6	4,2	7
H3156X	HM56T	MB56	26,4	**260**	280	350	195	39	39	Tr280X4	–	–	–
H3156X-HG	HM56T	MB56	26,4	**260**	280	350	195	39	39	Tr280X4	M6	4,2	7
H2356X	HM56T	MB56	29,8	**260**	280	350	224	39	39	Tr280X4	–	–	–
H2356X-HG	HM56T	MB56	29,8	**260**	280	350	224	39	39	Tr280X4	M6	4,2	7
H24156	HM56T	MB56	28	**260**	280	350	238	39	39	Tr280X4	–	–	–
H24156-HG	HM56T	MB56	28	**260**	280	350	238	39	39	Tr280X4	M6	4,2	7
H3356	HM56T	MB56	36	**260**	280	350	273	39	39	Tr280X4	–	–	–
H3356-HG	HM56T	MB56	36	**260**	280	350	273	39	39	Tr280X4	M6	4,2	7

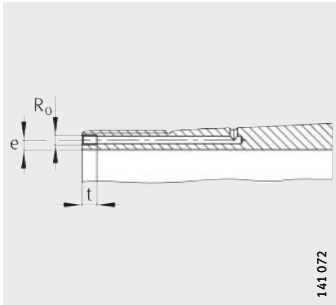

Hydraulic adapter sleeve
(suffix HG)
Mounting dimensions

Dimension table (continued) · Dimensions in mm

Designation			Mass	Dimensions							Mounting dimensions		
Adapter sleeve Complete	Nut	Retainer	m ≈kg	d_{1H}	d	D_m ≈	l	c ≈	c_1 ≈	d_{2G}	R_0	e	t
H3960	HM3060	MS3060	20,9	**280**	300	360	140	42	53	Tr300X4	–	–	–
H3960-HG	HM3060	MS3060	20,9	**280**	300	360	140	42	53	Tr300X4	M6	4,2	7
H3060	HM3060	MS3060	23,8	**280**	300	360	168	42	53	Tr300X4	–	–	–
H3060-HG	HM3060	MS3060	23,8	**280**	300	360	168	42	53	Tr300X4	M6	4,2	7
H24060	HM3060	MS3060	26,9	**280**	300	360	220	42	53	Tr300X4	–	–	–
H24060-HG	HM3060	MS3060	26,9	**280**	300	360	220	42	53	Tr300X4	M6	4,2	7
H3160	HM3160	MS3160	30,6	**280**	300	380	208	40	53	Tr300X4	–	–	–
H3160-HG	HM3160	MS3160	30,6	**280**	300	380	208	40	53	Tr300X4	M6	4,2	7
H3260	HM3160	MS3160	34,7	**280**	300	380	240	40	53	Tr300X4	–	–	–
H3260-HG	HM3160	MS3160	34,7	**280**	300	380	240	40	53	Tr300X4	M6	4,2	7
H24160	HM3160	MS3160	32,7	**280**	300	380	258	40	53	Tr300X4	–	–	–
H24160-HG	HM3160	MS3160	32,7	**280**	300	380	258	40	53	Tr300X4	M6	4,2	7
H3360	HM3160	MS3160	40,8	**280**	300	380	284	40	53	Tr300X4	–	–	–
H3360-HG	HM3160	MS3160	40,8	**280**	300	380	284	40	53	Tr300X4	M6	4,2	7
H3964-HG	HM3064	MS3064	22	**300**	320	380	140	42	56	Tr320X5	M6	3,5	7
H3064-HG	HM3064	MS3064	25,4	**300**	320	380	171	42	56	Tr320X5	M6	3,5	7
H24064-HG	HM3064	MS3064	28,4	**300**	320	380	220	42	56	Tr320X5	M6	3,5	7
H3164-HG	HM3164	MS3164	35,4	**300**	320	400	226	42	56	Tr320X5	M6	3,5	7
H3264-HG	HM3164	MS3164	40	**300**	320	400	258	42	56	Tr320X5	M6	3,5	7
H24164-HG	HM3164	MS3164	37,4	**300**	320	400	278	42	56	Tr320X5	M6	3,5	7
H3364-HG	HM3164	MS3164	47,8	**300**	320	400	308	42	56	Tr320X5	M6	3,5	7
H3968-HG	HM3068	MS3064	24,8	**320**	340	400	144	45	57	Tr340X5	M6	3,5	7
H3068-HG	HM3068	MS3064	30	**320**	340	400	187	45	57	Tr340X5	M6	3,5	7
H24068-HG	HM3068	MS3064	33,8	**320**	340	400	244	45	57	Tr340X5	M6	3,5	7
H3168-HG	HM3168	MS3168	50,1	**320**	340	440	254	55	70	Tr340X5	M6	3,5	7
H3268-HG	HM3168	MS3168	55,4	**320**	340	440	288	55	70	Tr340X5	M6	3,5	7
H24168-HG	HM3168	MS3168	53	**320**	340	440	317	55	70	Tr340X5	M6	3,5	7
H3368-HG	HM3168	MS3168	63,6	**320**	340	440	336	55	70	Tr340X5	M6	3,5	7
H3972-HG	HM3072	MS3072	25,9	**340**	360	420	144	45	57	Tr360X5	M6	3,5	7
H3072-HG	HM3072	MS3072	31,6	**340**	360	420	188	45	57	Tr360X5	M6	3,5	7
H24072-HG	HM3072	MS3072	35,5	**340**	360	420	244	45	57	Tr360X5	M6	3,5	7
H3172-HG	HM3172	MS3168	54,3	**340**	360	460	259	58	73	Tr360X5	M6	3,5	7
H3272-HG	HM3172	MS3168	61	**340**	360	460	299	58	73	Tr360X5	M6	3,5	7
H24172-HG	HM3172	MS3168	57,1	**340**	360	460	321	58	73	Tr360X5	M6	3,5	7
H3372-HG	HM3172	MS3168	71,8	**340**	360	460	357	58	73	Tr360X5	M6	3,5	7

Adapter sleeves

With nut and retainer

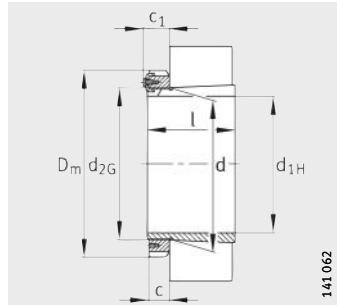

Taper 1:12
(taper 1:30 for H240, H241)
Retaining bracket MS30, MS31

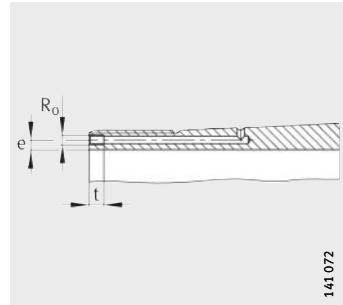

Hydraulic adapter sleeve
(suffix HG)
Mounting dimensions

Dimension table (continued) · Dimensions in mm

Designation			Mass	Dimensions							Mounting dimensions		
Adapter sleeve Complete	Nut	Retainer	m ≈kg	d_{1H}	d	D_m ≈	l	c ≈	c_1 ≈	d_{2G}	R_0	e	t
H3976-HG	HM3076	MS3076	32,1	**360**	380	450	164	48	62	Tr380X5	M6	3,5	7
H3076-HG	HM3076	MS3076	36,2	**360**	380	450	193	48	62	Tr380X5	M6	3,5	7
H24076-HG	HM3076	MS3076	40,1	**360**	380	450	248	48	62	Tr380X5	M6	3,5	7
H3176-HG	HM3176	MS3176	62,4	**360**	380	490	264	60	75	Tr380X5	M6	3,5	7
H3276-HG	HM3176	MS3176	70,7	**360**	380	490	310	60	75	Tr380X5	M6	3,5	7
H24176-HG	HM3176	MS3176	64,9	**360**	380	490	323	60	75	Tr380X5	M6	3,5	7
H3376-HG	HM3176	MS3176	82,8	**360**	380	490	370	60	75	Tr380X5	M6	3,5	7
H3980-HG	HM3080	MS3076	35,4	**380**	400	470	168	52	66	Tr400X5	M6	3,5	7
H3080-HG	HM3080	MS3076	41,7	**380**	400	470	210	52	66	Tr400X5	M6	3,5	7
H24080-HG	HM3080	MS3076	46,4	**380**	400	470	272	52	66	Tr400X5	M6	3,5	7
H3180-HG	HM3180	MS3180	71,3	**380**	400	520	272	62	81	Tr400X5	M6	3,5	7
H3280-HG	HM3180	MS3180	82,1	**380**	400	520	328	62	81	Tr400X5	M6	3,5	7
H24180-HG	HM3180	MS3180	73,8	**380**	400	520	332	62	81	Tr400X5	M6	3,5	7
H3380-HG	HM3180	MS3180	93,4	**380**	400	520	380	62	81	Tr400X5	M6	3,5	7
H3984-HG	HM3084	MS3084	36,9	**400**	420	490	168	52	66	Tr420X5	M6	3,5	7
H3084X-HG	HM3084	MS3084	43,8	**400**	420	490	212	52	66	Tr420X5	M6	3,5	7
H24084-HG	HM3084	MS3084	48,6	**400**	420	490	274	52	66	Tr420X5	M6	3,5	7
H3184-HG	HM3184	MS3180	85,1	**400**	420	540	304	70	89	Tr420X5	M6	3,5	7
H3284-HG	HM3184	MS3180	95,3	**400**	420	540	352	70	89	Tr420X5	M6	3,5	7
H24184-HG	HM3184	MS3180	87,8	**400**	420	540	372	70	89	Tr420X5	M6	3,5	7
H3384-HG	HM3184	MS3180	105	**400**	420	540	395	70	89	Tr420X5	M6	3,5	7
H3988-HG	HM3088	MS3088	59	**410**	440	520	189	60	75	Tr440X5	M8	6,5	12
H3088-HG	HM3088	MS3088	67,7	**410**	440	520	228	60	75	Tr440X5	M8	6,5	12
H24088-HG	HM3088	MS3088	76,4	**410**	440	520	294	60	75	Tr440X5	M8	6,5	12
H3188-HG	HM3188	MS3188	105	**410**	440	560	307	70	89	Tr440X5	M8	6,5	12
H3288-HG	HM3188	MS3188	120	**410**	440	560	361	70	89	Tr440X5	M8	6,5	12
H24188-HG	HM3188	MS3188	111	**410**	440	560	372	70	89	Tr440X5	M8	6,5	12
H3388-HG	HM3188	MS3188	140	**410**	440	560	426	70	89	Tr440X5	M8	6,5	12
H3992-HG	HM3092	MS3088	61,4	**430**	460	540	189	60	75	Tr460X5	M8	6,5	12
H3092-HG	HM3092	MS3088	71,8	**430**	460	540	234	60	75	Tr460X5	M8	6,5	12
H24092-HG	HM3092	MS3088	80,8	**430**	460	540	300	60	75	Tr460X5	M8	6,5	12
H3192-HG	HM3192	MS3188	118	**430**	460	580	326	75	94	Tr460X5	M8	6,5	12
H3292-HG	HM3192	MS3188	134	**430**	460	580	382	75	94	Tr460X5	M8	6,5	12
H24192-HG	HM3192	MS3188	124	**430**	460	580	398	75	94	Tr460X5	M8	6,5	12
H3392-HG	HM3192	MS3188	157	**430**	460	580	451	75	94	Tr460X5	M8	6,5	12

Dimension table (continued) · Dimensions in mm

Designation			Mass	Dimensions							Mounting dimensions		
Adapter sleeve Complete	Nut	Retainer	m ≈kg	d_{1H}	d	D_m ≈	l	c ≈	c_1 ≈	d_{2G}	R_0	e	t
H3996-HG	HM3096	MS3096	66,8	**450**	480	560	200	60	75	Tr480X5	M8	6,5	12
H3096-HG	HM3096	MS3096	75,9	**450**	480	560	237	60	75	Tr480X5	M8	6,5	12
H24096-HG	HM3096	MS3096	84,7	**450**	480	560	301	60	75	Tr480X5	M8	6,5	12
H3196-HG	HM3196	MS3196	135	**450**	480	620	335	75	94	Tr480X5	M8	6,5	12
H3296-HG	HM3196	MS3196	155	**450**	480	620	397	75	94	Tr480X5	M8	6,5	12
H24196-HG	HM3196	MS3196	142	**450**	480	620	408	75	94	Tr480X5	M8	6,5	12
H3396-HG	HM3196	MS3196	177	**450**	480	620	462	75	94	Tr480X5	M8	6,5	12
H39/500-HG	HM30/500	MS3096	75,2	**470**	500	580	208	68	83	Tr500X5	M8	6,5	12
H30/500-HG	HM30/500	MS3096	85,2	**470**	500	580	247	68	83	Tr500X5	M8	6,5	12
H240/500-HG	HM30/500	MS3096	93,8	**470**	500	580	309	68	83	Tr500X5	M8	6,5	12
H31/500-HG	HM31/500	MS31/500	145	**470**	500	630	356	80	99	Tr500X5	M8	6,5	12
H32/500-HG	HM31/500	MS31/500	170	**470**	500	630	428	80	99	Tr500X5	M8	6,5	12
H241/500-HG	HM31/500	MS31/500	151	**470**	500	630	430	80	99	Tr500X5	M8	6,5	12
H33/500-HG	HM31/500	MS31/500	189	**470**	500	630	480	80	99	Tr500X5	M8	6,5	12
H39/530-HG	HM30/530	MS30/530	89	**500**	530	630	216	68	89	Tr530X6	M8	6	12
H30/530-HG	HM30/530	MS30/530	103	**500**	530	630	265	68	89	Tr530X6	M8	6	12
H240/530-HG	HM30/530	MS30/530	115	**500**	530	630	343	68	89	Tr530X6	M8	6	12
H31/530-HG	HM31/530	MS31/530	161	**500**	530	670	364	80	102	Tr530X6	M8	6	12
H241/530-HG	HM31/530	MS31/530	167	**500**	530	670	440	80	102	Tr530X6	M8	6	12
H32/530-HG	HM31/530	MS31/530	192	**500**	530	670	447	80	102	Tr530X6	M8	6	12
H33/530-HG	HM31/530	MS31/530	215	**500**	530	670	504	80	102	Tr530X6	M8	6	12
H39/560-HG	HM30/560	MS30/560	95,6	**530**	560	650	227	75	96	Tr560X6	M8	6	12
H30/560-HG	HM30/560	MS30/560	112	**530**	560	650	282	75	96	Tr560X6	M8	6	12
H240/560-HG	HM30/560	MS30/560	124	**530**	560	650	358	75	96	Tr560X6	M8	6	12
H31/560-HG	HM31/560	MS31/560	184	**530**	560	710	377	85	107	Tr560X6	M8	6	12
H32/560-HG	HM31/560	MS31/560	218	**530**	560	710	462	85	107	Tr560X6	M8	6	12
H241/560-HG	HM31/560	MS31/560	195	**530**	560	710	468	85	107	Tr560X6	M8	6	12
H33/560-HG	HM31/560	MS31/560	250	**530**	560	710	535	85	107	Tr560X6	M8	6	12
H39/600-HG	HM30/600	MS30/530	129	**560**	600	700	239	75	96	Tr600X6	G1/8	8	12
H30/600-HG	HM30/600	MS30/530	149	**560**	600	700	289	75	96	Tr600X6	G1/8	8	12
H240/600-HG	HM30/600	MS30/530	171	**560**	600	700	377	75	96	Tr600X6	G1/8	8	12
H31/600-HG	HM31/600	MS31/560	234	**560**	600	750	399	85	107	Tr600X6	G1/8	8	12
H32/600-HG	HM31/600	MS31/560	279	**560**	600	750	487	85	107	Tr600X6	G1/8	8	12
H241/600-HG	HM31/600	MS31/560	249	**560**	600	750	490	85	107	Tr600X6	G1/8	8	12
H33/600-HG	HM31/600	MS31/560	320	**560**	600	750	561	85	107	Tr600X6	G1/8	8	12

Adapter sleeves

With nut and retainer

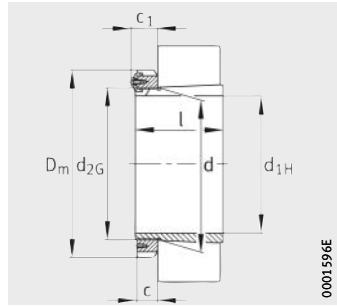

Taper 1:12
(taper 1:30 for H240, H241, H248, H249)

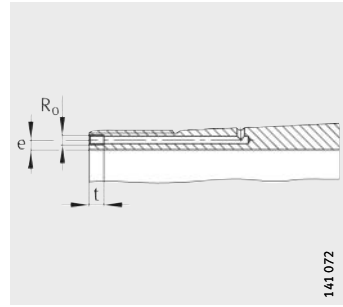

Hydraulic adapter sleeve
(suffix HG)
Mounting dimensions

Dimension table (continued) · Dimensions in mm

Designation			Mass	Dimensions							Mounting dimensions		
Adapter sleeve Complete	Nut	Retainer	m ≈kg	d_{1H}	d	D_m ≈	l	c ≈	c_1 ≈	d_{2G}	R_0	e	t
H39/630-HG	HM30/630	MS30/630	123	**600**	630	730	254	75	96	Tr630X6	M8	6	12
H30/630-HG	HM30/630	MS30/630	139	**600**	630	730	301	75	96	Tr630X6	M8	6	12
H240/630-HG	HM30/630	MS30/630	157	**600**	630	730	395	75	96	Tr630X6	M8	6	12
H31/630-HG	HM31/630	MS31/630	251	**600**	630	800	424	95	117	Tr630X6	M8	6	12
H32/630-HG	HM31/630	MS31/630	297	**600**	630	800	521	95	117	Tr630X6	M8	6	12
H241/630-HG	HM31/630	MS31/630	263	**600**	630	800	525	95	117	Tr630X6	M8	6	12
H33/630-HG	HM31/630	MS31/630	338	**600**	630	800	597	95	117	Tr630X6	M8	6	12
H39/670-HG	HM30/670	MS30/670	166	**630**	670	780	264	80	101	Tr670X6	G1/8	8	12
H30/670-HG	HM30/670	MS30/670	194	**630**	670	780	324	80	101	Tr670X6	G1/8	8	12
H240/670-HG	HM30/670	MS30/670	218	**630**	670	780	418	80	101	Tr670X6	G1/8	8	12
H31/670-HG	HM31/670	MS31/670	341	**630**	670	850	456	106	128	Tr670X6	G1/8	8	12
H241/670-HG	HM31/670	MS31/670	355	**630**	670	850	548	106	128	Tr670X6	G1/8	8	12
H32/670-HG	HM31/670	MS31/670	402	**630**	670	850	558	106	128	Tr670X6	G1/8	8	12
H33/670-HG	HM31/670	MS31/670	453	**630**	670	850	635	106	128	Tr670X6	G1/8	8	12
H39/710-HG	HM30/710	MS30/710	200	**670**	710	830	286	90	111	Tr710X7	G1/8	8	12
H30/710-HG	HM30/710	MS30/710	228	**670**	710	830	342	90	111	Tr710X7	G1/8	8	12
H240/710-HG	HM30/710	MS30/710	254	**670**	710	830	438	90	111	Tr710X7	G1/8	8	12
H31/710-HG	HM31/710	MS31/710	376	**670**	710	900	467	106	131	Tr710X7	G1/8	8	12
H32/710-HG	HM31/710	MS31/710	444	**670**	710	900	572	106	131	Tr710X7	G1/8	8	12
H241/710-HG	HM31/710	MS31/710	397	**670**	710	900	577	106	131	Tr710X7	G1/8	8	12
H33/710-HG	HM31/710	MS31/710	501	**670**	710	900	652	106	131	Tr710X7	G1/8	8	12
H39/750-HG	HM30/750	MS30/750	213	**710**	750	870	291	90	111	Tr750X7	G1/8	8	12
H240/750-HG	HM30/750	MS30/750	236	**710**	750	870	367	90	111	Tr750X7	G1/8	8	12
H30/750-HG	HM30/750	MS30/750	248	**710**	750	870	356	90	111	Tr750X7	G1/8	8	12
H240/750-HG	HM30/750	MS30/750	278	**710**	750	870	460	90	111	Tr750X7	G1/8	8	12
H31/750-HG	HM31/750	MS31/750	432	**710**	750	950	493	112	137	Tr750X7	G1/8	8	12
H32/750-HG	HM31/750	MS31/750	508	**710**	750	950	603	112	137	Tr750X7	G1/8	8	12
H241/750-HG	HM31/750	MS31/750	461	**710**	750	950	622	112	137	Tr750X7	G1/8	8	12
H33/750-HG	HM31/750	MS31/750	574	**710**	750	950	688	112	137	Tr750X7	G1/8	8	12
H39/800-HG	HM30/800	MS30/750	263	**750**	800	920	303	90	111	Tr800X7	G1/8	10	12
H30/800-HG	HM30/800	MS30/750	305	**750**	800	920	366	90	111	Tr800X7	G1/8	10	12
H240/800-HG	HM30/800	MS30/750	349	**750**	800	920	475	90	111	Tr800X7	G1/8	10	12
H31/800-HG	HM31/800	MS31/750	515	**750**	800	1 000	505	112	137	Tr800X7	G1/8	10	12
H32/800-HG	HM31/800	MS31/750	611	**750**	800	1 000	618	112	137	Tr800X7	G1/8	10	12
H241/800-HG	HM31/800	MS31/750	552	**750**	800	1 000	627	112	137	Tr800X7	G1/8	10	12
H33/800-HG	HM31/800	MS31/750	716	**750**	800	1 000	730	112	137	Tr800X7	G1/8	10	12

Dimension table (continued) · Dimensions in mm

Designation			Mass	Dimensions							Mounting dimensions		
Adapter sleeve Complete	Nut	Retainer	m ≈kg	d_{1H}	d	D_m ≈	l	c ≈	c_1 ≈	d_{2G}	R_0	e	t
H39/850-HG	HM30/850	MS30/850	292	**800**	850	980	308	90	115	Tr850X7	G1/8	10	12
H30/850-HG	HM30/850	MS30/850	344	**800**	850	980	380	90	115	Tr850X7	G1/8	10	12
H240/850-HG	HM30/850	MS30/850	393	**800**	850	980	495	90	115	Tr850X7	G1/8	10	12
H31/850-HG	HM31/850	MS31/850	590	**800**	850	1 060	536	118	143	Tr850X7	G1/8	10	12
H32/850-HG	HM31/850	MS31/850	696	**800**	850	1 060	651	118	143	Tr850X7	G1/8	10	12
H241/850-HG	HM31/850	MS31/850	624	**800**	850	1 060	658	118	143	Tr850X7	G1/8	10	12
H33/850-HG	HM31/850	MS31/850	814	**800**	850	1 060	766	118	143	Tr850X7	G1/8	10	12
H39/900-HG	HM30/900	MS30/850	335	**850**	900	1 030	326	100	122	Tr900X7	G1/8	10	12
H240/900-HG	HM30/900	MS30/850	364	**850**	900	1 030	410	100	122	Tr900X7	G1/8	10	12
H30/900-HG	HM30/900	MS30/850	392	**850**	900	1 030	400	100	122	Tr900X7	G1/8	10	12
H240/900-HG	HM30/900	MS30/850	446	**850**	900	1 030	520	100	122	Tr900X7	G1/8	10	12
H31/900-HG	HM31/900	MS31/900	674	**850**	900	1 120	557	125	150	Tr900X7	G1/8	10	12
H32/900-HG	HM31/900	MS31/900	775	**850**	900	1 120	660	125	150	Tr900X7	G1/8	10	12
H241/900-HG	HM31/900	MS31/900	712	**850**	900	1 120	685	125	150	Tr900X7	G1/8	10	12
H33/900-HG	HM31/900	MS31/900	923	**850**	900	1 120	795	125	150	Tr900X7	G1/8	10	12
H39/950-HG	HM30/950	MS30/950	369	**900**	950	1 080	344	100	122	Tr950X8	G1/8	10	12
H30/950-HG	HM30/950	MS30/950	432	**900**	950	1 080	420	100	122	Tr950X8	G1/8	10	12
H240/950-HG	HM30/950	MS30/950	499	**900**	950	1 080	557	100	122	Tr950X8	G1/8	10	12
H31/950-HG	HM31/950	MS31/950	738	**900**	950	1 170	583	125	150	Tr950X8	G1/8	10	12
H32/950-HG	HM31/950	MS31/950	835	**900**	950	1 170	675	125	150	Tr950X8	G1/8	10	12
H241/950-HG	HM31/950	MS31/950	776	**900**	950	1 170	715	125	150	Tr950X8	G1/8	10	12
H33/950-HG	HM31/950	MS31/950	1 000	**900**	950	1 170	815	125	150	Tr950X8	G1/8	10	12
H39/1000-HG	HM30/1000	MS30/1000	410	**950**	1 000	1 140	358	100	122	Tr1000X8	G1/8	10	12
H30/1000-HG	HM30/1000	MS30/1000	474	**950**	1 000	1 140	430	100	122	Tr1000X8	G1/8	10	12
H240/1000-HG	HM30/1000	MS30/1000	539	**950**	1 000	1 140	562	100	122	Tr1000X8	G1/8	10	12
H31/1000-HG	HM31/1000	MS31/1000	840	**950**	1 000	1 240	609	125	150	Tr1000X8	G1/8	10	12
H32/1000-HG	HM31/1000	MS31/1000	952	**950**	1 000	1 240	707	125	150	Tr1000X8	G1/8	10	12
H241/1000-HG	HM31/1000	MS31/1000	886	**950**	1 000	1 240	755	125	150	Tr1000X8	G1/8	10	12
H33/1000-HG	HM31/1000	MS31/1000	1 140	**950**	1 000	1 240	857	125	150	Tr1000X8	G1/8	10	12



Adapter sleeves

With nut and retainer

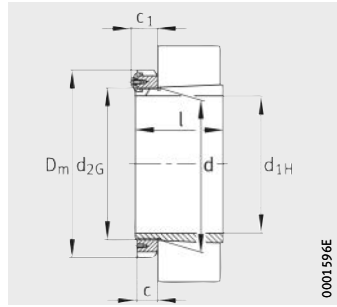

Taper 1:12
(taper 1:30 for H240, H241, H248, H249)

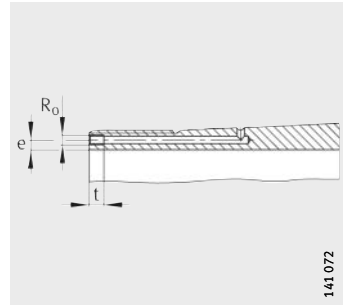

Hydraulic adapter sleeve
(suffix HG)
Mounting dimensions

Dimension table (continued) · Dimensions in mm

Designation			Mass	Dimensions							Mounting dimensions		
Adapter sleeve Complete	Nut	Retainer	m ≈kg	d_{1H}	d	D_m ≈	l	c ≈	c_1 ≈	d_{2G}	R_0	e	t
H39/1060-HG	HM30/1060	MS30/1000	493	**1 000**	1 060	1 200	372	100	122	Tr1060X8	G1/4	12	15
H30/1060-HG	HM30/1060	MS30/1000	574	**1 000**	1 060	1 200	447	100	122	Tr1060X8	G1/4	12	15
H240/1060-HG	HM30/1060	MS30/1000	665	**1 000**	1 060	1 200	588	100	122	Tr1060X8	G1/4	12	15
H31/1060-HG	HM31/1060	MS31/1000	985	**1 000**	1 060	1 300	622	125	150	Tr1060X8	G1/4	12	15
H241/1060-HG	HM31/1060	MS31/1000	1 060	**1 000**	1 060	1 300	775	125	150	Tr1060X8	G1/4	12	15
H248/1060-HG	Z-195070.0	MS30/560	263	**1 020**	1 060	1 150	335	80	101	Tr1060X8	G1/8	9	12
H39/1120-HG	HM30/1120	MS30/1000	521	**1 060**	1 120	1 260	372	100	122	Tr1120X8	G1/4	12	15
H30/1120-HG	HM30/1120	MS30/1000	631	**1 060**	1 120	1 260	467	100	122	Tr1120X8	G1/4	12	15
H240/1120-HG	HM30/1120	MS30/1000	728	**1 060**	1 120	1 260	612	100	122	Tr1120X8	G1/4	12	15
H31/1120-HG	HM31/1120	MS31/1000	1 060	**1 060**	1 120	1 360	622	125	150	Tr1120X8	G1/4	12	15
H241/1120-HG	HM31/1120	MS31/1000	1 170	**1 060**	1 120	1 360	805	125	150	Tr1120X8	G1/4	13	15
H39/1180-HG	HM30/1180	MS30/1000	576	**1 120**	1 180	1 320	394	100	122	Tr1180X8	G1/4	12	15
H30/1180-HG	HM30/1180	MS30/1000	682	**1 120**	1 180	1 320	479	100	122	Tr1180X8	G1/4	12	15
H240/1180-HG	HM30/1180	MS30/1000	782	**1 120**	1 180	1 320	625	100	122	Tr1180X8	G1/4	12	15
H31/1180-HG	HM31/1180	MS31/1000	1 160	**1 120**	1 180	1 420	647	125	150	Tr1180X8	G1/4	12	15
H241/1180-HG	HM31/1180	MS31/1000	1 290	**1 120**	1 180	1 420	845	125	150	Tr1180X8	G1/4	13	15
H39/1250-HG	HM30/1250	MS30/1000	708	**1 180**	1 250	1 390	407	110	132	Tr1250X8	G1/4	14	15
H30/1250-HG	HM30/1250	MS30/1000	858	**1 180**	1 250	1 390	509	110	132	Tr1250X8	G1/4	15	15
H240/1250-HG	HM30/1250	MS30/1000	988	**1 180**	1 250	1 390	660	110	132	Tr1250X8	G1/4	14	15
H31/1250-HG	HM31/1250	MS31/1000	1 380	**1 180**	1 250	1 490	677	125	150	Tr1250X8	G1/4	14	15
H241/1250-HG	HM31/1250	MS31/1000	1 540	**1 180**	1 250	1 490	885	125	150	Tr1250X8	G1/4	14	15
H39/1320-HG	HM30/1320	MS30/1000	781	**1 250**	1 320	1 460	430	110	132	Tr1320X8	G1/4	14	15
H30/1320-HG	HM30/1320	MS30/1000	946	**1 250**	1 320	1 460	534	110	132	Tr1320X8	G1/4	15	15
H240/1320-HG	HM30/1320	MS30/1000	1 080	**1 250**	1 320	1 460	690	110	132	Tr1320X8	G1/4	14	15
H31/1320-HG	HM31/1320	MS31/1000	1 510	**1 250**	1 320	1 560	710	125	150	Tr1320X8	G1/4	14	15
H241/1320-HG	HM31/1320	MS31/1000	1 700	**1 250**	1 320	1 560	935	125	150	Tr1320X8	G1/4	14	15
H39/1400-HG	HM30/1400	MS30/1000	924	**1 320**	1 400	1 540	445	110	132	Tr1400X8	G1/4	15	15
H30/1400-HG	HM30/1400	MS30/1000	1 110	**1 320**	1 400	1 540	546	110	132	Tr1400X8	G1/4	15	15
H240/1400-HG	HM30/1400	MS30/1000	1 290	**1 320**	1 400	1 540	705	110	132	Tr1400X8	G1/4	14	15
H31/1400-HG	HM31/1400	MS31/1000	1 790	**1 320**	1 400	1 640	735	130	155	Tr1400X8	G1/4	15	15
H241/1400-HG	HM31/1400	MS31/1000	2 030	**1 320**	1 400	1 640	965	130	155	Tr1400X8	G1/4	15	15

Dimension table (continued) · Dimensions in mm

Designation			Mass	Dimensions							Mounting dimensions		
Adapter sleeve Complete	Nut	Retainer	m ≈kg	d_{1H}	d	D_m ≈	l	c ≈	c_1 ≈	d_{2G}	R_0	e	t
H39/1500-HG	HM30/1500	MS30/1500	1 210	**1 400**	1 500	1 650	465	110	132	Tr1500X8	G1/4	15	15
H30/1500-HG	HM30/1500	MS30/1500	1 530	**1 400**	1 500	1 650	600	110	132	Tr1500X8	G1/4	15	15
H240/1500-HG	HM30/1500	MS30/1500	1 790	**1 400**	1 500	1 650	775	110	132	Tr1500X8	G1/4	14	15
H31/1500-HG	HM31/1500	MS31/1000	2 230	**1 400**	1 500	1 740	755	130	155	Tr1500X8	G1/4	15	15
H241/1500-HG	HM31/1500	MS31/1000	2 560	**1 400**	1 500	1 740	990	130	155	Tr1500X8	G1/4	15	15
H39/1600-HG	Z-195077.01.HM	MS30/850	2 480	**1 500**	1 600	1 730	465	100	122	Tr1600X8	G1/4	15	15
H39/1700-HG	Z-195078.01.HM	MS30/850	2 620	**1 600**	1 700	1 830	475	100	122	Tr1600X8	G1/4	15	15



Withdrawal sleeves

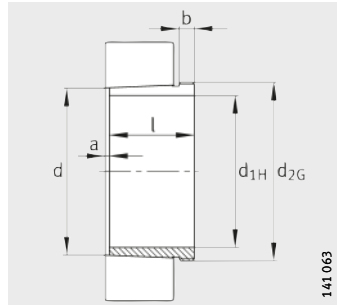

Taper 1:12

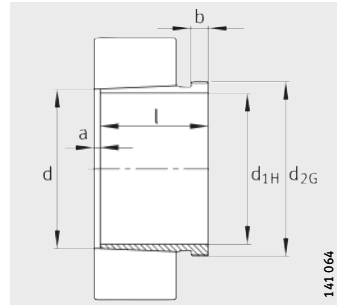

AH240, AH241
Taper 1:30

Dimension table · Dimensions in mm

Designation	Mass	Dimensions						Mounting dimensions		
	m ≈kg	d_{1H}	d	l	a ≈	b	d_{2G}	R_0	e	t
AHX2330	2,88	**145**	150	135	5	24	M165X3	–	–	–
AHX2330G	2,64	**145**	150	135	5	24	M160X3	–	–	–
AH3330	3,36	**145**	150	152	5	24	M165X3	–	–	–
AH2332	4,77	**150**	160	140	6	24	M180X3	–	–	–
AH2332G	4,26	**150**	160	140	6	24	M170X3	–	–	–
AH2332G-H	4,26	**150**	160	140	6	24	M170X3	M6	4,5	7
AH2332-H	4,77	**150**	160	140	6	24	M180X3	M6	4,5	7
AH3332	5,58	**150**	160	160	6	24	M180X3	–	–	–
AH3332-H	5,58	**150**	160	160	6	24	M180X3	M6	4,5	7
AH2334	5,32	**160**	170	146	6	24	M190X3	–	–	–
AH2334G	4,78	**160**	170	146	6	24	M180X3	–	–	–
AH2334G-H	4,78	**160**	170	146	6	24	M180X3	M6	4,5	7
AH2334-H	5,32	**160**	170	146	6	24	M190X3	M6	4,5	7
AH3334	6,11	**160**	170	164	6	24	M190X3	–	–	–
AH3334-H	6,11	**160**	170	164	6	24	M190X3	M6	4,5	7
AH2236	3,76	**170**	180	105	5	17	M200X3	–	–	–
AH2236G	3,35	**170**	180	105	5	17	M190X3	–	–	–
AH2236G-H	3,28	**170**	180	105	5	17	M190X3	M6	4,5	7
AH2236-H	3,68	**170**	180	105	5	17	M200X3	M6	4,5	7
AH3236	5,39	**170**	180	140	6	25	M200X3	–	–	–
AH3236G	4,8	**170**	180	140	6	25	M190X3	–	–	–
AH3236G-H	4,8	**170**	180	140	6	25	M190X3	M6	4,5	7
AH3236-H	5,39	**170**	180	140	6	25	M200X3	M6	4,5	7
AH2336	6,04	**170**	180	154	6	26	M200X3	–	–	–
AH2336G	5,42	**170**	180	154	6	26	M190X3	–	–	–
AH2336G-H	5,42	**170**	180	154	6	26	M190X3	M6	4,5	7
AH2336-H	6,04	**170**	180	154	6	26	M200X3	M6	4,5	7
AH3336	7,1	**170**	180	176	6	26	M200X3	–	–	–
AH3336-H	7,1	**170**	180	176	6	26	M200X3	M6	4,5	7

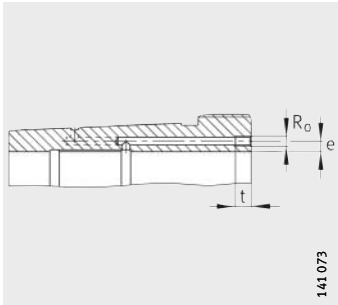

Hydraulic withdrawal sleeve
(suffix H)
Mounting dimensions

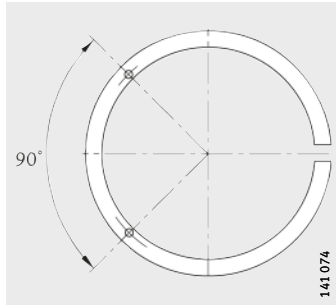

Pump connectors
for hydraulic withdrawal sleeve

Dimension table (continued) · Dimensions in mm

Designation	Mass	Dimensions						Mounting dimensions		
	m ≈kg	d_{1H}	d	l	a ≈	b	d_{2G}	R_0	e	t
AH2238	4,28	**180**	190	112	5	18	Tr210X4	–	–	–
AH2238G	3,83	**180**	190	112	5	18	M200X3	–	–	–
AH2238G-H	3,75	**180**	190	112	5	18	M200X3	M6	4,5	7
AH2238-H	4,19	**180**	190	112	5	18	Tr210X4	M6	4,5	7
AH3138	4,89	**180**	190	125	6	20	Tr210X4	–	–	–
AH3138G	4,39	**180**	190	125	6	20	M200X3	–	–	–
AH3138G-H	4,39	**180**	190	125	6	20	M200X3	M6	4,5	7
AH3138-H	4,89	**180**	190	125	6	20	Tr210X4	M6	4,5	7
AH3238	5,92	**180**	190	145	7	25	Tr210X4	–	–	–
AH3238G	5,3	**180**	190	145	7	25	M200X3	–	–	–
AH3238G-H	5,3	**180**	190	145	7	25	M200X3	M6	4,5	7
AH3238-H	5,92	**180**	190	145	7	25	Tr210X4	M6	4,5	7
AH24138	4,37	**180**	190	146	13	18	M200X3	–	–	–
AH2338	6,67	**180**	190	160	7	26	Tr210X4	–	–	–
AH2338G	6,02	**180**	190	160	7	26	M200X3	–	–	–
AH2338G-H	6,02	**180**	190	160	7	26	M200X3	M6	4,5	7
AH2338-H	6,67	**180**	190	160	7	26	Tr210X4	M6	4,5	7
AH3338	7,76	**180**	190	181	7	26	Tr210X4	–	–	–
AH3338-H	7,76	**180**	190	181	7	26	Tr210X4	M6	4,5	7
AH2240	4,8	**190**	200	118	5	19	Tr220X4	–	–	–
AH2240-H	4,7	**190**	200	118	5	19	Tr220X4	M6	4,5	7
AH3140	5,6	**190**	200	134	6	21	Tr220X4	–	–	–
AH3140-H	5,6	**190**	200	134	6	21	Tr220X4	M6	4,5	7
AH3240	6,61	**190**	200	153	7	24	Tr220X4	–	–	–
AH3240-H	6,61	**190**	200	153	7	24	Tr220X4	M6	4,5	7
AH24140	5,02	**190**	200	158	13	18	Tr220X4	–	–	–
AH2340	7,64	**190**	200	170	7	30	Tr220X4	–	–	–
AH2340-H	7,64	**190**	200	170	7	30	Tr220X4	M6	4,5	7
AH3340	9,04	**190**	200	195	7	30	Tr220X4	–	–	–
AH3340-H	9,04	**190**	200	195	7	30	Tr220X4	M6	4,5	7

Withdrawal sleeves

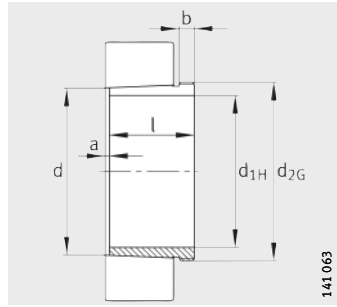

Taper 1:12

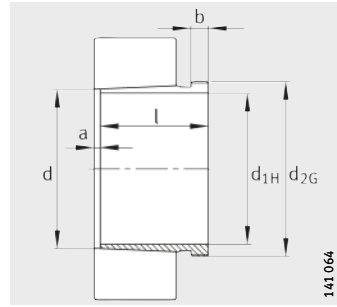

AH240, AH241
Taper 1:30

Dimension table (continued) · Dimensions in mm

Designation	Mass	Dimensions						Mounting dimensions		
	m	d_{1H}	d	l	a	b	d_{2G}	R_0	e	t
	≈kg				≈					
AH3044	7,47	**200**	220	111	6	20	Tr235X4	–	–	–
AH3044G	7,18	**200**	220	111	6	20	Tr230X4	–	–	–
AH3044G-H	7,18	**200**	220	111	6	20	Tr230X4	G1/8	6,5	12
AH3044-H	7,47	**200**	220	111	6	20	Tr235X4	G1/8	8,5	12
AH2244	9,17	**200**	220	130	6	20	Tr240X4	–	–	–
AH2244-H	8,99	**200**	220	130	6	20	Tr240X4	G1/8	8,5	12
AH24044	8,22	**200**	220	138	14	18	Tr230X4	–	–	–
AH24044-H	8,22	**200**	220	138	14	18	Tr230X4	M6	8	7
AH3144	10,4	**200**	220	145	6	23	Tr240X4	G1/8	8,5	12
AH3144-H	10,4	**200**	220	145	6	23	Tr240X4	G1/8	8,5	12
AH24144	10,3	**200**	220	170	14	20	Tr230X4	–	–	–
AH24144-H	10,3	**200**	220	170	14	20	Tr230X4	M6	8	7
AH2344	13,6	**200**	220	181	8	30	Tr240X4	–	–	–
AH2344-H	13,6	**200**	220	181	8	30	Tr240X4	G1/8	8,5	12
AH3344	16,2	**200**	220	210	8	30	Tr240X4	–	–	–
AH3344-H	16,2	**200**	220	210	8	30	Tr240X4	G1/8	8,5	12
AH3948	5,26	**220**	240	77	6	16	Tr250X4	–	–	–
AH3948-H	5,26	**220**	240	77	6	16	Tr250X4	M6	7,5	12
AH3048	8,92	**220**	240	116	7	21	Tr260X4	–	–	–
AH3048-H	8,92	**220**	240	116	7	21	Tr260X4	G1/8	8,5	12
AH24048	9,03	**220**	240	138	15	20	Tr250X4	–	–	–
AH24048-H	9,03	**220**	240	138	15	20	Tr250X4	M6	8	7
AH2248	11,3	**220**	240	144	6	21	Tr260X4	–	–	–
AH2248-H	11	**220**	240	144	6	21	Tr260X4	G1/8	8,5	12
AH3148	12,3	**220**	240	154	7	25	Tr260X4	–	–	–
AH3148-H	12,3	**220**	240	154	7	25	Tr260X4	G1/8	8,5	12
AH24148	12,6	**220**	240	180	15	20	Tr260X4	–	–	–
AH24148-H	12,6	**220**	240	180	15	20	Tr260X4	G1/8	8,5	12
AH2348	15,6	**220**	240	189	8	30	Tr260X4	–	–	–
AH2348-H	15,6	**220**	240	189	8	30	Tr260X4	G1/8	8,5	12
AH3348	19,3	**220**	240	225	8	30	Tr260X4	–	–	–
AH3348-H	19,3	**220**	240	225	8	30	Tr260X4	G1/8	8,5	12

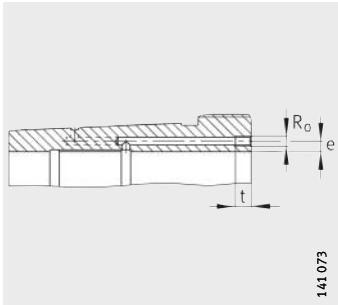

Hydraulic withdrawal sleeve
(suffix H)
Mounting dimensions

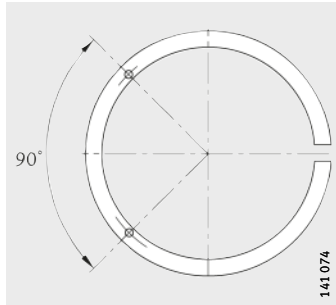

Pump connectors
for hydraulic withdrawal sleeve

Dimension table (continued) · Dimensions in mm

Designation	Mass	Dimensions						Mounting dimensions		
	m ≈kg	d_{1H}	d	l	a ≈	b	d_{2G}	R_0	e	t
AH3952	7,39	**240**	260	94	6	18	Tr275X4	–	–	–
AH3952G	7,7	**240**	260	94	6	18	Tr280X4	–	–	–
AH3952G-H	7,7	**240**	260	94	6	18	Tr280X4	M8	7,5	12
AH3952-H	7,39	**240**	260	94	6	18	Tr275X4	M8	7,5	12
AH3052	10,8	**240**	260	128	7	23	Tr280X4	–	–	–
AH3052-H	10,8	**240**	260	128	7	23	Tr280X4	G1/8	8,5	12
AH2252	14,1	**240**	260	155	6	23	Tr290X4	–	–	–
AH2252G	13,3	**240**	260	155	6	23	Tr280X4	–	–	–
AH2252G-H	13,1	**240**	260	155	6	23	Tr280X4	G1/8	8,5	12
AH2252-H	13,8	**240**	260	155	6	23	Tr290X4	G1/8	8,5	12
AH24052	11,6	**240**	260	162	16	20	Tr270X4	–	–	–
AH24052G	12,3	**240**	260	162	16	20	Tr280X4	–	–	–
AH24052G-H	12,3	**240**	260	162	16	20	Tr280X4	M6	8	7
AH24052-H	11,6	**240**	260	162	16	20	Tr270X4	M6	8	7
AH3152	16	**240**	260	172	7	26	Tr290X4	–	–	–
AH3152G	15,1	**240**	260	172	7	26	Tr280X4	–	–	–
AH3152G-H	15,1	**240**	260	172	7	26	Tr280X4	G1/8	7	12
AH3152-H	16	**240**	260	172	7	26	Tr290X4	G1/8	7	12
AH24152	15,5	**240**	260	202	16	22	Tr280X4	–	–	–
AH24152-H	15,5	**240**	260	202	16	22	Tr280X4	G1/8	8,5	12
AH2352	19,7	**240**	260	205	8	30	Tr290X4	–	–	–
AH2352G	18,7	**240**	260	205	8	30	Tr280X4	–	–	–
AH2352G-H	18,7	**240**	260	205	8	30	Tr280X4	G1/8	8,5	12
AH2352-H	19,7	**240**	260	205	8	30	Tr280X4	G1/8	8,5	12
AH3352	23,2	**240**	260	236	8	30	Tr290X4	–	–	–
AH3352-H	23,2	**240**	260	236	8	30	Tr290X4	G1/8	8,5	12

Withdrawal sleeves

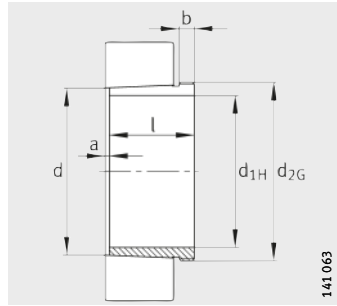

Taper 1:12

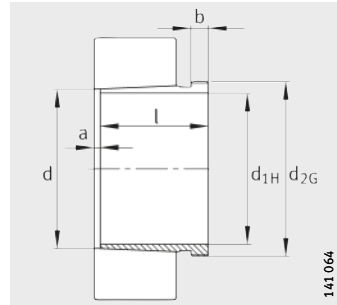

AH240, AH241
Taper 1:30

Dimension table (continued) · Dimensions in mm

Designation	Mass	Dimensions						Mounting dimensions		
	m ≈kg	d_{1H}	d	l	a ≈	b	d_{2G}	R_0	e	t
AH3956	7,98	**260**	280	94	6	18	Tr295X4	–	–	–
AH3956G	8,3	**260**	280	94	6	18	Tr300X4	–	–	–
AH3956G-H	8,3	**260**	280	94	6	18	Tr300X4	M8	7,5	12
AH3956-H	7,98	**260**	280	94	6	18	Tr295X4	M8	7,5	12
AH3056	12	**260**	280	131	8	24	Tr300X4	–	–	–
AH3056-H	12	**260**	280	131	8	24	Tr300X4	G1/8	8,5	12
AH2256	15,3	**260**	280	155	8	24	Tr310X4	–	–	–
AH2256G	14,4	**260**	280	155	8	24	Tr300X4	–	–	–
AH2256G-H	14,1	**260**	280	155	8	24	Tr300X4	G1/8	8,5	12
AH2256-H	15	**260**	280	155	8	24	Tr310X4	G1/8	8,5	12
AH24056	12,6	**260**	280	162	17	22	Tr290X4	–	–	–
AH24056G	13,4	**260**	280	162	17	22	Tr300X4	–	–	–
AH24056G-H	13,4	**260**	280	162	17	22	Tr300X4	M6	8	7
AH24056-H	12,6	**260**	280	162	17	22	Tr290X4	M6	8	7
AH3156	17,7	**260**	280	175	8	28	Tr310X4	–	–	–
AH3156G	16,7	**260**	280	175	8	28	Tr300X4	–	–	–
AH3156G-H	16,7	**260**	280	175	8	28	Tr300X4	G1/8	8,5	12
AH3156-H	17,7	**260**	280	175	8	28	Tr310X4	G1/8		12
AH24156	16,7	**260**	280	202	17	22	Tr300X4	–	–	–
AH24156-H	16,7	**260**	280	202	17	22	Tr300X4	G1/8	8,5	12
AH2356	22,1	**260**	280	212	8	30	Tr310X4	–	–	–
AH2356G	20,9	**260**	280	212	8	30	Tr300X4	–	–	–
AH2356G-H	20,9	**260**	280	212	8	30	Tr300X4	G1/8	8,5	12
AH2356-H	22,1	**260**	280	212	8	30	Tr310X4	G1/8	8,5	12
AH3356	27,4	**260**	280	254	8	30	Tr310X4	–	–	–
AH3356-H	27,4	**260**	280	254	8	30	Tr310X4	G1/8	8,5	12

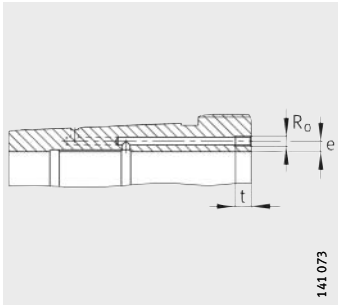

Hydraulic withdrawal sleeve
(suffix H)
Mounting dimensions

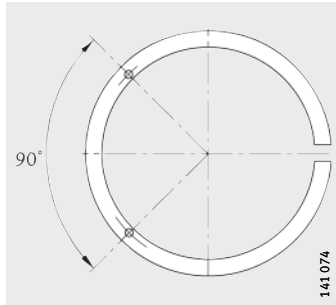

Pump connectors
for hydraulic withdrawal sleeve

Dimension table (continued) · Dimensions in mm

Designation	Mass	Dimensions						Mounting dimensions		
	m ≈kg	d_{1H}	d	l	a ≈	b	d_{2G}	R_0	e	t
AH3960	10,4	**280**	300	112	7	21	Tr315X5	–	–	–
AH3960G	10,8	**280**	300	112	7	21	Tr320X5	–	–	–
AH3960G-H	10,8	**280**	300	112	7	21	Tr320X5	M8	7,5	12
AH3960-H	10,4	**280**	300	112	7	21	Tr315X5	M8	7,5	12
AH3060	14,4	**280**	300	145	8	26	Tr320X5	–	–	–
AH3060-H	14,4	**280**	300	145	8	26	Tr320X5	G1/8	8,5	12
AH2260	18,3	**280**	300	170	8	26	Tr330X5	–	–	–
AH2260G	17,2	**280**	300	170	8	26	Tr320X5	–	–	–
AH2260G-H	16,9	**280**	300	170	8	26	Tr320X5	G1/8	8,5	12
AH2260-H	17,9	**280**	300	170	8	26	Tr330X5	G1/8	8,5	12
AH24060	15,5	**280**	300	184	18	24	Tr310X4	–	–	–
AH24060G	16,4	**280**	300	184	18	24	Tr320X5	–	–	–
AH24060G-H	16,4	**280**	300	184	18	24	Tr320X5	M6	8	7
AH24060-H	15,5	**280**	300	184	18	24	Tr310X4	M6	8	7
AH3160	21,2	**280**	300	192	8	30	Tr330X5	–	–	–
AH3160G	20	**280**	300	192	8	30	Tr320X5	–	–	–
AH3160G-H	20	**280**	300	192	8	30	Tr320X5	G1/8	8,5	12
AH3160-H	21,2	**280**	300	192	8	30	Tr330X5	G1/8	8,5	12
AH24160	20,1	**280**	300	224	18	24	Tr320X5	–	–	–
AH24160-H	20,1	**280**	300	224	18	24	Tr320X5	G1/8	8,5	12
AH3260	26	**280**	300	228	8	34	Tr330X5	–	–	–
AH3260G	24,6	**280**	300	228	8	34	Tr320X5	–	–	–
AH3260G-H	24,6	**280**	300	228	8	34	Tr320X5	G1/8	8,5	12
AH3260-H	26	**280**	300	228	8	34	Tr330X5	G1/8	8,5	12
AH3360	31,8	**280**	300	270	8	34	Tr330X5	–	–	–
AH3360-H	31,8	**280**	300	270	8	34	Tr330X5	G1/8	8,5	12

Withdrawal sleeves

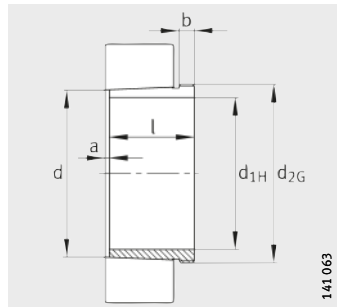

Taper 1:12

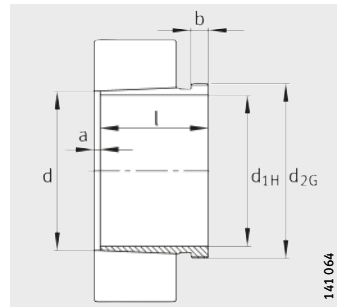

AH240, AH241
Taper 1:30

Dimension table (continued) · Dimensions in mm

Designation	Mass	Dimensions						Mounting dimensions		
	m ≈kg	d_{1H}	d	l	a ≈	b	d_{2G}	R_0	e	t
AH3964G-H	11,5	**300**	320	112	7	21	Tr340X5	M8	7,5	12
AH3964-H	11,1	**300**	320	112	7	21	Tr335X5	M8	7,5	12
AH3064G-H	15,9	**300**	320	149	8	27	Tr340X5	G1/8	8,5	12
AH3064-H	16,5	**300**	320	149	8	27	Tr345X5	G1/8	8,5	12
AH2264G	19,8	**300**	320	180	10	27	Tr340X5	–	–	–
AH2264G-H	19,6	**300**	320	180	10	27	Tr340X5	G1/8	8,5	12
AH2264-H	20,6	**300**	320	180	10	27	Tr350X5	G1/8	8,5	12
AH24064G-H	17,5	**300**	320	184	18	24	Tr340X5	M6	8	7
AH24064-H	16,6	**300**	320	184	18	24	Tr330X5	M6	8	7
AH3164G-H	23,6	**300**	320	209	8	31	Tr340X5	G1/8	8,5	12
AH3164-H	24,9	**300**	320	209	8	31	Tr350X5	G1/8	8,5	12
AH24164-H	23,4	**300**	320	242	18	24	Tr340X5	G1/8	8,5	12
AH3264G-H	28,9	**300**	320	246	8	36	Tr340X5	G1/8	8,5	12
AH3264-H	30,4	**300**	320	246	8	36	Tr350X5	G1/8	8,5	12
AH3364-H	37,9	**300**	320	294	8	36	Tr350X5	G1/8	8,5	12
AH3968G-H	12,3	**320**	340	112	7	21	Tr360X5	M8	7,5	12
AH3968-H	11,8	**320**	340	112	7	21	Tr355X5	M8	7,5	12
AH3068G-H	18,6	**320**	340	162	9	28	Tr360X5	G1/8	8,5	12
AH3068-H	19,2	**320**	340	162	9	28	Tr365X5	G1/8	8,5	12
AH24068-H	21,1	**320**	340	206	19	26	Tr360X5	G1/8	8,5	12
AH3168G-H	27,5	**320**	340	225	9	33	Tr360X5	G1/8	8,5	12
AH3168-H	28,9	**320**	340	225	9	33	Tr370X5	G1/8	8,5	12
AH3268G-H	33,6	**320**	340	264	9	38	Tr360X5	G1/8	8,5	12
AH3268-H	35,3	**320**	340	264	9	38	Tr370X5	G1/8	8,5	12
AH24168-H	28	**320**	340	269	19	26	Tr360X5	G1/8	8,5	12
AH3368-H	43,1	**320**	340	310	9	38	Tr370X5	G1/8	8,5	12
AH3972G-H	13	**340**	360	112	7	21	Tr380X5	M8	7,5	12
AH3972-H	12,5	**340**	360	112	7	21	Tr375X5	M8	7,5	12
AH3072G-H	20,5	**340**	360	167	9	30	Tr380X5	G1/8	8,5	12
AH3072-H	21,2	**340**	360	167	9	30	Tr385X5	G1/8	8,5	12
AH24072-H	22,3	**340**	360	206	20	26	Tr380X5	G1/8	8,5	12
AH3172G-H	29,8	**340**	360	229	9	35	Tr380X5	G1/8	8,5	12
AH3172-H	33,1	**340**	360	229	9	35	Tr400X5	G1/8	8,5	12
AH24172-H	29,7	**340**	360	229	9	35	Tr380X5	G1/8	8,5	12
AH3272G-H	37,3	**340**	360	274	9	40	Tr380X5	G1/8	8,5	12
AH3272-H	41,1	**340**	360	274	9	40	Tr400X5	G1/8	8,5	12
AH3372-H	51,5	**340**	360	330	9	40	Tr400X5	G1/8	8,5	12

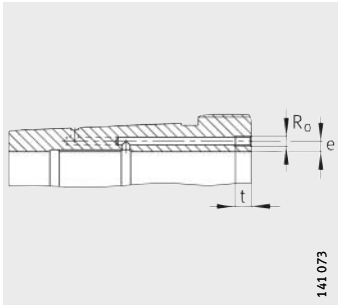

Hydraulic withdrawal sleeve
(suffix H)
Mounting dimensions

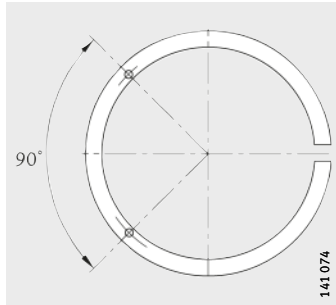

Pump connectors
for hydraulic withdrawal sleeve

Dimension table (continued) · Dimensions in mm

Designation	Mass	Dimensions						Mounting dimensions		
	m ≈kg	d_{1H}	d	l	a ≈	b	d_{2G}	R_0	e	t
AH3976G-H	16,1	**360**	380	130	8	22	Tr400X5	M8	7,5	12
AH3976-H	15,6	**360**	380	130	8	22	Tr395X5	M8	7,5	12
AH3076G-H	22,1	**360**	380	170	10	31	Tr400X5	G1/8	8,5	12
AH3076-H	23,6	**360**	380	170	10	31	Tr410X5	G1/8	8,5	12
AH24076-H	24	**360**	380	208	20	28	Tr400X5	G1/8	8,5	12
AH3176G-H	32	**360**	380	232	10	36	Tr400X5	G1/8	8,5	12
AH3176-H	35,6	**360**	380	232	10	36	Tr420X5	G1/8	8,5	12
AH24176-H	31,8	**360**	380	271	20	28	Tr400X5	G1/8	8,5	12
AH3276G-H	41,3	**360**	380	284	10	42	Tr400X5	G1/8	8,5	12
AH3276-H	45,5	**360**	380	284	10	42	Tr420X5	G1/8	8,5	12
AH3376-H	57,1	**360**	380	342	10	42	Tr420X5	G1/8	8,5	12
AH3980G-H	17	**380**	400	130	8	22	Tr420X5	M8	7,5	12
AH3980-H	16,4	**380**	400	130	8	22	Tr415X5	M8	7,5	12
AH3080G-H	25,4	**380**	400	183	10	33	Tr420X5	G1/8	8,5	12
AH3080-H	27,1	**380**	400	183	10	33	Tr430X5	G1/8	8,5	12
AH24080-H	27,8	**380**	400	228	20	28	Tr420X5	G1/8	8,5	12
AH3180G-H	35,1	**380**	400	240	10	38	Tr420X5	G1/8	8,5	12
AH3180-H	39,1	**380**	400	240	10	38	Tr440X5	G1/8	8,5	12
AH24180-H	34,4	**380**	400	278	20	28	Tr420X5	G1/8	8,5	12
AH3280G-H	47,1	**380**	400	302	10	44	Tr420X5	G1/8	8,5	12
AH3280-H	51,7	**380**	400	302	10	44	Tr440X5	G1/8	8,5	12
AH3380-H	62,5	**380**	400	352	10	44	Tr440X5	G1/8	8,5	12
AH3984G-H	17,8	**400**	420	130	8	22	Tr440X5	M8	7,5	12
AH3984-H	17,3	**400**	420	130	8	22	Tr435X5	M8	7,5	12
AH3084G-H	27,2	**400**	420	186	10	34	Tr440X5	G1/8	8,5	12
AH3084-H	29,1	**400**	420	186	10	34	Tr450X5	G1/8	8,5	12
AH24084-H	29,6	**400**	420	230	22	30	Tr440X5	G1/8	8,5	12
AH3184G-H	42	**400**	420	266	10	40	Tr440X5	G1/8	8,5	12
AH3184-H	46,4	**400**	420	266	10	40	Tr460X5	G1/8	8,5	12
AH24184-H	41	**400**	420	310	22	30	Tr440X5	G1/8	8,5	12
AH3284G-H	53,6	**400**	420	321	10	46	Tr440X5	G1/8	8,5	12
AH3284-H	58,6	**400**	420	321	10	46	Tr460X5	G1/8	8,5	12
AH3384-H	67,9	**400**	420	361	10	46	Tr460X5	G1/8	8,5	12

Withdrawal sleeves

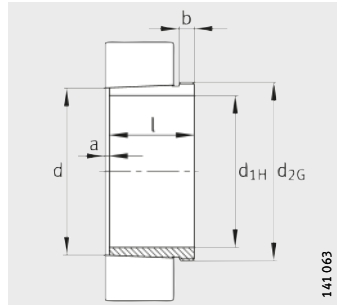

Taper 1:12

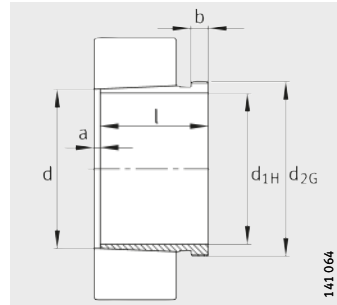

AH240, AH241
Taper 1:30

Dimension table (continued) · Dimensions in mm

Designation	Mass	Dimensions						Mounting dimensions		
	m ≈kg	d_{1H}	d	l	a ≈	b	d_{2G}	R_0	e	t
AH3988-H	21,2	**420**	440	145	8	25	Tr460X5	G1/8	8,5	12
AHX3088G-H	30	**420**	440	194	11	35	Tr460X5	G1/8	8,5	12
AHX3088-H	31,9	**420**	440	194	11	35	Tr470X5	G1/8	8,5	12
AH24088-H	32,8	**420**	440	242	22	30	Tr460X5	G1/8	8,5	12
AHX3188G-H	44,9	**420**	440	270	11	42	Tr460X5	G1/8	8,5	12
AHX3188-H	49,7	**420**	440	270	11	42	Tr480X5	G1/8	8,5	12
AH24188-H	42,9	**420**	440	310	22	30	Tr460X5	G1/8	8,5	12
AHX3288G-H	58,2	**420**	440	330	11	48	Tr460X5	G1/8	8,5	12
AHX3288-H	63,7	**420**	440	330	11	48	Tr480X5	G1/8	8,5	12
AH3388-H	79,6	**420**	440	393	11	48	Tr480X5	G1/8	8,5	12
AH3992-H	22,2	**440**	460	145	8	25	Tr480X5	G1/8	8,5	12
AHX3092G-H	32,9	**440**	460	202	11	37	Tr480X5	G1/8	8,5	12
AHX3092-H	35,1	**440**	460	202	11	37	Tr490X5	G1/8	8,5	12
AH24092-H	35,6	**440**	460	250	23	32	Tr480X5	G1/8	8,5	12
AHX3192G-H	50,3	**440**	460	285	11	43	Tr480X5	G1/8	8,5	12
AHX3192-H	58	**440**	460	285	11	43	Tr510X6	G1/8	8,5	12
AH24192-H	48,7	**440**	460	332	23	32	Tr480X5	G1/8	8,5	12
AHX3292G-H	65,6	**440**	460	349	11	50	Tr480X5	G1/8	8,5	12
AHX3292-H	74,6	**440**	460	349	11	50	Tr510X6	G1/8	8,5	12
AH3392-H	92,6	**440**	460	415	11	50	Tr510X6	G1/8	8,5	12
AH3996-H	25,7	**460**	480	158	9	28	Tr500X5	G1/8	8,5	12
AHX3096G-H	35	**460**	480	205	12	38	Tr500X5	G1/8	8,5	12
AHX3096-H	39,7	**460**	480	205	12	38	Tr520X6	G1/8	8,5	12
AH24096-H	37,2	**460**	480	250	23	32	Tr500X5	G1/8	8,5	12
AHX3196G-H	54,8	**460**	480	295	12	45	Tr500X5	G1/8	8,5	12
AHX3196-H	63,3	**460**	480	295	12	45	Tr530X6	G1/8	8,5	12
AH24196G-H	52,2	**460**	480	340	23	32	Tr500X5	G1/8	8,5	12
AH24196-H	52,9	**460**	480	343	25	35	Tr500X5	G1/8	8,5	12
AHX3296G-H	72,4	**460**	480	364	12	52	Tr500X5	G1/8	8,5	12
AHX3296-H	82,2	**460**	480	364	12	52	Tr530X6	G1/8	8,5	12
AH3396-H	100	**460**	480	427	12	52	Tr530X6	G1/8	8,5	12

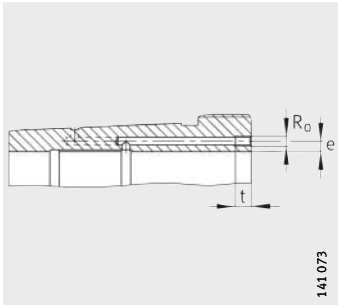

Hydraulic withdrawal sleeve
(suffix H)
Mounting dimensions

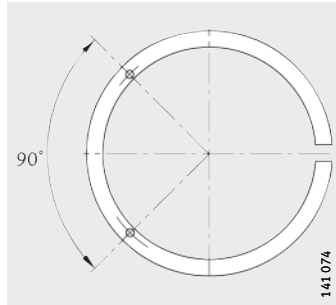

Pump connectors
for hydraulic withdrawal sleeve

Dimension table (continued) · Dimensions in mm

Designation	Mass	Dimensions						Mounting dimensions		
	m ≈kg	d_{1H}	d	l	a ≈	b	d_{2G}	R_0	e	t
AH39/500G-H	29,8	**480**	500	162	10	32	Tr530X6	G1/8	8,5	12
AH39/500-H	27,7	**480**	500	162	10	32	Tr520X6	G1/8	8,5	12
AHX30/500G-H	39,9	**480**	500	209	12	40	Tr530X6	G1/8	8,5	12
AHX30/500-H	42,5	**480**	500	209	12	40	Tr540X6	G1/8	8,5	12
AH240/500G-H	41,7	**480**	500	253	23	35	Tr530X6	G1/8	8,5	12
AH240/500-H	39,5	**480**	500	253	23	35	Tr520X6	G1/8	8,5	12
AHX31/500G-H	64,7	**480**	500	313	12	47	Tr530X6	G1/8	8,5	12
AHX31/500-H	70,9	**480**	500	313	12	47	Tr550X6	G1/8	8,5	12
AH241/500G-H	60,5	**480**	500	360	23	35	Tr530X6	G1/8	8,5	12
AH241/500-H	58,8	**480**	500	362	25	37	Tr520X6	G1/8	8,5	12
AHX32/500G-H	87,3	**480**	500	393	12	54	Tr530X6	G1/8	8,5	12
AHX32/500-H	94,4	**480**	500	393	12	54	Tr550X6	G1/8	8,5	12
AH33/500-H	110	**480**	500	442	12	54	Tr550X6	G1/8	8,5	12
AH39/530G-H	45,6	**500**	530	175	10	37	Tr560X6	G1/4	10	15
AH39/530-H	43,1	**500**	530	175	10	37	Tr550X6	G1/4	10	15
AH30/530A-H	61,7	**500**	530	230	12	45	Tr560X6	G1/4	10	15
AH240/530G-H	67,5	**500**	530	285	24	35	Tr560X6	G1/4	8,5	15
AH240/530-H	66,8	**500**	530	290	25	40	Tr550X6	G1/4	8,5	15
AH31/530A-H	92,3	**500**	530	325	12	53	Tr560X6	G1/4	10	15
AH241/530G-H	89	**500**	530	370	24	35	Tr560X6	G1/4	10	15
AH241/530-H	88,2	**500**	530	375	25	40	Tr550X6	G1/4	10	15
AH32/530AG-H	124	**500**	530	412	12	57	Tr560X6	G1/4	10	15
AH32/530A-H	132	**500**	530	412	12	57	Tr580X6	G1/4	10	15
AH33/530-H	155	**500**	530	469	12	57	Tr580X6	G1/4	10	15
AH39/560G-H	52,3	**530**	560	180	10	37	Tr600X6	G1/4	12	15
AH39/560-H	47	**530**	560	180	10	37	Tr580X6	G1/4	12	15
AH30/560AG-H	71,6	**530**	560	240	12	45	Tr600X6	G1/4	12	15
AH30/560A-H	68,4	**530**	560	240	12	45	Tr590X6	G1/4	12	15
AH240/560G-H	77,5	**530**	560	296	24	38	Tr600X6	G1/4	8,5	15
AH240/560-H	72,7	**530**	560	298	25	40	Tr580X6	G1/4	8,5	15
AH31/560AG-H	105	**530**	560	335	12	55	Tr600X6	G1/4	12	15
AH31/560A-H	101	**530**	560	335	12	55	Tr590X6	G1/4	12	15
AH241/560G-H	104	**530**	560	393	24	38	Tr600X6	G1/4	12	15
AH241/560-H	101	**530**	560	400	28	45	Tr580X6	G1/4	12	15
AH32/560AG-H	139	**530**	560	422	12	57	Tr600X6	G1/4	12	15
AH32/560A-H	144	**530**	560	422	12	57	Tr610X6	G1/4	12	15
AH33/560-H	166	**530**	560	475	12	57	Tr610X6	G1/4	12	15

Withdrawal sleeves

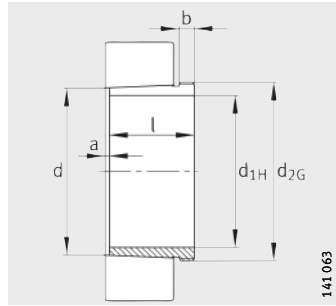

Taper 1:12

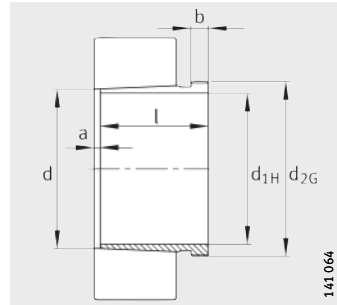

AH240, AH241
Taper 1:30

Dimension table (continued) · Dimensions in mm

Designation	Mass	Dimensions						Mounting dimensions		
	m ≈kg	d_{1H}	d	l	a ≈	b	d_{2G}	R_0	e	t
AH39/600G-H	57	**570**	600	192	10	38	Tr630X6	G1/4	12	15
AH39/600-H	55,6	**570**	600	192	10	38	Tr625X6	G1/4	12	15
AH30/600A-H	75	**570**	600	245	14	45	Tr630X6	G1/4	12	15
AH240/600G-H	84,1	**570**	600	310	26	38	Tr630X6	G1/4	8,5	15
AH240/600-H	85,4	**570**	600	317	30	45	Tr625X6	G1/4	8,5	15
AH31/600A-H	116	**570**	600	355	14	55	Tr630X6	G1/4	12	15
AH241/600G-H	114	**570**	600	413	26	38	Tr630X6	G1/4	12	15
AH241/600-H	118	**570**	600	425	30	50	Tr625X6	G1/4	12	15
AH32/600AG-H	155	**570**	600	445	14	57	Tr630X6	G1/4	12	15
AH32/600A-H	164	**570**	600	445	14	57	Tr650X6	G1/4	12	15
AH33/600-H	200	**570**	600	519	14	57	Tr650X6	G1/4	12	15
AH39/630G-H	69,4	**600**	630	210	12	40	Tr670X6	G1/4	12	15
AH39/630-H	64,5	**600**	630	210	12	40	Tr655X6	G1/4	12	15
AH30/630A-H	87,3	**600**	630	258	14	46	Tr670X6	G1/4	12	15
AH240/630G-H	97,9	**600**	630	330	26	40	Tr670X6	G1/4	8,5	15
AH240/630-H	95,1	**600**	630	335	30	45	Tr655X6	G1/4	8,5	15
AH31/630A-H	136	**600**	630	375	14	60	Tr670X6	G1/4	12	15
AH241/630G-H	133	**600**	630	440	26	40	Tr670X6	G1/4	12	15
AH241/630-H	132	**600**	630	450	30	50	Tr655X6	G1/4	12	15
AH32/630AG-H	183	**600**	630	475	14	63	Tr670X6	G1/4	12	15
AH32/630A-H	188	**600**	630	475	14	63	Tr680X6	G1/4	12	15
AH33/630-H	227	**600**	630	550	14	62	Tr680X6	G1/4	12	15
AH39/670G-H	92,9	**630**	670	216	12	41	Tr710X7	G1/4	12	15
AH39/670-H	87,7	**630**	670	216	12	41	Tr695X6	G1/4	12	15
AH30/670A-H	124	**630**	670	280	14	50	Tr710X7	G1/4	12	15
AH240/670G-H	137	**630**	670	348	26	40	Tr710X7	G1/4	8,5	15
AH240/670-H	137	**630**	670	358	30	50	Tr695X6	G1/4	8,5	15
AH31/670A-H	185	**630**	670	395	14	60	Tr710X7	G1/4	12	15
AH241/670G-H	180	**630**	670	452	26	40	Tr710X7	G1/4	12	15
AH241/670-H	183	**630**	670	467	30	55	Tr695X6	G1/4	12	15
AH32/670AG-H	247	**630**	670	500	14	63	Tr710X7	G1/4	12	15
AH32/670A-H	252	**630**	670	500	14	63	Tr720X7	G1/4	12	15
AH33/670-H	303	**630**	670	577	14	62	Tr720X7	G1/4	12	15

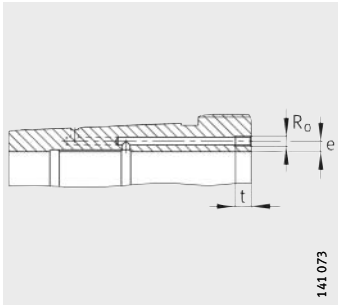

Hydraulic withdrawal sleeve
(suffix H)
Mounting dimensions

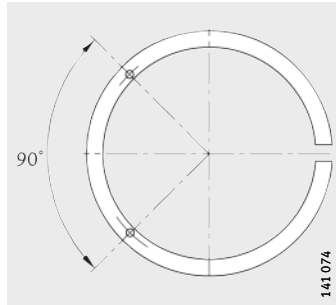

Pump connectors
for hydraulic withdrawal sleeve

Dimension table (continued) · Dimensions in mm

Designation	Mass	Dimensions						Mounting dimensions		
	m ≈kg	d_{1H}	d	l	a ≈	b	d_{2G}	R_0	e	t
AH39/710G-H	105	**670**	710	228	12	43	Tr750X7	G1/4	15	15
AH39/710-H	101	**670**	710	228	12	43	Tr740X7	G1/4	15	15
AH30/710A-H	135	**670**	710	286	16	50	Tr750X7	G1/4	15	15
AH240/710G-H	152	**670**	710	360	26	45	Tr750X7	G1/4	8,5	15
AH240/710-H	151	**670**	710	365	33	50	Tr740X7	G1/4	8,5	15
AH31/710A-H	202	**670**	710	405	16	60	Tr750X7	G1/4	15	15
AH241/710G-H	207	**670**	710	483	26	45	Tr750X7	G1/4	15	15
AH241/710-H	209	**670**	710	493	33	55	Tr740X7	G1/4	15	15
AH32/710AG-H	272	**670**	710	515	16	65	Tr750X7	G1/4	15	15
AH32/710A-H	278	**670**	710	515	16	65	Tr760X7	G1/4	15	15
AH33/710-H	334	**670**	710	595	16	65	Tr760X7	G1/4	15	15
AH39/710G-H	62	**680**	710	163	12	43	Tr750X7	G1/4	15	15
AH38/710-H	58,6	**680**	710	163	12	43	Tr740X7	G1/4	12	15
AH39/750G-H	118	**710**	750	234	12	44	Tr800X7	G1/4	15	15
AH39/750-H	110	**710**	750	234	12	44	Tr780X7	G1/4	15	15
AH30/750A-H	155	**710**	750	300	16	50	Tr800X7	G1/4	15	15
AH240/750G-H	174	**710**	750	380	28	45	Tr800X7	G1/4	8,5	15
AH240/750-H	169	**710**	750	385	35	50	Tr780X7	G1/4	8,5	15
AH31/750A-H	232	**710**	750	425	16	60	Tr800X7	G1/4	15	15
AH241/750G-H	241	**710**	750	520	28	45	Tr800X7	G1/4	15	15
AH241/750-H	239	**710**	750	530	35	55	Tr780X7	G1/4	15	15
AH32/750A-H	312	**710**	750	540	16	65	Tr800X7	G1/4	15	15
AH33/750-H	377	**710**	750	625	16	65	Tr800X7	G1/4	15	15
AH39/800G-H	155	**750**	800	245	12	45	Tr850X7	G1/4	15	15
AH39/800-H	146	**750**	800	245	12	45	Tr830X7	G1/4	15	15
AH30/800A-H	198	**750**	800	308	18	50	Tr850X7	G1/4	15	15
AH240/800G-H	232	**750**	800	395	28	50	Tr850X7	G1/4	15	15
AH240/800-H	221	**750**	800	395	40	50	Tr830X7	G1/4	15	15
AH31/800A-H	297	**750**	800	438	18	63	Tr850X7	G1/4	15	15
AH241/800G-H	311	**750**	800	525	28	50	Tr850X7	G1/4	15	15
AH241/800-H	304	**750**	800	530	40	55	Tr830X7	G1/4	15	15
AH32/800AG-H	391	**750**	800	550	18	62	Tr850X7	G1/4	15	15
AH32/800A-H	396	**750**	800	555	18	67	Tr850X7	G1/4	15	15
AH33/800-H	500	**750**	800	667	18	67	Tr850X7	G1/4	15	15

Withdrawal sleeves

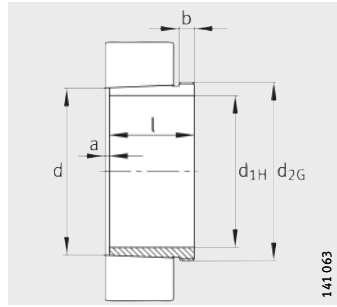

Taper 1:12

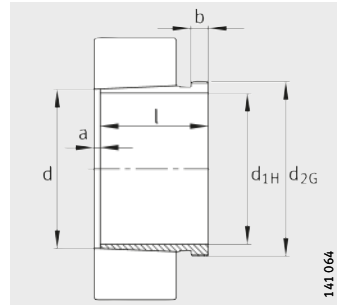

AH240, AH241, AH248
Taper 1:30

Dimension table (continued) · Dimensions in mm

Designation	Mass	Dimensions						Mounting dimensions		
	m ≈kg	d_{1H}	d	l	a ≈	b	d_{2G}	R_0	e	t
AH39/850G-H	176	**800**	850	258	12	50	Tr900X7	G1/4	15	15
AH39/850-H	165	**800**	850	258	12	50	Tr880X7	G1/4	15	15
AH30/850A-H	224	**800**	850	325	18	53	Tr900X7	G1/4	15	15
AH240/850G-H	259	**800**	850	415	30	50	Tr900X7	G1/4	15	15
AH240/850-H	250	**800**	850	418	40	53	Tr880X7	G1/4	15	15
AH31/850A-H	336	**800**	850	462	18	63	Tr900X7	G1/4	15	15
AH241/850G-H	358	**800**	850	560	40	60	Tr900X7	G1/4	15	15
AH241/850-H	345	**800**	850	560	40	60	Tr880X7	G1/4	15	15
AH32/850A-H	450	**800**	850	585	18	70	Tr900X7	G1/4	15	15
AH33/850-H	567	**800**	850	700	18	70	Tr900X7	G1/4	15	15
AH39/900G-H	192	**850**	900	265	12	51	Tr950X8	G1/4	15	15
AH39/900-H	180	**850**	900	265	12	51	Tr930X8	G1/4	15	15
AH30/900A-H	246	**850**	900	335	20	55	Tr950X8	G1/4	15	15
AH240/900G-H	287	**850**	900	430	45	55	Tr950X8	G1/4	15	15
AH240/900-H	274	**850**	900	430	45	55	Tr930X8	G1/4	15	15
AH31/900A-H	368	**850**	900	475	20	63	Tr950X8	G1/4	15	15
AH241/900G-H	390	**850**	900	575	45	60	Tr950X8	G1/4	15	15
AH241/900-H	376	**850**	900	575	45	60	Tr930X8	G1/4	15	15
AH32/900A-H	476	**850**	900	585	20	70	Tr950X8	G1/4	15	15
AH33/900-H	623	**850**	900	720	20	70	Tr950X8	G1/4	15	15
AH39/900G-H	116	**860**	900	193	12	51	Tr950X8	G1/4	15	15
AH38/900-H	109	**860**	900	193	12	51	Tr930X8	G1/4	15	15
AH39/950G-H	216	**900**	950	282	15	51	Tr1000X8	G1/4	15	15
AH39/950-H	203	**900**	950	282	15	51	Tr980X8	G1/4	15	15
AH30/950A-H	277	**900**	950	355	20	55	Tr1000X8	G1/4	15	15
AH240/950G-H	329	**900**	950	467	45	55	Tr1000X8	G1/4	15	15
AH240/950-H	316	**900**	950	467	45	55	Tr980X8	G1/4	15	15
AH31/950A-H	414	**900**	950	500	20	63	Tr1000X8	G1/4	15	15
AH32/950A-H	519	**900**	950	600	20	70	Tr1000X8	G1/4	15	15
AH241/950G-H	435	**900**	950	605	45	60	Tr1000X8	G1/4	15	15
AH241/950-H	421	**900**	950	605	45	60	Tr980X8	G1/4	15	15
AH33/950-H	683	**900**	950	740	20	70	Tr1000X8	G1/4	15	15

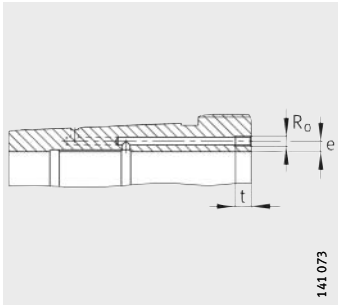

Hydraulic withdrawal sleeve
(suffix H)
Mounting dimensions

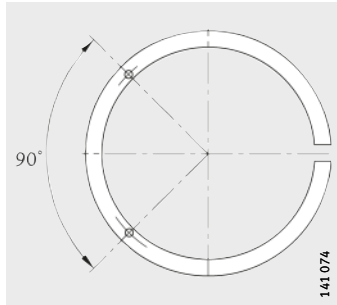

Pump connectors
for hydraulic withdrawal sleeve

Dimension table (continued) · Dimensions in mm

Designation	Mass	Dimensions						Mounting dimensions		
	m ≈kg	d_{1H}	d	l	a ≈	b	d_{2G}	R_0	e	t
AH39/1000G-H	246	**950**	1 000	296	15	52	Tr1060X8	G1/4	15	15
AH39/1000-H	229	**950**	1 000	296	15	52	Tr1035X8	G1/4	15	15
AH30/1 000A-H	309	**950**	1 000	365	22	57	Tr1060X8	G1/4	15	15
AH240/1000G-H	357	**950**	1 000	469	50	57	Tr1060X8	G1/4	15	15
AH240/1000-H	339	**950**	1 000	469	50	57	Tr1035X8	G1/4	15	15
AH31/1 000A-H	471	**950**	1 000	525	22	63	Tr1060X8	G1/4	15	15
AH32/1000A-H	591	**950**	1 000	630	22	70	Tr1060X8	G1/4	15	15
AH241/1000-H	502	**950**	1 000	645	50	65	Tr1060X8	G1/4	15	15
AH33/1000-H	781	**950**	1 000	780	22	70	Tr1060X8	G1/4	15	15
AH39/1060G-H	312	**1 000**	1 060	310	15	52	Tr1120X8	G1/4	15	15
AH39/1060-H	294	**1 000**	1 060	310	15	52	Tr1095X8	G1/4	15	15
AH30/1 060A-H	396	**1 000**	1 060	385	22	60	Tr1120X8	G1/4	15	15
AH240/1060G-H	465	**1 000**	1 060	498	50	60	Tr1120X8	G1/4	15	15
AH240/1060-H	445	**1 000**	1 060	498	50	60	Tr1095X8	G1/4	15	15
AH31/1060A-H	583	**1 000**	1 060	540	22	65	Tr1120X8	G1/4	15	15
AH241/1060-H	632	**1 000**	1 060	665	50	65	Tr1120X8	G1/4	15	15
AH241/1060-H	169	**1 020**	1 060	270	37	52	Tr1095X8	G1/4	15	15
AH30/1 120A-H	451	**1 060**	1 120	410	22	65	Tr1180X8	G1/4	15	15
AH240/1120G-H	524	**1 060**	1 120	527	50	65	Tr1180X8	G1/4	15	15
AH240/1120-H	501	**1 060**	1 120	527	50	65	Tr1155X8	G1/4	15	15
AH241/1120-H	717	**1 060**	1 120	705	50	75	Tr1180X8	G1/4	15	15
AH39/1120G-H	289	**1 070**	1 120	310	15	52	Tr1180X8	G1/4	15	15
AH39/1120-H	271	**1 070**	1 120	310	15	52	Tr1155X8	G1/4	15	15
AH30/1 180A-H	498	**1 120**	1 180	420	22	65	Tr1250X8	G1/4	15	15
AH240/1180G-H	577	**1 120**	1 180	540	50	65	Tr1250X8	G1/4	15	15
AH240/1180-H	543	**1 120**	1 180	540	50	65	Tr1215X8	G1/4	15	15
AH241/1180-H	824	**1 120**	1 180	750	50	80	Tr1250X8	G1/4	15	15
AH39/1180G-H	336	**1 130**	1 180	330	15	55	Tr1250X8	G1/4	15	15
AH39/1180-H	307	**1 130**	1 180	330	15	55	Tr1215X8	G1/4	15	15
AH30/1 250A-H	629	**1 180**	1 250	445	22	70	Tr1320X8	G1/4	15	15
AH240/1250G-H	733	**1 180**	1 250	570	50	70	Tr1320X8	G1/4	15	15
AH240/1250-H	694	**1 180**	1 250	570	50	70	Tr1285X8	G1/4	15	15
AH241/1250-H	1 050	**1 180**	1 250	795	50	85	Tr1320X8	G1/4	15	15

Withdrawal sleeves

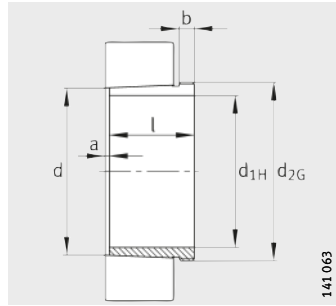

Taper 1:12

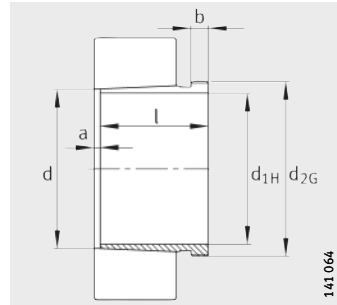

AH240, AH241
Taper 1:30

Dimension table (continued) · Dimensions in mm

Designation	Mass	Dimensions						Mounting dimensions		
	m	d_{1H}	d	l	a	b	d_{2G}	R_0	e	t
	≈kg				≈					
AH39/1250G-H	367	**1 200**	1 250	340	18	55	Tr1320X8	G1/4	15	15
AH39/1250-H	336	**1 200**	1 250	340	18	55	Tr1285X8	G1/4	15	15
AH30/1 320A-H	718	**1 250**	1 320	470	22	70	Tr1400X8	G1/4	15	15
AH240/1320G-H	828	**1 250**	1 320	600	50	70	Tr1400X8	G1/4	15	15
AH240/1320-H	775	**1 250**	1 320	600	50	70	Tr1355X8	G1/4	15	15
AH241/1320-H	1 190	**1 250**	1 320	840	50	90	Tr1400X8	G1/4	15	15
AH39/1320G-H	421	**1 270**	1 320	360	18	55	Tr1400X8	G1/4	15	15
AH39/1320-H	379	**1 270**	1 320	360	18	55	Tr1355X8	G1/4	15	15
AH30/1 400A-H	902	**1 320**	1 400	487	22	75	Tr1500X8	G1/4	15	15
AH240/1400G-H	1 030	**1 320**	1 400	615	50	70	Tr1500X8	G1/4	15	15
AH240/1400-H	944	**1 320**	1 400	615	50	70	Tr1435X8	G1/4	15	15
AH241/1400-H	1 500	**1 320**	1 400	870	50	95	Tr1500X8	G1/4	15	15
AH39/1400G-H	499	**1 350**	1 400	380	20	60	Tr1500X8	G1/4	15	15
AH39/1400-H	429	**1 350**	1 400	380	20	60	Tr1435X8	G1/4	15	15

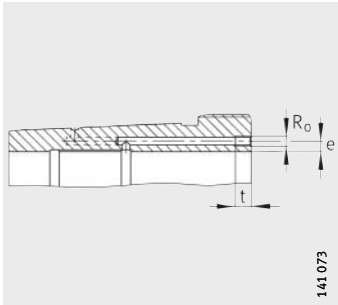

Hydraulic withdrawal sleeve
(suffix H)
Mounting dimensions

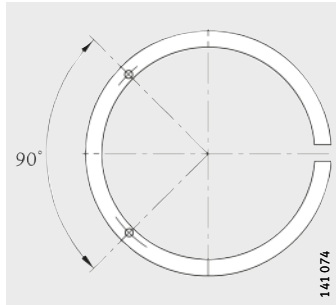

Pump connectors
for hydraulic withdrawal sleeve

Dimension table (continued) · Dimensions in mm

Designation	Mass	Dimensions						Mounting dimensions		
	m ≈kg	d_{1H}	d	l	a ≈	b	d_{2G}	R_0	e	t
AH30/1500A-H	1 260	**1 400**	1 500	537	22	75	Tr1600X8	G1/4	15	15
AH241/1500-H	1 960	**1 400**	1 500	895	50	95	Tr1600X8	G1/4	15	15
AH39/1500G-H	405	**1 450**	1 500	306	20	60	Tr1600X8	G1/4	15	15
AH38/1500-H	365	**1 450**	1 500	306	20	60	Tr1540X8	G1/4	15	15
AH39/1500G-H	563	**1 450**	1 500	400	20	60	Tr1600X8	G1/4	15	15
AH39/1500-H	494	**1 450**	1 500	400	20	60	Tr1540X8	G1/4	15	15

Locknuts

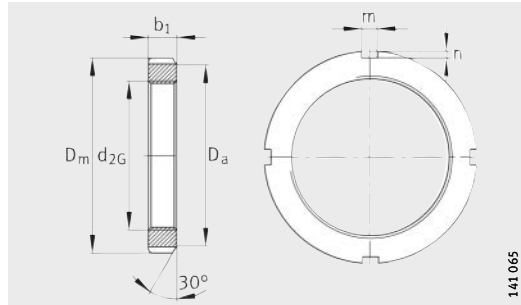

KM, KML, HM..T

Dimension table · Dimensions in mm

Designation		Mass	Dimensions					
Nut	Suitable retainer	m ≈kg	d_{2G}	D_m	b_1	D_a	m	n
KML26	MBL26	0,9	**M130X2**	155	21	145	12	5
KM26	MB26	1,24	**M130X2**	165	21	149	12	5
KM27	MB27	1,55	**M135X2**	175	22	160	14	6
KML28	MBL28	1,01	**M140X2**	165	22	155	12	5
KM28	MB28	1,56	**M140X2**	180	22	160	14	6
KM29	MB29	2,05	**M145X2**	190	24	171	14	6
KML30	MBL30	1,44	**M150X2**	180	24	170	14	5
KM30	MB30	2,06	**M150X2**	195	24	171	14	6
KM31	MB31	2,27	**M155X3**	200	25	182	16	7
KML32	MBL32	1,62	**M160X3**	190	25	180	14	5
KM32	MB32	2,52	**M160X3**	210	25	182	16	7
KM33	MB33	2,7	**M165X3**	210	26	193	16	7
KML34	MBL34	1,72	**M170X3**	200	26	190	16	5
KM34	MB34	2,8	**M170X3**	220	26	193	16	7
KML36	MBL36	1,96	**M180X3**	210	27	200	16	5
KM36	MB36	3,04	**M180X3**	230	27	203	18	8
KML38	MBL38	2,13	**M190X3**	220	28	210	16	5
KM38	MB38	3,34	**M190X3**	240	28	214	18	8
KML40	MBL40	2,9	**M200X3**	240	29	220	18	8
KM40	MB40	3,69	**M200X3**	250	29	226	18	8
HM3044	MS3044	3,21	**Tr220X4**	260	30	242	20	9
HM44T	MB44	5,3	**Tr220X4**	280	32	250	20	10
HM3144	MS3144	4,93	**Tr220X4**	280	32	250	20	10
HM3048	MS3048	5,12	**Tr240X4**	290	34	270	20	10
HM48T	MB48	6,15	**Tr240X4**	300	34	270	20	10
HM3148	MS3144	5,75	**Tr240X4**	300	34	270	20	10
HM3052	MS3048	5,54	**Tr260X4**	310	34	290	20	10
HM52T	MB52	8,05	**Tr260X4**	330	35	300	24	12
HM3152	MS3152	7,43	**Tr260X4**	330	36	300	24	12
HM3056	MS3056	6,61	**Tr280X4**	330	38	310	24	10
HM56T	MB56	8,9	**Tr280X4**	350	36	320	24	12
HM3156	MS3152	8,26	**Tr280X4**	350	38	320	24	12

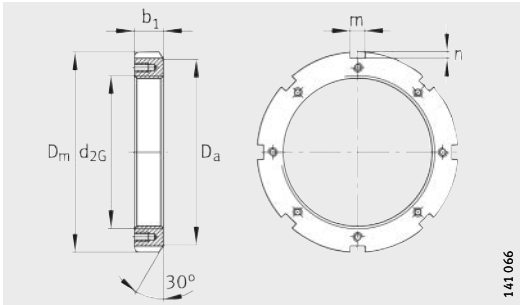

HM30, HM31

Dimension table (continued) · Dimensions in mm

Designation		Mass	Dimensions					
Nut	Suitable retainer	m ≈kg	d_{2G}	D_m	b_1	D_a	m	n
HM3060	MS3060	9,48	**Tr300X4**	360	42	336	24	12
HM3160	MS3160	11,4	**Tr300X4**	380	40	340	24	12
HM3064	MS3064	10,1	**Tr320X5**	380	42	356	24	12
HM3164	MS3164	12,8	**Tr320X5**	400	42	360	24	12
HM3068	MS3064	11,5	**Tr340X5**	400	45	376	24	12
HM3168	MS3168	23	**Tr340X5**	440	55	400	28	15
HM3072	MS3072	11,9	**Tr360X5**	420	45	394	28	13
HM3172	MS3168	25,7	**Tr360X5**	460	58	420	28	15
HM3076	MS3076	15,9	**Tr380X5**	450	48	422	28	14
HM3176	MS3176	30	**Tr380X5**	490	60	440	32	18
HM3080	MS3076	18,2	**Tr400X5**	470	52	442	28	14
HM3180	MS3180	35,7	**Tr400X5**	520	62	460	32	18
HM3084	MS3084	18,9	**Tr420X5**	490	52	462	32	14
HM3184	MS3180	43,4	**Tr420X5**	540	70	490	32	18
HM3088	MS3088	26,5	**Tr440X5**	520	60	490	32	15
HM3188	MS3188	44,3	**Tr440X5**	560	70	510	36	20
HM3092	MS3088	27,7	**Tr460X5**	540	60	510	32	15
HM3192	MS3188	53,8	**Tr460X5**	580	75	540	36	20
HM3096	MS3096	28,7	**Tr480X5**	560	60	530	36	15
HM3196	MS3196	62,2	**Tr480X5**	620	75	560	36	20
HM30/500	MS3096	34	**Tr500X5**	580	68	550	36	15
HM31/500	MS31/500	62,1	**Tr500X5**	630	80	580	40	23
HM30/530	MS30/530	44,7	**Tr530X6**	630	68	590	40	20
HM31/530	MS31/530	71,2	**Tr530X6**	670	80	610	40	23
HM30/560	MS30/560	46,2	**Tr560X6**	650	75	610	40	20
HM31/560	MS31/560	85,6	**Tr560X6**	710	85	650	45	25
HM30/600	MS30/530	55,9	**Tr600X6**	700	75	660	40	20
HM31/600	MS31/560	91,7	**Tr600X6**	750	85	690	45	25
HM30/630	MS30/630	58,3	**Tr630X6**	730	75	690	45	20
HM31/630	MS31/630	122	**Tr630X6**	800	95	730	50	28
HM30/670	MS30/670	73,8	**Tr670X6**	780	80	740	45	20
HM31/670	MS31/670	156	**Tr670X6**	850	106	775	50	28
HM30/710	MS30/710	94,8	**Tr710X7**	830	90	780	50	25
HM31/710	MS31/710	173	**Tr710X7**	900	106	825	55	30

Locknuts

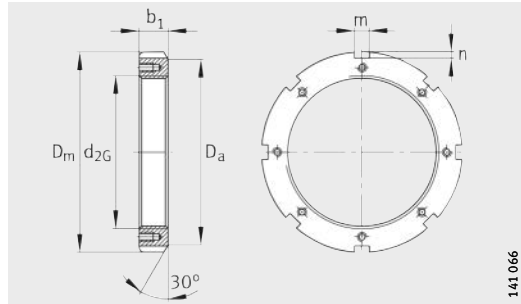

HM30, HM31, Z-1..HM

Dimension table (continued) · Dimensions in mm

Designation		Mass	Dimensions					
Nut	Suitable retainer	m ≈kg	d_{2G}	D_m	b_1	D_a	m	n
HM30/750	MS30/750	99,5	**Tr750X7**	870	90	820	55	25
HM31/750	MS31/750	202	**Tr750X7**	950	112	875	60	34
HM30/800	MS30/750	106	**Tr800X7**	920	90	870	55	25
HM31/800	MS31/750	215	**Tr800X7**	1 000	112	925	60	34
HM30/850	MS30/850	113	**Tr850X7**	980	90	925	60	25
HM31/850	MS31/850	246	**Tr850X7**	1 060	118	975	70	38
HM30/900	MS30/850	135	**Tr900X7**	1 030	100	975	60	25
HM31/900	MS31/900	293	**Tr900X7**	1 120	125	1 030	70	38
HM30/950	MS30/950	143	**Tr950X8**	1 080	100	1 025	60	25
HM31/950	MS31/950	310	**Tr950X8**	1 170	125	1 080	70	38
HM30/1000	MS30/1000	165	**Tr1000X8**	1 140	100	1 085	60	25
HM31/1000	MS31/1000	361	**Tr1000X8**	1 240	125	1 140	70	38
Z-195070.01.HM	MS30/560	94	**Tr1060X8**	1 150	80	1 108	40	21
HM30/1060	MS30/1000	175	**Tr1060X8**	1 200	100	1 145	60	25
HM31/1060	MS31/1000	386	**Tr1060X8**	1 300	125	1 210	70	38
HM30/1120	MS30/1000	185	**Tr1120X8**	1 260	100	1 205	60	25
HM31/1120	MS31/1000	427	**Tr1120X8**	1 360	125	1 270	70	38
HM30/1180	MS30/1000	196	**Tr1180X8**	1 320	100	1 265	60	25
HM31/1180	MS31/1000	459	**Tr1180X8**	1 420	125	1 330	70	38
HM30/1250	MS30/1000	233	**Tr1250X8**	1 390	110	1 335	60	25
HM31/1250	MS31/1000	485	**Tr1250X8**	1 490	125	1 400	70	38
HM30/1320	MS30/1000	245	**Tr1320X8**	1 460	110	1 405	60	25
HM31/1320	MS31/1000	511	**Tr1320X8**	1 560	125	1 470	70	38
HM30/1400	MS30/1000	259	**Tr1400X8**	1 540	110	1 485	60	25
HM31/1400	MS31/1000	562	**Tr1400X8**	1 640	130	1 550	70	38
HM30/1500	MS30/1500	297	**Tr1500X8**	1 650	110	1 595	60	25
HM31/1500	MS31/1000	601	**Tr1500X8**	1 740	130	1 650	70	38
Z-195077.01.HM	MS30/850	273	**Tr1600X8**	1 730	100	1 675	60	25
Z-195078.01.HM	MS30/850	273	**Tr1700X8**	17 830	100	1 775	60	25

Shaft nuts

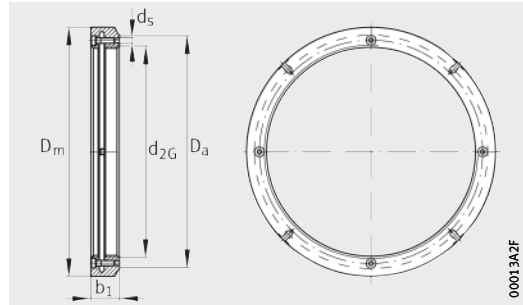

HMZ, HMZ30

Dimension table · Dimensions in mm

Designation	Mass	Dimensions					Clamping screw	Tightening torque per clamping screw
	m	d_{2G}	D_m	b_1	D_a	d_s	Quantity	M_{aL}
	≈kg							Nm
HMZ26	1,3	**M130X2**	165	21	149	M6	4	11
HMZ27	1,6	**M135X2**	175	22	160	M6	4	11
HMZ28	1,6	**M140X2**	180	22	160	M6	4	11
HMZ29	2,2	**M145X2**	190	24	171	M6	4	11
HMZ30	2,2	**M150X2**	195	24	171	M6	4	11
HMZ31	2,4	**M155X3**	200	25	182	M6	4	11
HMZ32	2,6	**M160X3**	210	25	182	M6	4	11
HMZ33	2,8	**M165X3**	210	26	193	M8	4	27
HMZ34	2,9	**M170X3**	220	26	193	M8	4	27
HMZ36	3,2	**M180X3**	230	27	203	M8	4	27
HMZ38	3,5	**M190X3**	240	28	214	M8	4	27
HMZ40	3,9	**M200X3**	250	29	226	M8	4	27
HMZ3044	3,4	**Tr220X4**	260	30	242	M8	4	27
HMZ3048	5,4	**Tr240X4**	290	34	270	M10	4	54
HMZ3052	5,8	**Tr260X4**	310	34	290	M10	4	54
HMZ3056	6,9	**Tr280X4**	330	38	310	M10	4	54
HMZ3060	10	**Tr300X4**	360	42	336	M10	4	54
HMZ3064	10,6	**Tr320X5**	380	42	356	M10	4	54
HMZ3068	12,1	**Tr340X5**	400	45	376	M12	4	93
HMZ3072	12,5	**Tr360X5**	420	45	394	M12	4	93
HMZ3076	16,7	**Tr380X5**	450	48	422	M12	4	93
HMZ3080	19,1	**Tr400X5**	470	52	442	M16	4	230
HMZ3084	19,8	**Tr420X5**	490	52	462	M16	4	230
HMZ3088	27,8	**Tr440X5**	520	60	490	M16	4	230
HMZ3092	29,1	**Tr460X5**	540	60	510	M16	4	230
HMZ3096	30,1	**Tr480X5**	560	60	530	M16	4	230
HMZ30/500	35,7	**Tr500X5**	580	68	550	M20	4	464
HMZ30/530	46,9	**Tr530X6**	630	68	590	M20	4	464
HMZ30/560	48,5	**Tr560X6**	650	75	610	M20	4	464
HMZ30/600	58,7	**Tr600X6**	700	75	660	M20	4	464
HMZ30/630	61,2	**Tr630X6**	730	75	690	M20	4	464
HMZ30/670	77,5	**Tr670X6**	780	80	740	M20	4	464
HMZ30/710	99,5	**Tr710X7**	830	90	780	M20	4	464

Shaft nuts

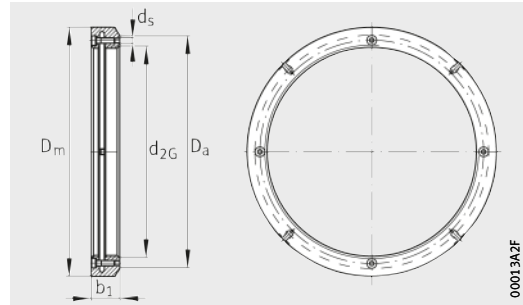

HMZ30

Dimension table · Dimensions in mm

Designation	Mass	Dimensions					Clamping screw	Tightening torque per clamping screw
	m	d_{2G}	D_m	b_1	D_a	d_s	Quantity	M_{aL}
	≈kg							Nm
HMZ30/750	105	**Tr750X7**	870	90	820	M20	4	464
HMZ30/800	111	**Tr800X7**	920	90	870	M20	4	464
HMZ30/850	119	**Tr850X7**	980	90	925	M20	4	464
HMZ30/900	142	**Tr900X7**	1 030	100	975	M24	8	798
HMZ30/950	150	**Tr950X8**	1 080	100	1 025	M24	8	798
HMZ30/1000	173	**Tr1000X8**	1 140	100	1 085	M24	8	798
HMZ30/1060	184	**Tr1060X8**	1 200	100	1 145	M24	8	798
HMZ30/1120	194	**Tr1120X8**	1 260	100	1 205	M24	8	798
HMZ30/1180	206	**Tr1180X8**	1 320	100	1 265	M24	8	798
HMZ30/1250	245	**Tr1250X8**	1 390	110	1 335	M24	8	798
HMZ30/1320	257	**Tr1320X8**	1 460	110	1 405	M24	8	798
HMZ30/1400	272	**Tr1400X8**	1 540	110	1 485	M24	8	798
HMZ30/1500	312	**Tr1500X8**	1 650	110	1 595	M24	8	798

Tab washers

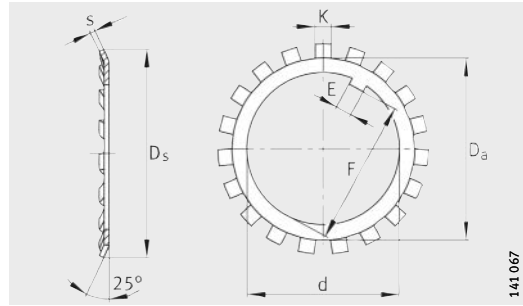

MB, MBL

Dimension table · Dimensions in mm

Designation	Mass	Dimensions						
	m 100 piece ≈kg	d	D_s	s	D_a	E[1)]	F	K
MBL26	8,7	**130**	161	2	145	14	125	12
MB26	11,3	**130**	175	2	149	14	125	12
MB27	14,4	**135**	185	2	160	14	130	14
MBL28	10,9	**140**	171	2	155	16	135	12
MB28	14,2	**140**	192	2	160	16	135	14
MB29	16,8	**145**	202	2	171	16	140	14
MBL30	11,3	**150**	188	2	170	16	145	14
MB30	15,5	**150**	205	2	171	16	145	14
MB31	20,9	**155**	212	2,5	182	16	147,5	16
MBL32	16,2	**160**	199	2,5	180	18	154	14
MB32	22,2	**160**	217	2,5	182	18	154	16
MB33	24,1	**165**	222	2,5	193	18	157,5	16
MBL34	17	**170**	211	2,5	190	18	164	16
MB34	24,7	**170**	232	2,5	193	18	164	16
MBL36	18	**180**	221	2,5	200	20	174	16
MB36	26,8	**180**	242	2,5	203	20	174	18
MBL38	20,5	**190**	231	2,5	210	20	184	16
MB38	27,8	**190**	252	2,5	214	20	184	18
MBL40	21,4	**200**	248	2,5	222	20	194	18
MB40	29,3	**200**	262	2,5	226	20	194	18
MB44	40	**220**	292	3	250	24	213	20
MB48	40	**240**	312	3	270	24	233	20
MB52	60	**260**	342	3	300	28	253	24
MB56	62	**280**	362	3	320	28	273	24

1) The dimension E can be used as a minimum dimension for the slot width in shafts.

Retaining brackets

With hexagon head cap screw

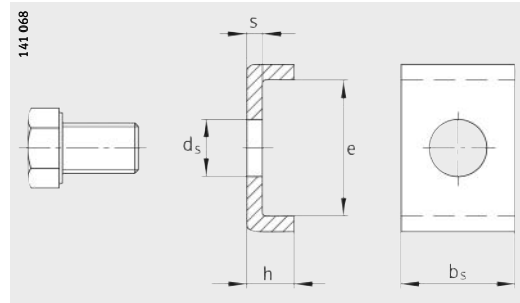

Dimension table · Dimensions in mm

Designation		Tightening torque	Mass	Dimensions					Mounting dimensions Shaft slot	
Retaining bracket Complete	Hexagon head cap screw[1)]	Nm	m ≈kg	s	b_s	h	d_s	e	b_w	t
MS3044	M6X10	10	0,026	4	20	12	7	13,5	22	9
MS3144	M8X16	25	0,038	4	20	12	9	22,5	22	9
MS3048	M8X16	25	0,035	4	20	12	9	17,5	22	9
MS3152	M10X20	51	0,056	4	24	12	11	25,5	26	9
MS3056	M8X16	25	0,04	4	24	12	9	17,5	26	9
MS3060	M8X16	25	0,043	4	24	12	9	20,5	26	9
MS3160	M10X20	51	0,059	4	24	12	12	30,5	26	9
MS3064	M8X16	25	0,057	5	24	15	9	21	26	10
MS3164	M10X20	51	0,074	5	24	15	12	31	26	10
MS3168	M12X22	87	0,115	5	28	15	14	38	30	10
MS3072	M8X16	25	0,064	5	28	15	9	20	30	10
MS3076	M10X20	51	0,076	5	28	15	12	24	30	10
MS3176	M12X22	87	0,115	5	32	15	14	40	34	10
MS3180	M16X25	215	0,154	5	32	15	18	45	34	10
MS3084	M10X20	51	0,085	5	32	15	12	24	34	10
MS3088	M12X22	87	0,1	5	32	15	14	28	34	10
MS3188	M16X25	215	0,163	5	36	15	18	43	38	10
MS3096	M12X22	87	0,109	5	36	15	14	28	38	12
MS3196	M16X25	215	0,177	5	36	15	18	53	38	12

[1)] Up to thread M16: self-retaining screw.

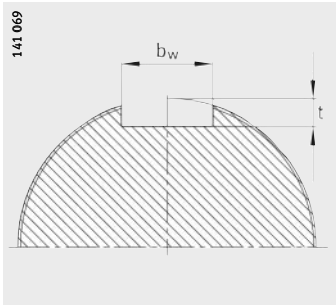

Shaft

Dimension table (continued) · Dimensions in mm

Designation		Tightening torque	Mass	Dimensions					Mounting dimensions Shaft slot	
Retaining bracket Complete	Hexagon head cap screw[1)]	Nm	m ≈kg	s	b_s	h	d_s	e	b_w	t
MS31/500	M16X25	215	0,178	5	40	15	18	45	42	12
MS30/530	M16X25	215	0,223	7	40	21	18	34	42	14
MS31/530	M20X40	430	0,347	7	40	21	22	51	42	14
MS30/560	M16X25	215	0,212	7	40	21	18	29	42	14
MS31/560	M20X40	430	0,38	7	45	21	22	54	47	14
MS30/630	M16X25	215	0,244	7	45	21	18	34	47	14
MS31/630	M20X40	430	0,426	7	50	21	22	61	52	14
MS30/670	M16X25	215	0,257	7	45	21	18	39	47	14
MS31/670	M20X40	430	0,439	7	50	21	22	66	52	15
MS30/710	M16X25	215	0,279	7	50	21	18	39	52	15
MS31/710	M24X45	740	0,58	7	55	21	26	69	57	15
MS30/750	M16X25	215	0,301	7	55	21	18	39	57	15
MS31/750	M24X45	740	0,614	7	60	21	26	70	62	15
MS30/850	M20X40	430	0,426	7	60	21	22	44	62	15
MS31/850	M24X45	740	0,679	7	70	21	26	71	72	16
MS31/900	M24X45	740	0,698	7	70	21	26	76	72	16
MS30/950	M20X40	430	0,433	7	60	21	22	46	62	16
MS31/950	M24X45	740	0,706	7	70	21	26	78	72	16
MS30/1000	M20X40	430	0,449	7	60	21	22	51	62	16
MS31/1000	M24X45	740	0,744	7	70	21	26	88	72	16
MS30/1500	M20X40	430	0,466	7	60	21	22	56	62	16

1) From thread M20: standardised hexagon head cap screw with retainer.

Hydraulic nuts

Threads in metric sizes

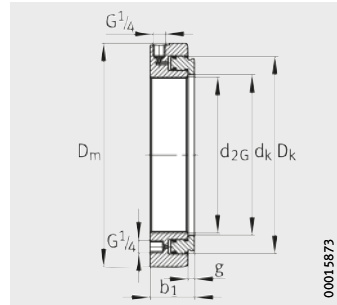

Dimension table · Dimensions in mm

Designation	Mass	Dimensions								Drive-up force at 800 bar
	m ≈kg	d_{2G}	D_m	b_1	D_k	d_k	g	Stroke length	Piston surface cm^2	kN
HYDNUT150	6,8	**M150X2**	220	46	191	151	7	5	75,3	602
HYDNUT155	7,2	**M155X3**	225	46	200	156	7	5	81,8	654
HYDNUT160	8	**M160X3**	235	47	206	161	7	6	87,2	698
HYDNUT165	8,2	**M165X3**	240	47	211	166	7	6	92,3	739
HYDNUT170	8,6	**M170X3**	245	48	216	171	7	6	94,7	758
HYDNUT180	9,1	**M180X3**	255	48	227	181	7	6	103	824
HYDNUT190	10,5	**M190X3**	270	50	240	191	8	8	116	928
HYDNUT200	11,5	**M200X3**	280	50	251	201	8	8	125	1 000
HYDNUT205	12,3	**Tr205X4**	290	51	258	207	8	8	132,2	1 058
HYDNUT210	12,7	**Tr210X4**	295	52	263	212	9	9	135	1 080
HYDNUT215	13,2	**Tr215X4**	300	53	268	217	9	9	137,7	1 102
HYDNUT220	13,5	**Tr220X4**	305	53	273	222	9	9	144,2	1 154
HYDNUT225	15	**Tr225X4**	315	54	282	227	9	10	153	1 224
HYDNUT230	15,3	**Tr230X4**	320	54	287	232	9	10	160	1 280
HYDNUT235	15,5	**Tr235X4**	325	54	290	237	9	10	161,7	1 294
HYDNUT240	16,1	**Tr240X4**	330	55	296	242	9	10	165,3	1 323
HYDNUT250	18	**Tr250X4**	345	56	310	252	10	10	182,2	1 458
HYDNUT260	19	**Tr260X4**	355	57	319	262	10	11	188	1 504
HYDNUT270	21,1	**Tr270X4**	370	58	332	272	10	12	196	1 568
HYDNUT275	21,5	**Tr275X4**	375	58	337	277	10	12	204	1 632
HYDNUT280	22,3	**Tr280X4**	380	59	342	282	10	12	211,7	1 694
HYDNUT290	23,3	**Tr290X4**	390	60	352	292	10	13	218,3	1 747
HYDNUT295	25	**Tr295X4**	400	60	362	297	10	13	230	1 840
HYDNUT300	25,8	**Tr300X4**	405	61	365	302	10	13	237	1 896
HYDNUT310	27	**Tr310X5**	415	62	375	312	10	13	249	1 992
HYDNUT315	27,5	**Tr315X5**	420	62	380	317	10	13	252,5	2 020
HYDNUT320	29,9	**Tr320X5**	430	63	389	322	10	14	264	2 112
HYDNUT330	31	**Tr330X5**	440	64	398	332	11	14	270,8	2 166
HYDNUT335	32	**Tr335X5**	445	65	403	337	11	14	275	2 200
HYDNUT340	32,5	**Tr340X5**	450	65	408	342	11	14	284	2 272
HYDNUT345	33,5	**Tr345X5**	455	66	413	347	11	14	288	2 304
HYDNUT350	35	**Tr350X5**	465	66	422	352	11	14	306	2 448
HYDNUT355	36,5	**Tr355X5**	470	67	427	357	11	15	304	2 432

Dimension table (continued) · Dimensions in mm

Designation	Mass	Dimensions								Drive-up force at 800 bar
	m ≈kg	d_{2G}	D_m	b_1	D_k	d_k	g	Stroke length	Piston surface cm^2	kN
HYDNUT360	37	**Tr360X5**	475	67	431	362	11	15	313	2 504
HYDNUT365	38	**Tr365X5**	482	67	436	367	11	15	317	2 536
HYDNUT370	40	**Tr370X5**	490	68	444	372	11	16	323	2 584
HYDNUT375	41	**Tr375X5**	495	68	450	377	11	16	334	2 672
HYDNUT380	41,5	**Tr380X5**	500	69	454	382	11	16	337	2 696
HYDNUT385	42	**Tr385X5**	505	69	460	387	11	16	348	2 784
HYDNUT395	43	**Tr395X5**	512	69	470	397	11	16	356	2 848
HYDNUT400	47	**Tr400X5**	525	71	477	402	11	17	368	2 944
HYDNUT410	48	**Tr410X5**	535	71	485	412	11	17	382	3 056
HYDNUT415	49	**Tr415X5**	540	71	490	417	11	17	386	3 088
HYDNUT420	50	**Tr420X5**	545	72	495	422	12	17	390	3 120
HYDNUT430	52	**Tr430X5**	555	74	505	432	12	17	398	3 184
HYDNUT435	53	**Tr435X5**	560	74	510	437	12	17	403	3 224
HYDNUT440	54	**Tr440X5**	565	74	519	442	12	17	425	3 400
HYDNUT450	58	**Tr450X5**	580	76	530	452	12	17	442	3 536
HYDNUT460	59,5	**Tr460X5**	590	76	540	462	12	18	450	3 600
HYDNUT470	61	**Tr470X5**	600	76	550	472	12	18	459	3 672
HYDNUT480	63	**Tr480X5**	612	76	560	482	12	18	460	3 680
HYDNUT490	69	**Tr490X5**	625	80	575	492	13	19	506	4 048
HYDNUT500	70	**Tr500X5**	635	80	585	502	13	20	523	4 185
HYDNUT510	72	**Tr510X6**	645	80	595	512	13	20	533	4 264
HYDNUT520	75	**Tr520X6**	657	80	605	522	13	21	542	4 336
HYDNUT530	80	**Tr530X6**	670	83	617	532	13	22	562	4 496
HYDNUT540	82,5	**Tr540X6**	680	83	628	542	13	22	581	4 648
HYDNUT550	84,5	**Tr550X6**	692	83	639	552	13	22	592	4 736
HYDNUT560	88	**Tr560X6**	705	83	650	562	13	22	612	4 896
HYDNUT570	92	**Tr570X6**	715	85	660	572	13	23	631	5 048
HYDNUT580	93	**Tr580X6**	725	85	670	582	13	23	641	5 128
HYDNUT590	98	**Tr590X6**	740	85	685	592	13	23	666	5 328
HYDNUT600	100	**Tr600X6**	750	85	695	603	13	23	677	5 416
HYDNUT610	104	**Tr610X6**	760	88	705	613	14	24	687	5 496
HYDNUT625	107	**Tr625X6**	775	88	720	628	14	24	702	5 516
HYDNUT630	109	**Tr630X6**	780	88	725	633	14	24	728	5 824

Hydraulic nuts

Threads in metric sizes

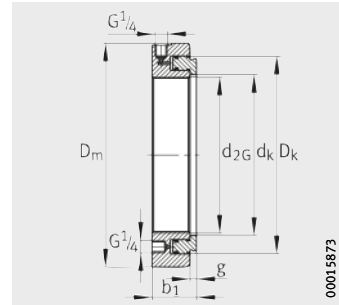

Dimension table (continued) · Dimensions in mm

Designation	Mass	Dimensions								Drive-up force at 800 bar
	m	d_{2G}	D_m	b_1	D_k	d_k	g	Stroke length	Piston surface	
	≈kg								cm^2	kN
HYDNUT650	115	**Tr650X6**	805	88	748	653	14	24	763	6 104
HYDNUT655	116	**Tr655X6**	810	88	753	658	14	24	768	6 144
HYDNUT670	121	**Tr670X6**	825	90	768	673	14	24	795	6 360
HYDNUT680	124	**Tr680X6**	837	90	780	683	14	24	819	6 552
HYDNUT690	128	**Tr690X6**	850	90	792	693	14	25	844	6 752
HYDNUT695	133	**Tr695X6**	855	93	798	698	14	25	862	6 896
HYDNUT710	136	**Tr710X7**	870	93	812	713	14	25	877	7 020
HYDNUT720	144	**Tr720X7**	883	95	825	723	15	25	928	7 424
HYDNUT740	154	**Tr740X7**	910	95	848	743	15	25	991	7 928
HYDNUT750	160	**Tr750X7**	922	96	862	753	15	26	1 033	8 265
HYDNUT760	165	**Tr760X7**	935	96	872	763	15	26	1 045	8 360
HYDNUT780	172	**Tr780X7**	955	98	890	783	15	28	1 068	8 544
HYDNUT800	170	**Tr800X7**	970	98	909	803	16	28	1 079	8 632
HYDNUT830	176	**Tr830X7**	1 000	98	938	833	16	29	1 101	8 808
HYDNUT850	180	**Tr850X7**	1 020	98	960	853	16	29	1 156	9 248
HYDNUT880	185	**Tr880X7**	1 050	98	988	883	16	29	1 148	9 184
HYDNUT900	194	**Tr900X7**	1 070	100	1 012	903	16	29	1 251	10 008
HYDNUT930	200	**Tr930X8**	1 100	100	1 042	933	16	30	1 290	10 320
HYDNUT950	210	**Tr950X8**	1 120	100	1 065	953	16	30	1 365	10 920
HYDNUT1000	228	**Tr1000X8**	1 170	100	1 123	1 003	16	30	1 490	11 920
HYDNUT1060	300	**Tr1060X8**	1 255	115	1 185	1 063	18	32	1 610	12 880
HYDNUT1080	322	**Tr1080X8**	1 280	118	1 207	1 083	18	33	1 680	13 440
HYDNUT1120	392	**Tr1120X8**	1 340	125	1 260	1 123	19	36	1 900	15 200
HYDNUT1180	503	**Tr1180X8**	1 430	135	1 315	1 183	22	39	2 100	16 800



Hydraulic nuts

Threads in inch sizes

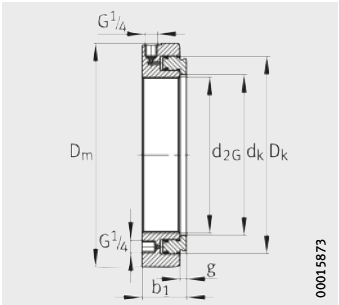

Dimension table · Dimensions in mm

Designation	Mass m ≈kg	Thread d_{2G} mm	Thread d_{2G} inch	Flank diameter mm	Flank diameter inch	Number of turns per inch
HYDNUT150-INCH	6,8	**149,555**	**5,888**	148,181	5,8339	12
HYDNUT160-INCH	8	**159,614**	**6,284**	157,551	6,2028	8
HYDNUT170-INCH	8,6	**169,139**	**6,659**	167,067	6,5778	8
HYDNUT180-INCH	8,1	**179,476**	**7,066**	177,414	6,9848	8
HYDNUT190-INCH	10,5	**189,789**	**7,472**	187,726	7,3908	8
HYDNUT200-INCH	11,5	**199,314**	**7,847**	197,251	7,7658	8
HYDNUT220-INCH	13,5	**219,151**	**8,628**	217,089	8,5468	8
HYDNUT240-INCH	16,1	**239,827**	**9,442**	237,076	9,3337	6
HYDNUT260-INCH	19	**258,877**	**10,192**	256,126	10,0837	6
HYDNUT280-INCH	22,3	**279,502**	**11,004**	276,751	10,8975	6
HYDNUT300-INCH	25,8	**299,339**	**11,785**	296,588	11,6767	6
HYDNUT320-INCH	29,9	**319,075**	**12,562**	316,324	12,4537	6
HYDNUT340-INCH	32,5	**338,811**	**13,339**	335,763	13,219	5
HYDNUT360-INCH	37	**359,918**	**14,17**	356,87	14,05	5
HYDNUT380-INCH	41,5	**379,908**	**14,957**	376,86	14,837	5
HYDNUT400-INCH	47	**399,923**	**15,745**	396,875	15,625	5
HYDNUT420-INCH	50	**419,913**	**16,532**	416,865	16,412	5
HYDNUT440-INCH	54	**439,903**	**17,319**	436,855	17,199	5
HYDNUT460-INCH	59,5	**459,918**	**18,107**	456,87	17,987	5
HYDNUT480-INCH	63	**479,908**	**18,894**	476,86	18,774	5
HYDNUT500-INCH	70	**499,923**	**19,682**	496,875	19,562	5
HYDNUT530-INCH	80	**530,022**	**20,867**	526,339	20,722	4

Dimensions							Drive-up force at 800 bar
D_m	b_1	D_k	d_k	g	Stroke length	Piston surface cm^2	kN
220	46	191	151	7	5	75,3	602
235	47	206	161	7	6	87,2	698
245	48	216	171	7	6	94,7	758
255	48	227	181	7	6	103	824
270	50	240	191	8	8	116	928
280	50	251	201	8	8	125	1 000
305	53	273	222	9	9	144,2	1 154
330	55	296	242	9	10	165,3	1 323
355	57	319	262	10	11	188	1 504
380	59	342	282	10	12	211,7	1 694
405	61	365	302	10	13	237	1 896
430	63	389	322	10	14	264	2 112
450	65	408	342	11	14	284	2 272
475	67	431	362	11	15	313	2 504
500	69	454	382	11	16	337	2 696
525	71	477	402	11	17	368	2 944
545	72	495	422	11	17	390	3 120
565	74	519	442	12	17	425	3 400
590	76	540	462	12	18	450	3 600
612	76	560	482	12	18	460	3 680
635	80	585	502	13	20	523	4 185
670	83	617	542	13	22	562	4 496



Hydraulic nuts

Increased capacity design

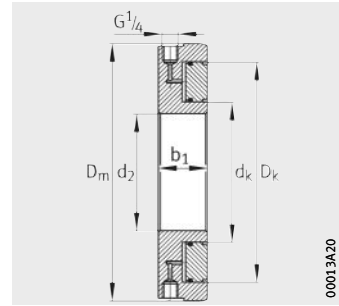

Dimension table · Dimensions in mm

Designation	Mass	Dimensions							Drive-up force at 800 bar
	m	d_2	D_m	b_1	D_k	d_k	Stroke length	Piston surface	
	≈kg	H7						cm^2	kN
HYDNUT150-HEAVY	12,5	**150**	270	40	226	180	10	147	1 170
HYDNUT175-HEAVY	17	**175**	305	45	250	205	11	161	1 280
HYDNUT200-HEAVY	21	**200**	330	50	280	230	12	200	1 600
HYDNUT225-HEAVY	23	**225**	365	50	313	255	12	259	2 070
HYDNUT250-HEAVY	28	**250**	390	50	345	280	12	319	2 550
HYDNUT275-HEAVY	34	**275**	430	50	380	305	12	403	3 220
HYDNUT300-HEAVY	44	**300**	470	55	410	335	13	439	3 510
HYDNUT325-HEAVY	49	**325**	500	55	440	360	13	503	4 020
HYDNUT350-HEAVY	57	**350**	540	55	475	385	13	608	4 860
HYDNUT375-HEAVY	65	**375**	575	55	510	410	13	723	5 780
HYDNUT400-HEAVY	83	**400**	620	60	545	440	15	812	6 500
HYDNUT425-HEAVY	90	**425**	650	60	575	465	15	899	7 190
HYDNUT450-HEAVY	100	**450**	690	65	610	490	17	1 037	8 290
HYDNUT475-HEAVY	120	**475**	725	65	642	515	17	1 154	9 230
HYDNUT500-HEAVY	142	**500**	760	70	675	540	20	1 288	10 300
HYDNUT525-HEAVY	158	**525**	800	70	710	565	20	1 452	11 620
HYDNUT550-HEAVY	183	**550**	835	75	742	590	22	1 590	12 720
HYDNUT575-HEAVY	197	**575**	870	75	775	615	22	1 747	13 980
HYDNUT600-HEAVY	230	**600**	910	80	808	645	25	1 860	14 880
HYDNUT625-HEAVY	248	**625**	945	80	840	670	25	2 016	16 130
HYDNUT650-HEAVY	282	**650**	980	85	875	695	28	2 220	17 760
HYDNUT675-HEAVY	307	**675**	1 020	85	906	720	28	2 375	19 000
HYDNUT700-HEAVY	351	**700**	1 060	90	940	750	30	2 522	20 180
HYDNUT750-HEAVY	431	**750**	1 130	95	1 007	800	32	2 938	23 500
HYDNUT800-HEAVY	500	**800**	1 205	100	1 070	855	35	3 250	26 000
HYDNUT850-HEAVY	583	**850**	1 275	105	1 135	905	38	3 685	29 480
HYDNUT900-HEAVY	688	**900**	1 350	110	1 200	960	40	4 072	32 580



FAG



Arcanol rolling bearing greases

Arcanol rolling bearing greases

		Page
Product overview	Arcanol rolling bearing greases	1048
Features	Containers	1049
	Arcanol greases	1050



Arcanol greases



Arcanol rolling bearing greases

Features

Schaeffler developed the range of Arcanol rolling bearing greases from a large number of lubricants. These greases offer very good preconditions for favourable running behaviour of bearings and a long life and high operational reliability of the bearing arrangement.

The areas of application of Arcanol greases were determined under widely differing operating conditions and with rolling bearings of all types by means of modern testing methods and testing systems.

Graduated range

The range is graduated such that almost all areas of application can be covered to an optimum extent.

For automatic or manual grease lubrication

For grease lubrication, we supply automatic lubricators of the designs CHAMPION and CONCEPT8, filled with Arcanol greases from FAG.

For manual lubrication, we supply a grease gun, comprising a manual grease gun ARCA-GREASE-GUN and the matching armoured hose ARCA-GREASE-GUN.HOSE.

Containers

Arcanol rolling bearing greases are available in tubes, cartridges, cans, buckets, hobbocks and drums. The following table shows which grease grades are supplied in which containers.

Grease container sizes

Arcanol grease[1)]	Tube			Car-tridge	Can	Bucket		Hobbock		Drum
	20 g	70 g	250 g	400 g	1 kg	5 kg	10 kg	25 kg	50 kg	180 kg
MULTITOP	–	–	●	●	●	●	●	●	–	●
MULTI3	–	–	●	●	●	●	●	●	–	●
LOAD150	–	–	–	●	●	–	●	–	–	–
LOAD220	–	–	–	–	●	–	●	●	–	●
LOAD400	–	–	–	●	●	●	●	●	●	●
LOAD1000	–	–	–	–	–	●	–	●	–	●
TEMP90	●	–	–	●	●	●	–	●	–	●
TEMP110	–	–	–	●	●	–	–	–	●	–
TEMP120	–	–	–	–	●	●	–	●	–	–
TEMP200	–	●	–	–	●	–	–	–	–	–
SPEED2,6	–	–	●	–	●	–	–	●	–	–
VIB3	–	–	–	●	●	●	–	●	●	–
BIO2	–	–	–	●	●	–	●	●	–	●
FOOD2	–	–	–	●	●	–	●	●	–	●

1) Other containers are available by agreement.



Arcanol rolling bearing greases

Arcanol greases

The chemical/physical characteristics of the greases, their principal characteristics and application examples are shown in the table. Ordering examples for the greases are listed below.

Arcanol rolling bearing greases

Arcanol grease	Designation to DIN 51825	Classification
MULTI2	KP2K-30	Low-noise ball bearing grease for D ≦ 62 mm
MULTI3	K3K-20	Standard ball bearing/insert bearing grease for D > 62 mm
SPEED2,6	KPHC2/3K-40	Standard spindle bearing grease
MULTITOP	KPHC2N-40	Universal high performance grease
TEMP90	KP3P-40	Low-noise rolling bearing grease, up to 160 °C
TEMP110	KP2P-30	Universal grease for higher temperatures
TEMP120	KPHC2R-30	Grease for high temperatures and high loads
TEMP200	KFKP2U-30	Rolling bearing grease for T > 150 °C to 260 °C
LOAD150	KP2N-20	Multi-purpose grease for automotive applications, high performance grease for line contact
LOAD220	KP2N-20	Heavy duty grease, wide speed range
LOAD400	KP2K-20	Grease for high loads, shocks
LOAD460	KP1K-30	Grease for high loads, vibrations, low temperatures
LOAD1000	KP2K-20	Grease for high loads, shocks, large bearings
FOOD2	KPHC2K-30	Grease with foodstuffs approval
VIB3	KP3N-30	Grease for oscillating motion
BIO2	KPE2N-40	Grease with rapid biodegradability
CLEAN-M	KX2R-30	Clean room grease, grease resistant to radiation
MOTION2	KPFHC2K-40	High performance grease paste for oscillating applications and plain bearing arrangements

Type of grease Thickener Base oil	Operating temperature range °C	Upper continuous limit temperature $T_{upperlimit}$ °C	NLGI grade	Speed parameter $n \cdot d_M$ $min^{-1} \cdot mm$	Kinematic viscosity	
					at 40 °C mm^2/s	at 100 °C mm^2/s
Lithium soap Mineral oil	–30 to +120	+75	2	500 000	110	11
Lithium soap Mineral oil	–20 to +120	+75	3	500 000	110	12
Lithium soap Synthetic oil	–40 to +120	+80	2 to 3	2 000 000	25	6
Lithium soap Partially synthetic oil	–40 to +140	+80	2	800 000	82	12,5
Polycarbamide Partially synthetic oil	–40 to +160	+90	3	700 000	148	15,5
Lithium complex soap Partially synthetic oil	–30 to +160	+110	2	500 000	130	14,2
Polycarbamide Synthetic oil	–30 to +180	+120	2	300 000	400	40
PTFE Perfluoropolyether oil	–30 to +260	+200	2	300 000	550	49
Lithium complex soap Mineral oil	–20 to +140	+95	2	500 000	160	15,5
Lithium/calcium soap Mineral oil	–20 to +140	+80	2	500 000	245	20
Lithium/calcium soap Mineral oil	–20 to +120	+80	2	400 000	400	27
Lithium/calcium soap Mineral oil	–30 to +130	+80	1	400 000	400	25
Lithium/calcium soap Mineral oil	–20 to +130	+80	2	300 000	1 000	38
Aluminium complex soap White oil	–30 to +120	+70	2	400 000	150	18
Lithium complex soap Mineral oil	–30 to +150	+90	3	350 000	170	14
Lithium/calcium soap Synthetic oil	–40 to +150	+80	2	300 000	55	10
Polycarbamide Ether	–30 to +180	+90	2	850 000	103	12,8
Lithium soap Synthetic oil	–40 to +130	+75	2	500 000	50	8





Other products

Slewing rings
High precision bearings for combined loads
Thin section bearings
Needle roller bearings with ribs
Equipment and services
for the mounting and maintenance of rolling bearings

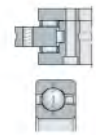



Slewing rings

Four point contact bearings
Crossed roller bearings

Slewing rings

		Page
Product overview	Slewing rings	1056
Features	Four point contact bearings	1057
	Crossed roller bearings	1057

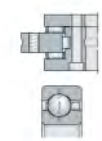

Four point contact bearings

Light series 20

VLA20

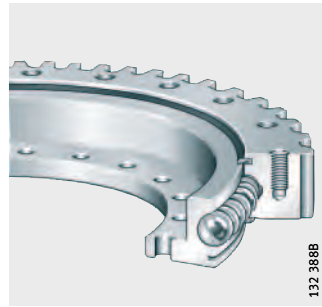

VLU20

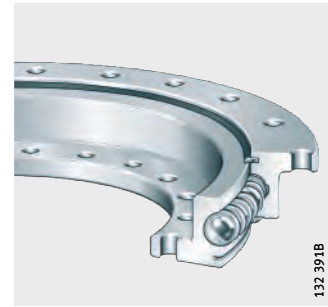

Standard series 20, 25

VSI20, VSI25

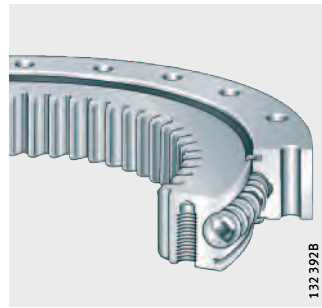

VSU20, VSU25

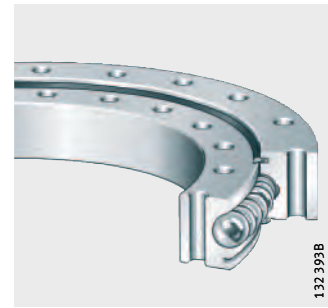

Crossed roller bearings

Standard series 14

XSA14

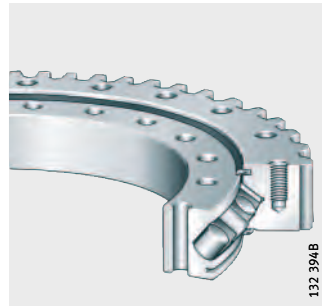

XSI14

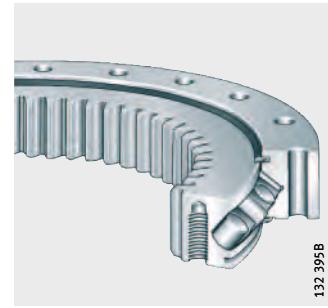

XSU14

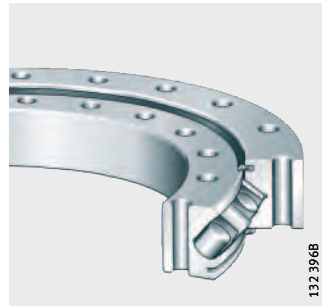

Slewing rings

Features

INA slewing rings are known worldwide as premium products in the field of rolling bearing technology.
These machine elements have proved themselves many times over; they have high load carrying capacity, a versatile range of applications and are highly cost-effective. Due to their design, a single bearing can reliably support radial, axial and tilting moment loads. It is therefore possible in many cases to replace bearing arrangements comprising a combination of radial and axial bearings by a single bearing. This reduces, in some cases considerably, the costs and work required in the design of the adjacent construction and the mounting of bearings.

Slewing rings are sealed on both sides, lubricated with a high quality grease, can be relubricated via lubrication nipples and give particularly easy mounting. The bearing rings are supplied without gear teeth or, in order to achieve simple drive solutions, are available with external or internal gear teeth.

INA slewing rings are designed as four point contact bearings and crossed roller bearings.

Four point contact bearings

Four point contact bearings are available with external teeth, internal teeth or without teeth as well as in the light series 20 and standard series 20 and 25.

These slewing rings without preload are robust and proven under very demanding operation; they place only slight demands on the flatness and perpendicularity of the adjacent construction.

They are suitable for applications with lower requirements for accuracy and rigidity of the bearing arrangement, for example in simple metalworking machines, wind power equipment and construction machinery.

Crossed roller bearings

Crossed roller bearings are available with external teeth, internal teeth and without teeth in the standard series 14 as well as the series XA, XI and XU.

These preloaded slewing rings can support higher loads than four point contact bearings. They have proved themselves particularly effective where bearings are subjected to high radial forces as well as to moderate axial and tilting moment loads.

They are suitable for applications with uniform running free from stick-slip, low rotational resistance and high requirements for axial and radial runout accuracy and rigidity, for example in robots, handling systems and machine tools.

Product catalogue

The standard range is described comprehensively in Catalogue 404 and the online version of ***medias***® *professional*.

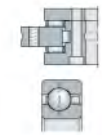

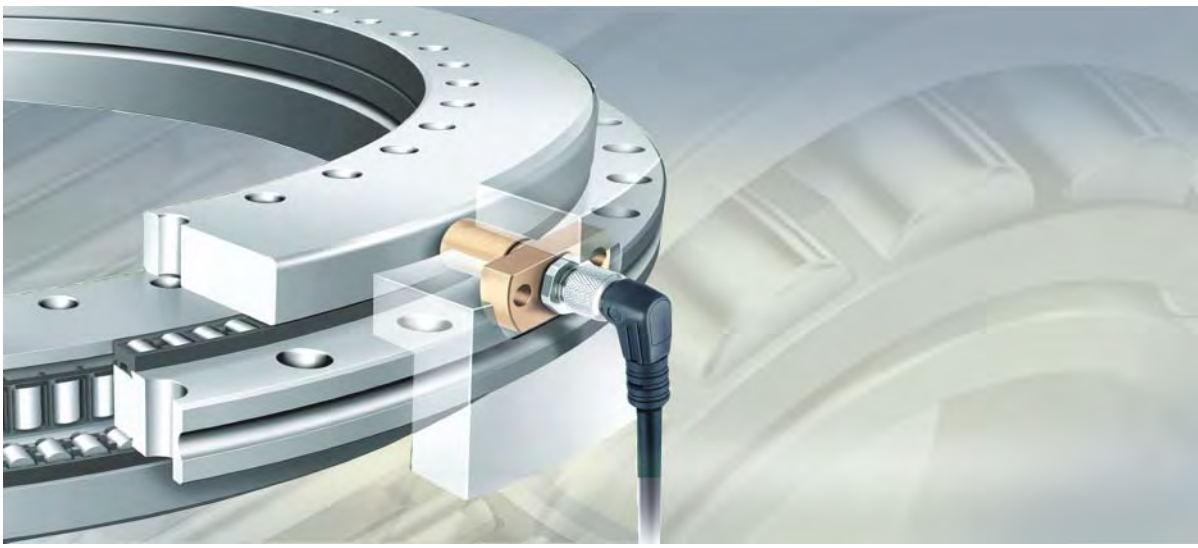

High precision bearings for combined loads

Axial/radial bearings
Axial angular contact ball bearings
Axial/radial bearings with integral angular measuring system

High precision bearings for combined loads

Page

Product overview

Axial/radial bearings, axial angular contact ball bearings, axial/radial bearings with integral angular measuring system 1060

Features

Areas of application 1062

Axial/radial bearings 1063

Axial angular contact ball bearings 1063

Axial/radial bearings with integral angular measuring system 1064

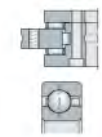

Axial/radial bearings

YRT



RTC

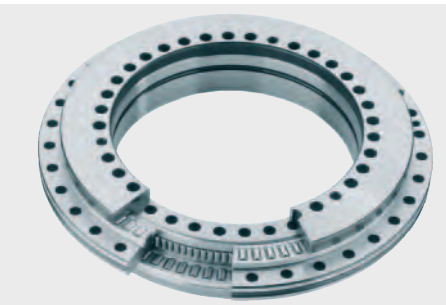

For higher speeds

YRT_{Speed}



Axial angular contact ball bearings

ZKLDF

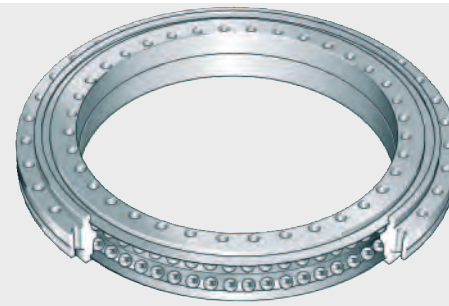

Axial/radial bearings with integral angular measuring system

With magnetic dimensional scale

YRTM, YRTSM



Electronic measuring system
Measuring heads with shims

SRM

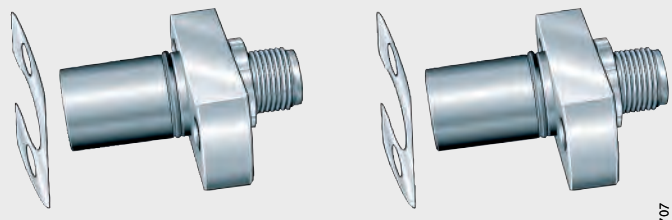

Electronic evaluation system

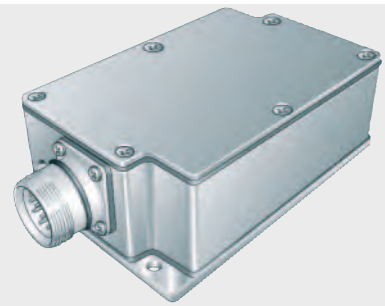

Connection cable
For measuring heads and electronic measuring system

SRMC

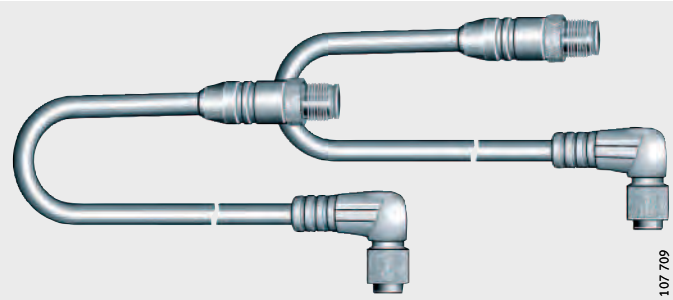

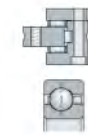

Features

Axial/radial bearings YRT, RTC and YRT_{Speed} as well as axial angular contact ball bearings ZKLDF are ready-to-fit high precision bearings for high precision applications with combined loads.
They can support radial loads, axial loads from both sides and tilting moments without clearance and are particularly suitable for bearing arrangements with high requirements for running accuracy, such as rotary tables, face plates, milling heads and reversible clamps.

Due to the fixing holes in the bearing rings, the units are very easy to mount.

The bearings are radially and axially preloaded after mounting.

The mounting dimensions of all series are identical.

Operating limits

For standard applications with low speeds and small operating durations, such as indexing tables and swivel type milling heads, the most suitable bearing is series YRT, *Figure 1* ④. These bearings are available in two axial and radial runout accuracies.

Where comparatively lower friction and higher speeds are required, bearings of series RTC can be used, *Figure 1* ③. For higher accuracy requirements, these bearings are also available with restricted axial runout accuracy.

For the bearing arrangements of direct drive axes, series YRTS is available. Due to their high limiting speeds and very low, uniform frictional torque across the whole speed range, these bearings are particularly suitable for combination with torque motors, *Figure 1* ②.

Axial angular contact ball bearings ZKLDF are particularly suitable for high speed applications with long operating duration, *Figure 1* ①. They are characterised by high tilting rigidity, low friction and low lubricant consumption.

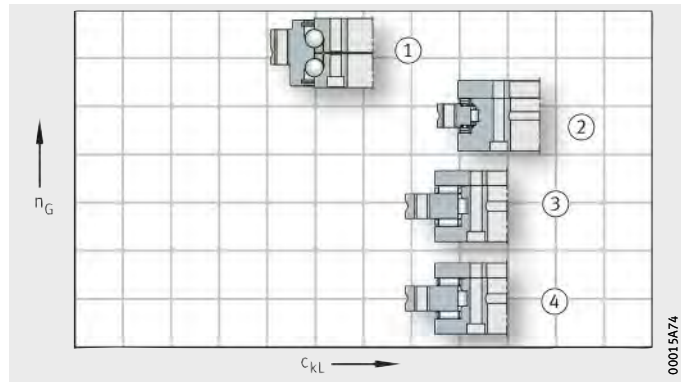

n_G = limiting speed
c_{kL} = tilting rigidity
① ZKLDF
② YRT_{Speed}
③ RTC
④ YRT

Figure 1
Speed and tilting rigidity

Axial/radial bearings

Axial/radial bearings YRT, RTC and YRT_{Speed} have an axial component and a radial component.

The axial component comprises an axial needle roller or cylindrical roller and cage assembly, an outer ring, L-section ring and shaft locating washer and is axially preloaded after mounting.
The radial component is a full complement (YRT, RTC) or cage guided, preloaded cylindrical roller set. The outer ring, L-section ring and shaft locating washer have fixing holes.

The unit is located by means of retaining screws for transport and safe handling.

Sealing

Axial/radial bearings are supplied without seals.

Lubrication

Bearings of series YRT and YRT_{Speed} are greased using a lithium complex soap grease to GA08 and can be lubricated via the outer ring and L-section ring.
Arcanol LOAD150 is suitable for relubrication.

Bearings of series RTC are greased with Arcanol MULTITOP.

Axial angular contact ball bearings

Axial angular contact ball bearings ZKLDF comprise a single-piece outer ring, a two-piece inner ring and two ball and cage assemblies with a contact angle of 60°. The outer ring and inner ring have fixing holes for screw mounting of the bearing on the adjacent construction.

The unit is located by means of retaining screws for transport and safe handling.

Sealing

Axial angular contact ball bearings have sealing shields on both sides.

Lubrication

The bearings are greased with a barium complex soap grease to DIN 51825-KPE2K-30 and can be lubricated via the outer ring.

Further information

Axial/radial bearings and axial angular contact ball bearings are described in detail in Catalogue HR 1, Rolling Bearings.

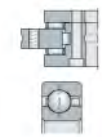

Axial/radial bearings with integral angular measuring system

Axial/radial bearings are also available with an angular measuring system. The measuring system can measure angles to an accuracy of a few angular seconds by non-contact, magneto-resistive means.

Axial/radial bearings with an integral angular measuring system comprise an axial/radial bearing YRTM or YRTSM with a dimensional scale, an SRM electronic measuring system and signal leads SRMC.

The electronic measuring system SRM comprises two measuring heads, two stacks of shims and an electronic evaluation system.

The signal leads for connecting the measuring heads to the electronic evaluation system can be ordered individually in various designs.

The electronic measuring system MEKO/U will continue to be available but should no longer be used for new designs.

Bearings of series YRTM or YRTSM correspond in mechanical terms to axial/radial bearings YRT or YRTS but are additionally fitted with a magnetic dimensional scale. The measuring system can measure angles to an accuracy of a few angular seconds by non-contact, magneto-resistive means.

For the mechanical part of axial/radial bearings YRTM or YRTSM, please refer to the information on page 1063.

Advantages of the angular measuring system

The measuring system, *Figure 2*:

- allows, due to the rigid connection to the adjacent construction, very good control characteristics (control stability and dynamics) and is therefore particularly suitable for axes with torque motor drive
- offers a high maximum measuring speed of up to 16,5 m/s
- operates by non-contact means and is therefore not subject to wear
- carries out measurement irrespective of tilting and position
- has automatically self-adjusting electronics
- has a self-centring function
- is unaffected by lubricants
- is easy to mount, the measuring heads are easily adjustable and there is no need for alignment of the bearing and a separate measuring system
- requires no additional parts
  - the dimensional scale and measuring heads are integrated in the bearing and adjacent construction respectively
  - the resulting space saved can be used for the machining area of the machine
- does not give any problems relating to supply lines, since these can be laid within the adjacent construction directly through the large bearing bore
- gives savings on components, overall design envelope and costs due to the compact, integrated design requiring fewer components.

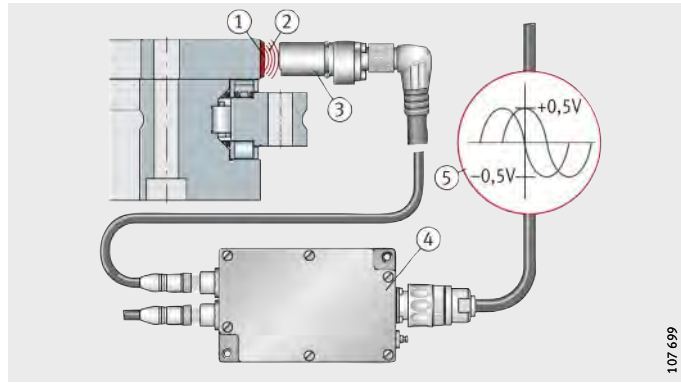

① Magnetic scale
② Magnetic field lines
③ Measuring head with magneto-resistive sensor
④ Electronic evaluation system
⑤ Analogue signals at output

Figure 2
Measurement principle

Further information

Comprehensive information on axial/radial bearings with an integral measuring system is given in TPI 120, High Precision Bearings for Combined Loads. This publication is available on request.

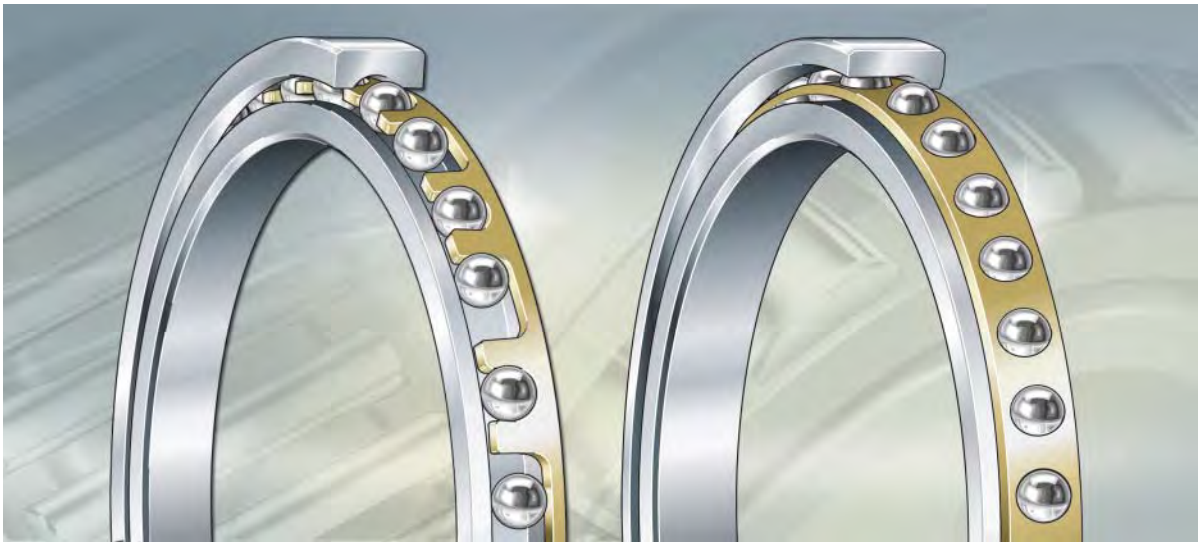

Thin section bearings

Thin section bearings

		Page
Product overview	Thin section bearings	1068
Features	Deep groove ball bearings, four point contact bearings, angular contact ball bearings	1069

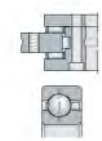

Deep groove ball bearings

Type C

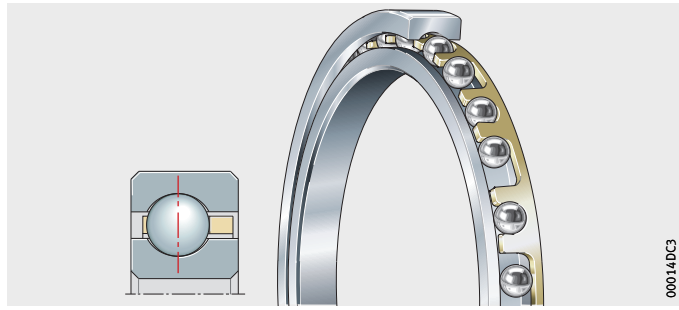

Four point contact bearings

Type X

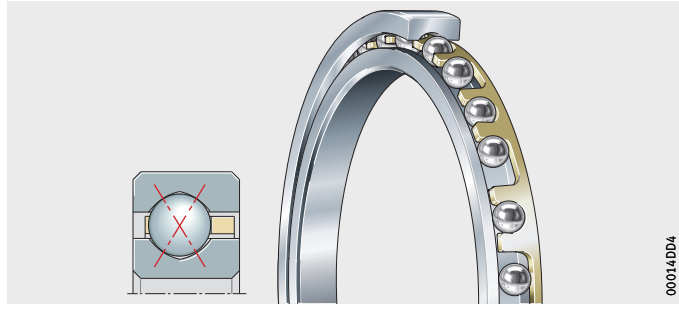

Angular contact ball bearings

Type E

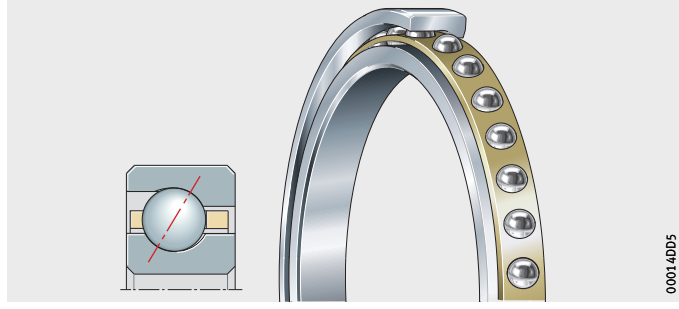

Thin section bearings

Features

Thin section bearings are high precision products with very little running noise and high load carrying capacity.
These bearings are available in three different designs with extremely small, predominantly square cross-sections.
Within each series, the cross-section remains constant even in the case of larger shaft and housing bore diameters. The bearings are therefore also described as Constant Section (CS) bearings.
This feature distinguishes thin section bearings from the conventional bearings that are described in standardised ISO series.

In this way, a larger cross-section can be selected in a graduated way and thus a bearing with high load carrying capacity can be used without the need to increase the shaft diameter.
Thin section bearings can thus be used to achieve extremely light and compact designs.

Deep groove ball bearings, four point contact bearings, angular contact ball bearings

Thin section bearings are available as deep groove ball bearings (C), four point contact bearings (X) and as angular contact ball bearings (E).
Each of these designs is available in various series.
The series correspond to the cross-section sizes.
The balls are matched to the series.

Deep groove ball bearings can support axial loads in both directions as well as radial loads; under axial load, a contact angle $\alpha > 0°$ is adopted.

Four point contact bearings can support axial loads in both directions as well as radial loads; they thus act as double row angular contact ball bearings.

Angular contact ball bearings can be filled with an optimised number of balls and have a contact angle of 30°.
They can support considerably higher radial loads than deep groove ball bearings or four point contact bearings and can support axial loads in one direction. For particular requirements, angular contact ball bearings are also available as matched pairs of bearings.
These combinations then have significantly higher rigidity and load carrying capacity than individual bearing solutions.

Thin section bearings are available in designs that are either open or sealed on both sides.
The seals are made from synthetic rubber (NBR) with a steel insert.

Sealed bearings are greased. For extreme operating conditions, special lubricants are available. Cages are made from brass or plastic.

In addition to the standard tolerance class PL1, classes PL3 and PL6 are also available (with increasingly tighter tolerances).

Product catalogue

The standard range is described comprehensively in Catalogue 575, Thin Section Bearings.

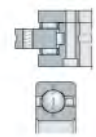

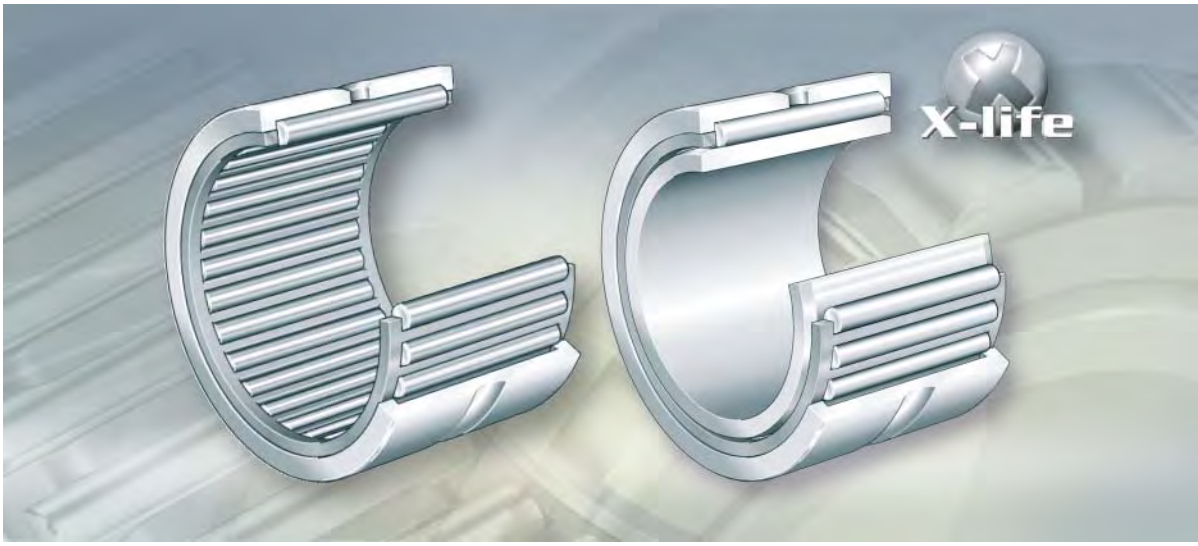

Needle roller bearings with ribs

Needle roller bearings without inner ring
Needle roller bearings with inner ring
Inner rings

Needle roller bearings with ribs

Page

Product overview

Needle roller bearings with ribs 1072

Features

X-life 1073

Needle roller bearings without inner ring 1073

Needle roller bearings with inner ring 1073

Inner rings 1073

Further information 1073

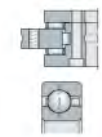

Needle roller bearings without inner ring

RNA48

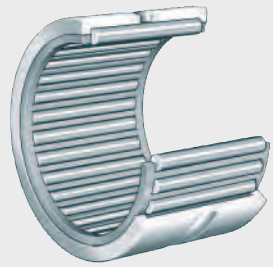

Needle roller bearings with inner ring

NA48



Inner rings

IR



Needle roller bearings with ribs

Features

Needle roller bearings with ribs are single or double row units comprising machined outer rings with ribs, needle roller and cage assemblies and removable inner rings.

X-life

Needle roller bearings with ribs are X-life bearings.
These bearings have optimised raceway surfaces.
This gives higher load carrying capacity and longer rating life.

Needle roller bearings without inner ring

Bearings without inner ring RNA48 have particularly compact radial dimensions. However, they require a shaft raceway that is hardened and ground.

The bearings are of a single row design.

Needle roller bearings with inner ring

Bearings with inner ring NA48 are used if the shaft is not configured as a rolling bearing raceway.

The bearings are of a single row design.

Inner rings

Inner rings IR are made from hardened rolling bearing steel and have precision machined raceways.

They are used where:

- the shaft cannot be used as a raceway for needle roller bearings
- needle roller bearings must be combined with wider inner rings in order to allow larger axial displacements of the shaft in relation to the housing
- optimum running surfaces are required for seal lips.

Further information

Needle roller bearings are described in detail in Catalogue HR 1, Rolling Bearings.

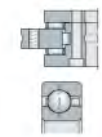



Mounting and maintenance

Mounting and maintenance

Our portfolio

	Page
Products and services	1076
Portfolio	1076
Industrial Aftermarket	1077
Mounting Toolbox – mounting made easy	1077
Mounting	1078
Mounting services	1078
Equipment rental	1079
Mechanical tools	1079
Thermal tools	1079
Hydraulic tools	1081
Lubrication	1083
Services	1083
Lubricants	1083
Lubrication devices	1084
Alignment	1085
Shaft alignment device FAG Top-Laser EQUILIGN	1085
Shims FAG Top-Laser SHIM	1086
Condition monitoring	1087
Continuous monitoring	1087
Regular monitoring	1088
Condition Monitoring with FAG SmartCheck	1089
Lubricant monitoring with FAG GreaseCheck	1090
Comprehensive monitoring	1091

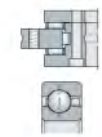

Our portfolio
Products and services

Within its industrial service concept, Schaeffler offers high quality products, services and training, *Figure 1*.

Portfolio

The portfolio comprises:

- mounting
- lubrication
- condition monitoring
- reconditioning.

The employees of Schaeffler worldwide will be pleased to help you select the ideal products, services and training courses, *Figure 1*.



Figure 1
Portfolio

Industrial Aftermarket

Schaeffler Industrial Aftermarket (IAM) is responsible for replacement parts and service business for end customers and sales partners in all significant industrial sectors. On the basis of innovative solutions, products and services relating to rolling bearings, the service function of Schaeffler Industrial Aftermarket offers a comprehensive portfolio that covers all phases in the lifecycle of the bearing and takes account of the total costs (TCO).

The aim is to help customers save on maintenance costs, optimise plant availability and avoid unforeseen machine downtime. Schaeffler Industrial Aftermarket offers each customer an individual concept solution.

Schaeffler has centres of competence all around the world. This means we can provide customers worldwide with products, services and training quickly and professionally. All service employees worldwide undergo a comprehensive training programme and are audited regularly by officially certified specialists. This ensures that services throughout the world conform to a uniformly high standard of quality.

Mounting Toolbox – Mounting made easy

The Schaeffler Mounting Toolbox brings together valuable knowledge relating to mounting and dismounting, *Figure 2*. In individual video sequences, the service experts present step by step the points that must be paid close attention for correct mounting, lubrication and alignment.

http://mounting-toolbox.schaeffler.com
Mobile website:
http://mtb.schaeffler.de/com



Figure 2
Mounting Toolbox

Mounting and maintenance

Mounting

The mounting personnel in the Industrial Service function are trained and skilled personnel who can provide reliable, rapid and competent assistance. The mounting services are provided either at your location or at Schaeffler.

Mounting services

The mounting services include, *Figure 3*:

- mounting and dismounting of bearing arrangement units
- acceptance inspection of mating parts for the rolling bearings (shafts and housings)
- measurement and production inspection of tapered shaft seats, together with provision of the necessary measuring equipment
- maintenance and inspection of bearing arrangements
- support in achieving optimum mounting operations
- the use of modern mounting tools, such as heating by means of versatile medium frequency technology
- the design and manufacture of special tools.



Figure 3
Mounting service on a converter

Advantages

The mounting services give the following advantages:

- extended bearing life
- considerable cost reductions
- less unplanned downtime
- increased plant availability
- correct use of bearings and housings.

Further information

- Enquiries:
  industrial-services@schaeffler.com,
  +49 2407 9149-66.

Equipment rental

Customers who require special mounting and dismounting tools or measuring equipment only infrequently can rent these from Schaeffler for a fee.

Schaeffler offers rental of the following equipment:

- hydraulic nuts
- hand pump sets
- heating devices using medium frequency technology
- large induction heating devices.

The devices are checked after each use by the Schaeffler experts and, where necessary, restored to full working order.

Further information

- Enquiries:
  industrial-services@schaeffler.com,
  +49 2407 9149-66.

Mechanical tools

Mechanical tools are designed for the mounting and dismounting of bearings.

Further information

- For detailed information, see Catalogue IS 1, Mounting and Maintenance of Rolling Bearings.

Thermal tools

Induction heating devices are used to heat rolling bearings or components with a cylindrical bore in mounting and dismounting. In addition to various induction heating devices operating with mains frequency technology, Schaeffler also offers induction heating devices with medium frequency technology. Adequate expansion of the bearings is normally achieved at +80 °C to +100 °C. During the heating operation, the maximum heating temperature must be observed. In the case of plain bearings, the temperature may not normally exceed +120 °C, in order to avoid damage to the seals. In all devices for heating, the temperature can be steplessly controlled.

Wear protective gloves during mounting and dismounting of heated parts.

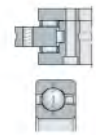

Induction units with medium frequency technology

FAG heating devices with medium frequency technology give rapid, simple heating of medium-sized to large bearings, housings and similar steel parts for mounting and dismounting. The device always comprises two parts: an inductor and a generator.

The inductor can be of a flexible or rigid design. The rigid design is particularly suitable for batch applications. The flexible design of inductor can be wound around the components.

Each device is designed for the specific application and is fitted, depending on the workpiece, with flexible or rigid inductors. Due to its compact construction, the device can also be used for mobile operation.



Figure 4
Heating device with medium frequency technology: generator and inductor

Advantages

The advantages of the heating device with medium frequency technology are as follows:

- suitable for mounting and dismounting
- operating frequency from 10 kHz to 25 kHz
- efficiency of the generator higher than 90%
- low energy requirements
- short heating times
- control of heating according to time and temperature
- automatic demagnetisation
- flexible and rigid inductors available
- suitable for use either inside or outside component
- lower mains connection power than heating devices with mains frequency
- almost silent
- air-cooled system.

Hydraulic tools

Hydraulic tools can be used to apply large forces. These tools are therefore particularly suitable for the mounting and dismounting of large bearings or components with a tapered bore.

Hydraulic nuts are used as a mounting tool. Pressure can be generated using oil injectors, hand pumps or hydraulic units.

Hydraulic nuts

Hydraulic nuts HYDNUT, see table, are used to press components with a tapered bore onto their tapered seat. Presses are mainly used if the drive-up forces required cannot be applied using other accessories, e.g. shaft nuts or pressure screws.

The main applications are as follows:

- mounting and dismounting of bearings with a tapered bore. These bearings with a tapered bore can be seated directly on a tapered shaft, an adapter sleeve or a withdrawal sleeve
- dismounting of withdrawal sleeves and adapter sleeves.

Available hydraulic nuts

Designation	Design	Application
HYDNUT50 to **HYDNUT200**	With metric fine pitch thread to DIN 13	Adapter and withdrawal sleeves
HYDNUT205 to **HYDNUT1180**	With trapezoidal thread to DIN 103	With metric dimensions
HYDNUT90-INCH to **HYDNUT530-INCH**	With inch size thread to ABMA “Standards for Mounting Accessories, Section 8, Locknut Series N-00”	Sleeves with inch dimensions
HYDNUT100-HEAVY to **HYDNUT900-HEAVY**	Increased capacity design with smooth bore	For high mounting forces, for example in shipbuilding

Further information

- For detailed information, see TPI 196, FAG Hydraulic Nuts
- Enquiries: industrial-services@schaeffler.com, +49 2407 9149-66.

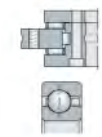

Pump for drive-up distance

The hand pump PUMP1000-4L-CONTROL is particularly suitable as a pressure generation device where bearings with a tapered bore are to be driven onto their tapered seat using a hydraulic nut, *Figure 5*.

First, the bearing is driven smoothly onto the tapered seat as far as the initial position. A suitable hydraulic nut is then screwed onto the shaft and the hand pump is connected. The hand pump is then operated until the pressure to reach the start position is achieved. The pump is then operated further to drive the bearing by the required drive-up distance and thus achieve the final position.

The user manual for the pump PUMP1000-4L-CONTROL contains a table that shows the number of strokes necessary to achieve the required drive-up distance of the bearing. The required drive-up distance is calculated using the software Mounting Manager.

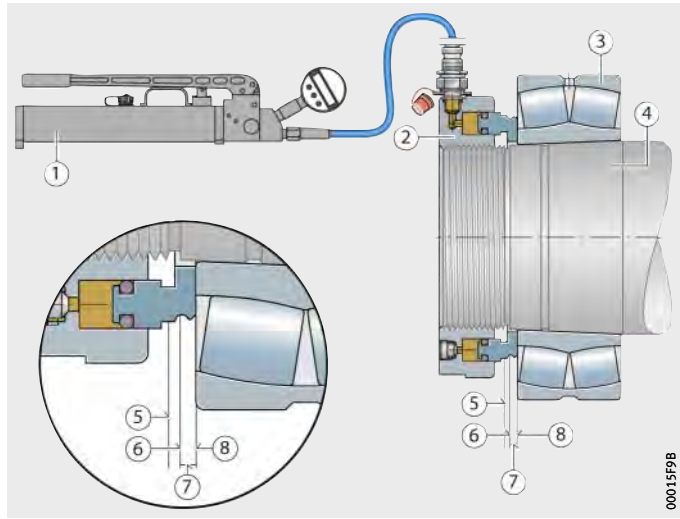

① Hand pump
② Hydraulic nut
③ Spherical roller bearing
④ Tapered seat
⑤ Initial position
⑥ Start position
⑦ Drive-up distance
⑧ Final position

Figure 5
Mounting
of a spherical roller bearing
using PUMP1000-4L-CONTROL

Scope of delivery

Hand pump with digital manometer
High pressure hose with coupling sleeve
Spacer ring (HYDNUT50 to HYDNUT150)
Push fit coupling nipple
User manual
Metal case.

Ordering designation

PUMP1000-4L-CONTROL

Lubrication

In more than half of all cases, inadequate lubrication is the cause of unplanned machine downtime. The life of machine elements undergoing swivel, rotary or linear motion can be significantly extended by the use of greases appropriate to the different operating and environmental conditions as well as the definition of and adherence to lubrication intervals and quantities.

Services

Services relating to lubrication include:

- selection of lubricants and lubrication systems
- the preparation of lubrication and maintenance plans
- lubrication point management
- consultancy on lubricants
- lubricant investigations and tests.

Advantages

The services help in:

- preventing failures
- increasing in productivity
- reducing lubrication costs.

Lubricants

The lubricants available from Schaeffler are designed and tested for bearing arrangement technology.

Arcanol rolling bearing greases

The 18 different greases cover almost all applications, see table, page 1050. They are developed by experienced application engineers and are produced by the best manufacturers in the market. Different greases are used depending on the particular application.

Rolling bearing greases under the name Arcanol are subjected to 100% quality inspection. The inspection methods at Schaeffler are among the most demanding in the market. As a result, Arcanol rolling bearing greases fulfil the highest quality requirements.



Figure 6
Analysis
of the thermal behaviour of greases

Lubrication devices

Lubricators and lubrication systems automatically provide bearings with the correct quantity of lubricant. This prevents failure due to inadequate or incorrect lubrication. Approximately 90% of bearings are lubricated with grease. Relubrication with the correct quantity of grease at the appropriate intervals gives a significant increase in the life of bearings.

Lubrication systems

A single-point or multi-point lubrication system can supply lubrication points precisely and irrespective of temperature. The dispensing times can be set variably.

Lubrication system CONCEPT8

This single-point and multi-point lubrication system can grease up to eight lubrication points, *Figure 7*. Suitable grease cartridges (LC units) are available in the size 800 cm^3. The lubrication system controls the greasing of the lubrication points independently of the machine.



Figure 7
FAG CONCEPT8

Advantages

The advantages of the lubrication system are as follows:

- suitable for oil and grease up to NLGI 3
- reliable piston pump as delivery pump
- operating temperature from –20 °C to +70 °C
- low operating voltage of DCV 24
- pressure buildup to max. 70 bar, thereby overcoming any obstructions.

Further information

- For detailed information, see WL 80 382, FAG CONCEPT8 and Catalogue IS 1, Mounting and Maintenance of Rolling Bearings
- Enquiries:
  industrial-services@schaeffler.com,
  +49 2407 9149-66.

Alignment

Alignment is worth performing and gives savings in resources. Precise alignment ensures lower operating and maintenance costs in the long term. In addition, wear is reduced, the lifetime of machinery is increased and energy costs are cut.

Shaft alignment device FAG Top-Laser EQUILIGN

The FAG Top-Laser EQUILIGN is an alignment system for coupled and decoupled shafts in motors, pumps, ventilators and gearboxes with rolling bearings, *Figure 8*.

Advantages

The alignment system has the following advantages:

- simple mounting
- error-free handling even by untrained personnel using step-by-step display on the manual control device
- automatic tolerance checking.
  A symbol indicates when the shafts are correctly aligned
- more precise alignment than with conventional methods
- rapid, simple measurement by means of Active Clock measurement mode
- robust control device.
  Watertight and insensitive to contamination in accordance with IP65
- user interface in 19 languages
- easy generation of reports
- real time display of displacement in all axes.

Caution ⚠ Do not look into the laser beam or point the laser beam into another person's eyes.



Figure 8
Shaft alignment device FAG Top-Laser EQUILIGN

Shims
FAG Top-Laser SHIM

Shims FAG Top-Laser SHIM are used to eliminate vertical misalignment or soft feet.

These shims are made from corrosion-resistant alloy steel and are available in seven thicknesses (0,05 mm, 0,1 mm, 0,2 mm, 0,5 mm, 0,7 mm, 1 mm, 2 mm) and in four sizes (dimension c = 15 mm, 23 mm, 32 mm, 44 mm), *Figure 9*.

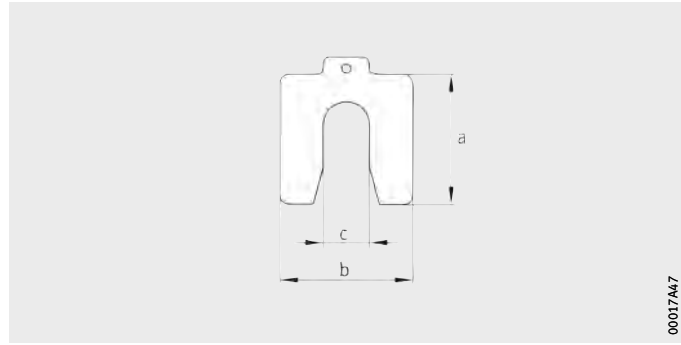

Figure 9
Shim, dimensions

Condition monitoring

The malfunction-free and optimised operation of complex machinery and plant can normally only be achieved by means of condition-based maintenance. By preference, Schaeffler uses vibration diagnosis for this task.

This method makes it possible to detect damage in machinery at a very early stage. This means that, for example, damaged components can be replaced as part of planned downtime. Unscheduled downtime is avoided.

Depending on the type of machine and its importance for the production process, condition monitoring can be carried out by means of either continuous (online) monitoring or regular (offline) monitoring.

Continuous monitoring

For production-critical machinery, continuous monitoring by means of vibration diagnosis is indispensable in many cases, *Figure 10*.

In addition to giving advice on selecting the right system, Schaeffler also implements monitoring of the machine. This includes not only hardware selection but also system configuration and, where necessary, its integration into existing systems.

The customer can decide whether to carry out plant monitoring himself or to enlist the services of Schaeffler for online monitoring. Due to the communication options of the monitoring systems, remote analysis can be carried out by the Schaeffler experts.



Figure 10
Continuous monitoring

Regular monitoring

The failure of so-called “B” or “C” category plant items does not lead directly to downtime and does not therefore necessarily entail expensive secondary damage. In the case of such machine parts, regular monitoring is generally recommended as a more economical option.

In this type of monitoring, machinery is examined and assessed by vibration analysis at regular intervals, for example every four weeks. This regularity gives more in-depth knowledge of the normal condition of the machine. Deviations can thus be detected.
For the monitoring concept, the selection of measurement points and monitoring accessories as well as the measurement interval play a decisive role.

If deviations occur during measurement or if trends are to be investigated, the data can be sent to the Schaeffler Diagnosis Centre. Vibration experts will then analyse the data and prepare a diagnosis report. Through working with the Schaeffler experts, customers can build up their own know-how in analysis.

If no personnel are available for data logging, Schaeffler can also offer support in data logging. Its experts can carry out regular measurements on site.

Troubleshooting

Where malfunctions occur on a machine, defects must be detected and rectified very quickly. Based on many years of experience with different sectors and applications, the Schaeffler diagnosis experts are well versed in such troubleshooting tasks.

Problems or malfunctions in machine operation often become apparent through changes in vibration behaviour, unusual temperature patterns or similar phenomena. The investigation is closed out by a handover discussion between the diagnosis experts and all relevant employees on site. In addition to the results of the investigation, the recommended countermeasures are discussed in particular.

Further information

- Enquiries:
  industrial-services@schaeffler.com,
  +49 2407 9149-66.

Condition monitoring with FAG SmartCheck

For condition-based maintenance, Schaeffler uses vibration diagnosis as a preferred method. FAG SmartCheck is an innovative, economical measuring system for real time monitoring, *Figure 11*.

FAG SmartCheck is suitable, for example, for early detection of rolling bearing damage, imbalances and misalignments on:

- electric and geared motors
- vacuum and fluid pumps
- ventilators and fans
- gearboxes and compressors
- spindles and machine tools
- separators and decanters.

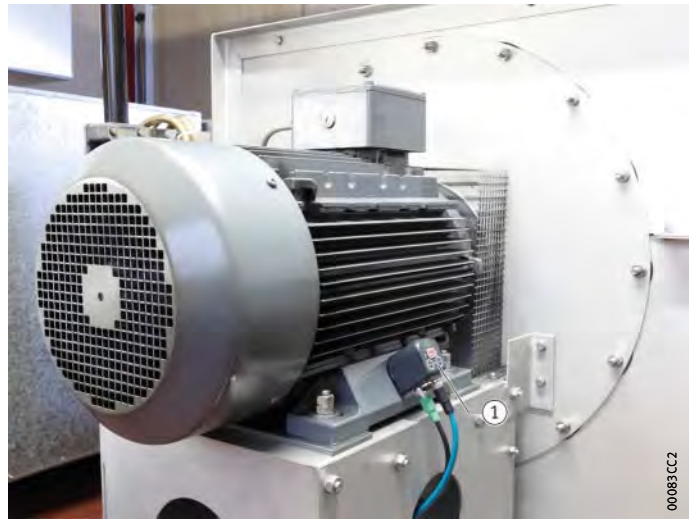

① Positioning of FAG SmartCheck

Figure 11
FAG SmartCheck on an electric motor

Commissioning is simplified since the device is supplied already loaded with a characteristic value set and predefined configuration templates. These can easily be matched to individual requirements.

Advantages

Further advantages include:
- reduction in life cycle costs
- compact design
- simple, rapid installation
- reliable real time monitoring of the machine
- intelligent process monitoring
- intuitive user concept
- simple integration in the controller and control facility
- modular accessories FAG SmartLamp, FAG SmartConnectBox and FAG SmartController
- complete service from a single source.

Lubricant monitoring with FAG GreaseCheck

The monitoring of grease condition in ongoing operation can be achieved, for example, using FAG GreaseCheck. Due to its special electronic evaluation system, relubrication is no longer carried out as a function of time but as a function of condition. In this way, relubrication can be carried out at the correct time, making it possible to delay and in many cases completely prevent rolling bearing damage.



① Optical probe
② Electronic evaluation system

Figure 12
Grease sensor FAG GreaseCheck

Advantages

FAG GreaseCheck makes it possible to achieve:
- lubrication matched to requirements
- increased plant availability
- optimised grease quantities and relubrication intervals
- lower lubricant costs
- lower service and maintenance costs.

Comprehensive monitoring

An innovative system for comprehensive monitoring combines grease and vibration diagnosis with a lubricator that is controlled by the monitoring devices. In this way, any critical change during ongoing operation can be detected and rectified before damage occurs in the rolling bearing. In particular, plant that is difficult to access or failure-critical can be comprehensively monitored and always provided with a optimum supply of grease, without the need for skilled personnel to be present on site, *Figure 13*.

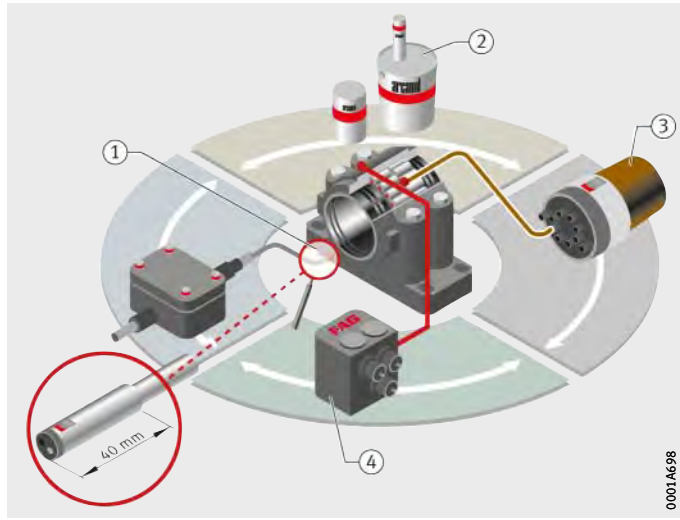

① FAG GreaseCheck
② Arcanol greases
③ FAG CONCEPT8
④ FAG SmartCheck

Figure 13
Comprehensive monitoring of rolling bearings



Market sectors

Production machinery
Power transmission
Railway engineering
Wind turbines
Heavy industry
Energy
Consumer products

Market sectors

		Page
Production machinery	Bearings for machine tools	1094
	Bearings for printing machinery	1095
	Bearings for textile machinery	1097
	Bearings for the food and packaging industry	1099
	Bearings for woodworking machinery	1099
Power transmission	Bearings for power transmission	1100
	Bearing arrangements in construction machinery	1101
	Bearing arrangements in industrial trucks	1101
	Bearing arrangements and components in the fluid technology sector	1102
Railway engineering	Bearings for rail vehicles	1104
Wind turbines	Bearing arrangements in wind turbines	1106
Heavy industry	Bearing arrangements for the steel industry	1107
	Bearing arrangements for the paper industry	1110
	Bearing arrangements in deep and surface mining	1113
	Bearings for materials processing	1116
	Bearing arrangements in the air handling sector	1119
Energy	Bearing arrangements in drilling and conveying plant	1121
	Bearing arrangements in power stations	1122
Consumer products	Bearings for consumer products	1124



Market sectors

Schaeffler develops, manufactures and supplies ball bearings, roller bearings, bearing units, housings and accessories worldwide for almost all machinery, plant, vehicles and equipment. We also provide a comprehensive range of services for advice, maintenance and mounting.

Our customers are found in the areas of production machinery, power transmission, railway engineering, wind turbines, heavy industry and consumer products.

Production machinery

High performance production machinery is a precondition for, and a driving force of, technical progress.

High precision bearings set standards both in their main application sector in machine tools and also in equipment for the textile industry, in printing machinery, woodworking machinery and machines for the food industry. They fulfil very high requirements for reliability, high running accuracy and high speeds. Comprehensive information is given in Catalogue SP 1, Super Precision Bearings.

Bearings for machine tools

Hybrid spindle bearings with steel rings and ceramic balls are finding increasing usage due to their particular speed capacity, robust characteristics and reliability as well as their significantly longer operating life. For very high requirements in terms of load carrying capacity and speed capacity, special X-life ultra bearings with rings made from high performance steel and balls made from ceramic have been developed.

Single and double row cylindrical roller bearings of high precision design are ideal for use as non-locating bearings, since they allow length compensation without constraining forces between the rollers and raceways. They give bearing arrangements with high radial rigidity, high load carrying capacity and high accuracy.

Double direction axial angular contact ball bearings of series 2344 and 2347 are used as particularly rigid axial bearings when cylindrical roller bearings of series N10 and NN30 support the radial forces.

Bearings for printing machinery

Printing machinery bearings are used in the bearing arrangements of the main cylinders in sheetfed and webfed printing machines, *Figure 1*, page 1096.
Due to their load carrying capacity, rigidity, accuracy and precise adjustability, they provide excellent support for the central requirement in printing machinery, namely the highest possible print quality.

The bearings are specially designed for each application in close partnership between printing machinery manufacturers and our Application Engineering functions. As a result, the customer only receives bearings that are precisely matched to his requirements. This matching of design to the specific machine concept is particularly important, since exceeding requirements is a drain on resources and failing to meet requirements impairs performance. Finding the optimum solution, however, is not always easy.
Due to its considerable experience in the development, design and manufacture of bearings, Schaeffler has the know-how necessary to always offer the best solution for an application in this complex bearing sector. Furthermore, it is able to do so in both technical and economic terms.



Market sectors

Due to the wide range of requirements, standardisation of printing machinery is only possible to a limited extent.
The range therefore comprises a large number of types and sizes.

In addition to the classic multi-row, high precision cylindrical roller bearings NN, NNU, N4N, N4U, use is also made of non-locating bearing units with and without eccentric geometries, locating bearing units, polygon bearings, linear bearing units, rotary bearing units and tapered roller bearing units. The bearings are available with and without seals. The bearing seat for the cylindrical stud can be of a cylindrical or tapered design.

Printing machinery bearings are cost-effective bearing arrangement systems that can be used to achieve the demands of the print industry for high productivity, low maintenance costs and excellent print quality.



Figure 1
Printing machine bearing unit with eccentric outer ring as non-locating bearing

Special publications

TPI 222
Publication PDM

High Precision Bearings for Printing Machinery
Bearing Solutions for Printing Machinery.

Bearings for textile machinery

Whether it is spinning or weaving, finishing or processing, modern textile machines are highly automated and must run with high material throughput and without malfunctions, right around the clock. There is no question that the right bearing components play a crucial role here. In this context, “right” means low friction, high accuracy, clearance-free, easy to mount, low maintenance, long service life, low noise and reliable.

In order to fulfil these requirements, Schaeffler has a comprehensive range of precision products for the reliable and cost-effective support of rotary and linear motion in textile machinery. We also have a range of system components that are precisely matched as complete systems to the specific application. Behind every one of these solutions lies years of experience in product development and the design of bearing arrangements.

Tape tension pulleys for gripper drives in weaving machines are renowned for their long life, *Figure 2*. These pulleys can be easily lubricated and have a very low moment of inertia. As a result, they run up to operating speed very quickly. In addition, the pulleys carry out up to 600 alternating rotary movements per minute in continuous operation with low energy consumption. This gives a considerable increase in the productivity and cost-efficiency of the machine while achieving a uniformly high fabric quality.



Figure 2
Energy-saving tape tension pulley for the gripper drive

We also have ready-to-fit tension pulleys with reduced running noise, *Figure 3*. Due to design measures, for example, the imbalance of these components has been reduced by 50%. As a result, it is no longer necessary to balance the pulleys separately.

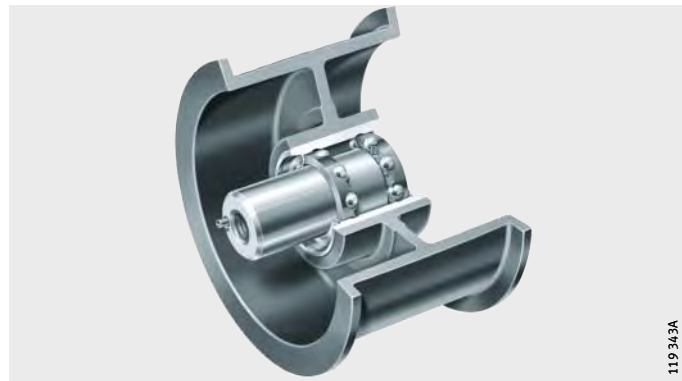

Figure 3
Tape tension pulley
with optimised noise characteristics
for twisting machines

Such ready-to-fit units are used in single and multi-head knitting machines and are simply screw mounted on the adjacent construction.
This eliminates the matching of individual components to each other and reduces errors involved in mounting. This solution also gives a simplified adjacent construction since the gearbox that was previously required can be completely eliminated.

The system comprises a lever, eccentric, connecting rod and the corresponding bearing units. The assembly converts the rotary motion of the drive shaft into the stroke motion for the knitting operation. Due to the smooth, high accuracy running of the bearings, the unit can achieve more than 1 000 strokes per minute. Highly effective seals ensure long life and low maintenance requirements.

Special publications Publication TMB Rolling Bearings for Textile Machinery.

Bearings for the food and packaging industry

Food production must proceed economically and with high efficiency. In general, the processes run fully automatically and often take place under extreme operating conditions. This requires a high degree of security and reliability. High quality machine components designed for continuous performance are an indispensable element here.

Our contribution in this field:

robust bearings with anti-corrosion protection, effective sealing and in many cases lubricated for life, for reliable round-the-clock operation.

Modern materials and surface coatings, which we work to improve by ongoing development, give our bearing arrangements the necessary advantages in rating life, *Figure 4*.



Figure 4
Open and sealed deep groove ball bearings

In the case of insert bearings, track rollers, slewing rings or the entire range of linear motion products, catalogue products or specifically designed units, the focus of our development efforts on all these products is the benefit to the customer: reducing the presence of interfaces by functional integration, compact construction, freedom from maintenance, reliable operating life, effective matching of components and subsystems to each other.

Special publications

Publication PVP — Bearing Arrangements In Food and Packaging Machinery.

Bearings for woodworking machinery

In many cases, deep groove ball bearings are adequate for the high speeds and relatively low loads in bearing arrangements for wood shapers. Very high speeds, however, normally require the use of spindle bearings.



Market sectors

Power transmission

Motors and transmissions must operate with increasing efficiency. In power transmission and construction machinery engineering as well as in industrial conveying trucks, high demands are placed on the quality and rating life of rolling bearings.

Bearings for power transmission

Modern gearboxes transmit high power levels within a small space. This requires careful selection of rolling bearings with high performance capacity. In addition to load carrying capacity, reliable and cost-effective bearing arrangements also require appropriate design of the adjacent parts, lubrication and sealing. In order to take account of these influences, it is particularly advantageous to use the expanded life calculation method.

Depending on the gearbox design and tooth set type, almost all types of rolling bearings are used in power transmission.

The input shafts of cylindrical gear units are often supported by spherical roller bearings or tapered roller bearings, *Figure 5*. For particularly high speeds, combinations of cylindrical roller bearings supporting radial loads and four point contact bearings under axial load are suitable. For intermediate and output shafts, spherical roller bearings in a floating arrangement are often selected.

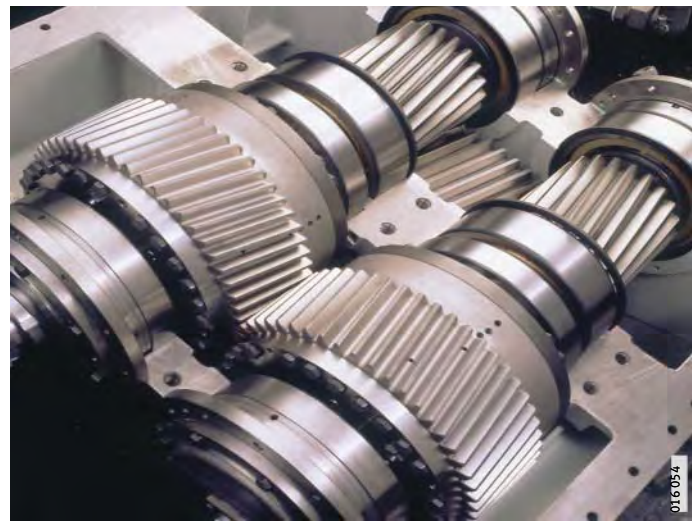

Figure 5
Rolling bearings in a cylindrical gear unit

Special publications

PKI Expertise for Bearing Arrangements in Industrial Gearboxes.

In bevel gear pairs, a narrow axial guidance is often required in order to ensure tooth mesh. A solution here is to use axially adjusted or matched tapered roller bearings or angular contact ball bearings.

The high axial forces in the worm shaft of worm gear units can be transmitted using matched or adjusted tapered roller bearings or angular contact ball bearings. For worm gear shafts, adjustability and narrow axial guidance of the tooth set are required. Deep groove ball bearings or adjusted tapered roller bearings are often used.

In order to support planet gears in planetary gearboxes, single or multiple row cylindrical roller bearings are used, with spherical roller bearings being mounted in special cases. Thicker planet gear studs can be achieved with direct bearing arrangements. The rolling elements then run directly on the planet gear stud. The hardness curve and surface quality of the raceway must be produced to particular specifications in order to ensure the load carrying capacity and operating life of the planet gear bearing arrangement.

Bearing arrangements in construction machinery

Among the wide range of rolling bearing arrangements in construction machinery, the exciter shaft bearing arrangement in vibratory equipment deserves particular mention.

Road rollers, plate compactors, vibratory motors, vibratory piledrivers or vibrator frames work with mechanical vibrations. The exciter shafts and their eccentrically mounted weights run at high speeds. Deep groove ball bearings (for small vibratory equipment), spherical roller bearings and cylindrical roller bearings of the designs N and NU have proved successful here.
In order to compensate for misalignments and shaft deflections, the rollers and inner ring raceways of the cylindrical roller bearings have a logarithmic transverse profile. This allows tilting of up to 4 angular minutes without impairing the rating life. For greater tilting, the transverse profile can be adapted.

Special publications

PLB Expertise for Bearing Arrangements in Construction Machinery.

Bearing arrangements in industrial trucks

Examples of special bearing designs can be found in fork lift trucks. Sensor bearings combine proven rolling bearing technology and modern sensor technology for drive, control and monitoring. This ready-to-fit system solution offers numerous cost and performance advantages.



Bearing arrangements and components in the fluid technology sector

Bearing arrangements and components for hydraulic drives and fluid pumps are subject to high requirements for functional security and cost-efficiency. These requirements are fulfilled predominantly using customer-specific developments but also in some cases with highly developed standard bearings and components.

High torque motors are used, for example, in industry, in agricultural equipment, rolling mills, paper machinery and conveying equipment. They generate extremely high torques at low speeds. A decisive contribution to low starting friction, jolt-free and reliable operation is made by special cylindrical roller bearings and further components such as high precision locknuts. In addition to bearings with coated rolling elements, inner rings machined free from spiral marks are used to provide an optimum sliding surface for sealing rings.

In construction machinery, hydraulic power is an indispensable source of energy for earthmoving and transport. Hydraulic cylinders with maintenance-free spherical plain bearings from INA have sliding areas with ELGOGLIDE® coating. The dry plain bearings with low friction and high load carrying capacity are suitable for oscillating motion under high load. The bearings require very little space and are particularly environmentally-friendly. In axial piston pumps of a swash plate design, axial roller bearings support the high forces of the pistons acting in the direction of stroke.
The high imbalance forces and radial forces are supported by double row cylindrical roller bearings with optimised speed characteristics. Swash plate pumps with an adjustable cradle are used to allow precise control of excavators or road making machinery.
Full complement or nearly full complement cylindrical roller bearings allow precise adjustment of the volume flow, even at high pressures.

Gear pumps convey coolants, transport foodstuffs and keep hydraulic systems moving. Plain bearings or high quality needle roller bearings ensure that gears move with practically no losses. In most cases, the medium being conveyed is also used as the lubricant for the bearings. If fluids with poor lubrication ability are to be conveyed, plain bearings are increasingly replaced by needle roller bearings. In this way, higher speeds and a longer operating life of the gear pumps can be achieved.

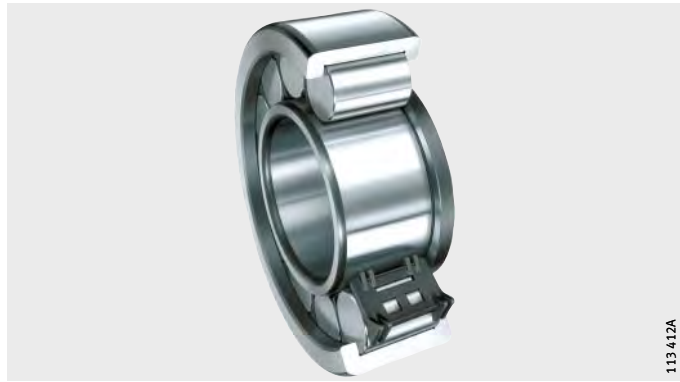

Figure 6
Cylindrical roller bearings with spacers for low friction

Hydrostatic gearboxes give stepless transmission of the drive force in tractors, ride-on lawnmowers and similar machines. Their reliable function is ensured by means of rolling and plain bearings as well as INA precision components such as hollow pistons, valves and fine blanked parts.

Fluid pumps facilitate the supply of water for the purposes of drinking, extinguishing, heating and cooling, the conveying of aggressive or abrasive media and the disposal of, for example, contaminated and waste water.
Economical plain and rolling bearings ensure smooth running over the long term. Depending on the speed and load, ball bearings, cylindrical roller or spherical roller bearings or plain bearings are mounted, *Figure 6*. Rolling and plain bearings help to ensure that valves and shut-off systems function reliably after long periods of stoppage.

In various types of pumps, very high requirements are fulfilled using X-life bearings.

Special publications

Publication PHP	Bearing Supports and Components for Hydraulic Drives and Pumps
Publication PFS	Fine Blanking and Systems Engineering
TPI 16	Steel Sealing Rings DRG
TPI 92	Axial Swash Plate Ball Bearings
TPI 128	Sealing Rings
Catalogue HG1	Plain Bearings.



Railway engineering

People and goods are being moved with increasing speed and over increasing distances from one place to another.

Bearings for rail vehicles

In mainline and local trains, the dominant requirements are for higher speeds and smoother running.
Bearings and housings for wheelsets, transmissions and traction motors are selected by the Application Engineering specialists so that they are ideally matched to the customer requirements, *Figure 7*.

Wheelset bearings are subjected to extreme loads and must fulfil very high safety requirements.

For wheelsets, cylindrical roller bearings with smooth running, low friction and high speed suitability are frequently used in specially developed wheelset bearing housings.

Wheelset bearings with spherical roller bearings are available for rigid housings connected to the vehicle or bogie.

Tapered roller bearing units TAROL are suitable for high running speeds and high axial loads. The ready-to-fit units can be mounted in a single operation, are sealed, lubricated and have a specially adjusted axial internal clearance. They are supplied in metric sizes (UIC range) or to the AAR specification in inch sizes.

Increasingly, wheelset bearing units with integrated sensors (for speed, temperature, direction of rotation etc.) are being used.



Figure 7
Tapered roller bearing unit for passenger train carriages

In hydrodynamic and mechanical railway transmissions with oil lubrication, radial bearings of practically all types are used to guide the pinion shafts, intermediate shafts and ring gear shafts.

In the axle suspension drive, which is normally lubricated by grease, cylindrical roller bearings, tapered roller bearings or spherical roller bearings are used.

For large gear bearing arrangements (gear hub), tapered roller bearings in an O arrangement matched by means of intermediate rings are predominantly used.

In the bearing positions of the traction motors, cylindrical roller bearings and deep groove ball bearings have proved successful.

For rail vehicles, there are also support and guide rollers, bearings in ancillary equipment, wheelset bearings with adapters, current-insulated deep groove ball bearings and cylindrical roller bearings to DIN/ISO dimensions, special Arcanol rolling bearing greases and mounting tools.

Special publications

TPI 155	Tapered Roller Bearing Units TAROL– Products and Services
TPI 156	Tapered Roller Bearing Units TAROL– Mounting, Maintenance, Repair
TPI 158	Products for Railway Applications
TPI 184	Suspension Tube Roller Bearings for Rail Vehicles
Publication PBS	Expertise in Bearing Technology and Service for Rail Vehicles.



Wind turbines

Wind turbines can now generate power levels of more than 3 MW.

Bearing arrangements in wind turbines

The bearings must be able to support moderate to high loads, oscillation and vibration.
Low friction standard rolling bearings are normally suitable here.
The bearings are mounted in standard or special housings.
For particular cases, special rolling bearings can also be used.

Rolling bearings for wind turbines must in many cases fulfil high quality requirements involving the presentation of appropriate evidence (German Lloyd certification guidelines).

The rotor bearing arrangement can be in the form of a shaft or hub bearing arrangement, *Figure 8*. Locating/non-locating bearing arrangements with spherical, cylindrical or tapered roller bearings have proved successful.

In the hub bearing arrangement, two tapered roller bearings are adjusted against each other. An alternative solution comprises a matched pair of tapered roller bearings as a locating bearing and a cylindrical roller bearing as a non-locating bearing.

For single bearing designs, support of forces and moments is combined in a multiple-row rolling bearing.



Figure 8
Self-aligning
FAG spherical roller bearings
for rotor bearing arrangement

Small swivel movements in the adjustment of the rotor blade as well as high loads and tilting moments are normally supported by four point contact bearings.

As tower bearings, four point contact bearings support the large masses and wind forces.

In wind turbine gearboxes, all types of rolling bearings normally found in gearbox construction are used.

Special publications

WL 01206	Expertise in Bearing Technology and Service for Wind Energy Installations.

Heavy industry

The difficult operating and environmental conditions in all areas of heavy industry require rolling bearings that are proven even in critical applications. This applies to mining, materials processing, the steel industry, the paper industry and the air handling sector.

Bearing arrangements for the steel industry

The bearing arrangements in steelworks and rolling mills are generally subjected to very high loads and in many cases also to high temperatures and contamination. In addition to standard rolling bearings, bearings specially designed for these conditions are required.

The rolling bearings for converters must support not only large masses but also severe shocks. Large spherical roller bearings of split or unsplit design fulfil these requirements.

Axial spherical roller bearings or slewing rings are used as the main bearings in the turrets of continuous casting plant to support the masses and the tilting moment. The swivel arms are supported in radial spherical plain bearings.

At the inner support point of driven guide rollers, split roller bearings are used. In order to protect the bearings from the high slab temperatures as well as scale and coolant water, the housings are cooled using water.
The seals comprise lamellar sealing rings and labyrinth seals.
For the support of non-driven guide rollers and the outer support of driven guide rollers, unsplit bearings are used.

Sealed spherical roller bearings reduce the grease consumption and thus the environmental impact, *Figure 9*.



Figure 9
Sealed spherical roller bearing for strand guide rollers

In order to support the high radial forces in rolling mills, cylindrical roller bearings with two or four rows are often selected, together with axial bearings in the form of deep groove ball bearings, angular contact ball bearings, double row tapered roller bearings, axial tapered roller bearings or axial spherical roller bearings. If tapered roller bearings with two or four rows are used as radial bearings, an additional axial bearing is not normally necessary.

Spherical roller bearings are common as roll bearings where high axial guidance accuracy is not required and speeds are low.

Sealed multi-row tapered roller bearings for work rolls reduce the grease consumption and thus the environmental impact, *Figure 10*.

Axial tapered roller bearings for screw-down mechanisms ensure low screw-down forces due to their low friction.



Figure 10
Sealed
four-row tapered roller bearing
for work rolls

Single row cylindrical roller bearings as well as single and double row angular contact ball bearings are found predominantly in high speed rolling stands on wire and light section production lines.

The drive shafts in heavy duty rolling mills have a considerable mass. They were previously normally supported in plain bearings. Now, wear and lubricant requirements are considerably reduced due to the use of special cylindrical roller bearings of split design.

Spherical roller bearings are frequently used in gearboxes for rolling mills. In newer designs, the shafts are supported in double row cylindrical roller bearings as non-locating bearings and in double row tapered roller bearings as locating bearings. This bearing arrangement gives particularly accurate radial and axial guidance of the shafts.

Split cylindrical roller bearings are frequently used in the crankshafts of cold pilger machines.

For the bearing arrangement of work rolls in cold pilger machines, spherical roller bearings with a tapered bore and a special internal construction are used that are matched to the particular load conditions in these machines.

The roll bearing arrangement of cluster type cold rolling mills must ensure high surface quality and uniform thickness of the rolled strips. Multi-row cylindrical roller bearings or tapered roller bearings of various designs fulfil these requirements as back-up rollers.

Special publications

TPI 148	Rolling Bearing Arrangements for Converters
TPI 157	Split Cylindrical Roller Bearings for the Bearing Arrangements of Rolling Mill Drive Shafts
WL 17114	Sealed FAG Spherical Roller Bearings
WL 17115	Bearings and Service – Productivity and Reliability for Metal Production
WL 17200	FAG Rolling Bearings in Rolling Mills
WL 41140	FAG Rolling Bearings for Rolling Mills
WL 80154	Four-row Tapered Roller Bearings, Mounting Instructions
Publication PLS	The Bearing Solution for Strand Guide Rollers.



Bearing arrangements for the paper industry

Modern large paper machines contain a large number of rolling bearings of various types and sizes. Very high operational reliability is demanded of all bearings in order to prevent expensive downtime. In many cases, monitoring is carried out using the FAG Diagnostic Service, *Figure 11*.

Attention must also be paid to ensuring ease of mounting. There are also special requirements depending on the type of paper machinery and the subassemblies involved. In the wet section, the emphasis is on preventing ingress of water, while the bearings in the dry section must also be designed for high temperatures.

For suction box rolls in the wet section, spherical roller bearings with a conical or cylindrical bore and increased running accuracy are normally used.

Spherical roller bearings with lubrication holes in the inner ring are used if the outer ring rotates.

For very high speeds, spherical roller bearings with increased running accuracy and increased internal clearance are installed.



Figure 11
Condition-based rolling bearing monitoring using FAG VibroCheck

An angular adjustment facility and high load carrying capacity are required in central press rolls, so spherical roller bearings are used, *Figure 12*.

Sophisticated labyrinth seals are required in the wet section in order to avoid ingress of water spray. In deflection compensating rolls, the roll sleeve rotates about the stationary roll axis. The roll sleeve is guided by spherical roller bearings, which may have special features including increased running accuracy, increased internal clearance and lubrication holes in the inner ring.
For directly driven rolls, triple ring bearings are sometimes used. The axis is supported in the bearing inner ring.
The rotating intermediate ring connects the drive to the roll sleeve.



Figure 12
Spherical roller bearings E1 of X-life quality. With superior load carrying capacity, reduced operating temperature and very long operating life

The operating conditions in the dry section are characterised by high temperature and thermal expansion of the dryer roll. Spherical roller bearings are normally used as locating bearings. Up to a working width of approx. 5 m, spherical roller bearings are also used as non-locating bearings; these can be displaced axially in the housing in response to changes in the length of the dryer roll. For larger working widths, preference is given to self-aligning double row cylindrical roller bearings in normal plummer block housings, *Figure 13*, page 1112. The spherical roller bearings have an increased internal clearance C4 and the cylindrical roller bearings have an internal clearance to C5.

For guide rollers in the dry section too, significant changes in length due to high ambient temperatures must be taken into consideration. The bearings are connected to the oil loop of the dryer rolls.

Calender rolls in the end section are normally fitted with spherical roller bearings. Due to the high temperature, they have increased internal clearance and in some cases a conical bore.
Heat is dissipated by means of high oil flow quantities.
In large, high speed machines, the bearing inner rings with a conical bore are mounted directly on the tapered roll journals in order to achieve smooth running. The spherical roller bearings normally used have the radial internal clearance C3 or C4.

In spreader rolls running at high speeds, the use of hybrid deep groove ball bearings with steel rings and ceramic balls has proved effective. Since these bearings have only half the usual number of balls, the risk of slippage is reduced.



Figure 13
Self-aligning double row cylindrical roller bearing

Special publications

WL 13103	Rolling Bearing Arrangements for the Paper Industry
Publication PPL	Optimum Paper Production
TPI 147	Self-Aligning FAG Cylindrical Roller Bearings: The Ideal Non-Locating Bearing Concept
TPI 169	FAG Triple Ring Bearings for the Paper Industry in Deflection Compensating Rolls
TPI 173	Relevant Suffixes for Spherical Roller Bearings in the Paper Industry
TPI WL 13-4	Hybrid Deep Groove Ball Bearings for Spreader Rolls.

Bearing arrangements in deep and surface mining

The machines used in deep and surface mining perform extremely arduous work.

The high load carrying capacity of the drill head bearing arrangement in tunnel-driving machines is ensured by cylindrical roller bearings and spherical roller bearings. The mass and tilting forces resulting from the offset drilling pressure are supported by single or double row radial cylindrical roller bearings or spherical roller bearings. The drilling pressure is supported by axial roller bearings.

In larger, compact machines, the drill head bearing arrangement is a ready-to-fit unit. It comprises either a double row tapered roller bearing or a triple ring axial/radial cylindrical roller bearing in which the crown gear can be integrated, *Figure 14*.
The bearing unit can withstand all load combinations of axial force, radial force and tilting moment.



Figure 14
Axial/radial cylindrical roller bearing with integrated crown gear

The forces acting on the drive pinions of tunnel-driving machines are securely supported by one spherical roller bearing and one cylindrical roller bearing.

In conveying and lifting equipment, the main requirement is for standardised rolling bearings of all types, sizes and variants. Some applications require large or split bearings.

The bucket wheel in bucket wheel excavators is supported by large spherical roller bearings (unsplit in the original equipment version, split in the aftermarket bearing version), *Figure 15*. These bearings support high loads and compensate, without constraining forces, the substantial misalignments that result from the large spacing between the locating and non-locating bearings.

Other demands placed on the bearing arrangement include:

- handling large fluctuations in operating temperature
- long rating life
- sealing against slurry, moisture, contamination and sand
- simple maintenance as well as low time and cost outlay in mounting and dismounting.



Figure 15
Split spherical roller bearing

For gearbox bearing arrangements and for the bearing arrangement between the main gear and the hollow shaft flange, split cylindrical roller bearings are best suited due to the difficulty of access for bearing replacement.

One of many different drums in a belt installation is the drive drum. Spherical roller bearings allow compensation without constraining forces of the misalignments resulting from shaft deflections and deformation of the channels; these can fulfil the requirement for high operational reliabiity with low maintenance outlay. Specially developed housings are available for all bearing sizes.

The support rollers, connected either rigidly or in a jointed arrangement with each other, are normally fitted with deep groove ball bearings that are standardised, sealed and lubricated. Externally mounted seals prevent contamination entering the bearing arrangement.

Special publications

WL 21107	Heavy-Duty Rolling and Plain Bearings for Mining, Processing, On- and Offshore Technology
WL 43165	Split FAG Spherical Roller Bearings
WL 90118	Split FAG Plummer Block Housings of Series SNV.



Bearings for materials processing

Extreme operating and environmental conditions require robust bearing arrangements in crushers and mills, sieving and sorting machines as well as cylindrical rotary kilns, pelletising and sintering plants. Substantial shaft deflections and misalignments of the bearing positions must be compensated. High demands are made on the lubrication and sealing of the bearings.

Due to the high forces and harsh operation in crushers, spherical and cylindrical roller bearings are normally used.

In jaw crushers, also known as crosshead or double toggle crushers, spherical roller bearings support the crushing forces, the mass of the flywheels and the peripheral force of the drive via an eccentric shaft.

In gyratory or cone type crushers, the high radial forces are transmitted by two cylindrical roller bearings (outer bearings) and a spherical roller bearing (central bearing).
The axial masses are normally supported by an axial cylindrical roller bearing. Crusher cone and crusher shaft bearing arrangements with single and double row radial and axial cylindrical roller bearings or with large special tapered roller bearings are also in use.



Figure 16
Large spherical roller bearings for tube mills

For the rotating striking trains of single and twin shaft hammer crushers, spherical roller bearings are suitable due to the harsh operation and shaft deflection.

Large masses and shock type loads are characteristic of tube mills and also of hammer mills, impact crushers, rigid hammer crushers and impact wheel mills. Spherical roller bearings in specially developed housings are suitable for these requirements, *Figure 16*, page 1116. In roller grinding mills, the pressing, tilting and axial forces acting on the mill roller induce high radial and axial loads. These can be supported by a cylindrical roller bearing in combination with a spherical roller bearing or a tapered roller bearing unit in an X arrangement. In other roller grinding mills, each mill roller is supported by two tapered roller bearings mounted in an O arrangement.

Preferred bearing types for roller presses are spherical roller bearings and multi-row cylindrical roller bearings.

In order to support the particularly high shock type loads and radial accelerations of the exciter shaft in linear and free vibrators as well as eccentric screens, spherical roller bearings of series 223..-E1 and 223..-A of special designs are used, *Figure 17*.
These bearings are characterised by cages guided on the outer ring, restricted tolerances and increased radial internal clearance.

For special cases, spherical roller bearings of series 223..-E1A and 233..-A are also used.



Figure 17
Spherical roller bearings for oscillating stresses

The high combined loads at low speeds are supported in the radial support rollers of cylindrical rotary kilns by spherical roller bearings of series 241; they are located in split RLE or RLZ plummer block housings.
In axial support rollers, tapered roller bearings in an O arrangement have proven successful.

For the bearing arrangement of the pinion drive shaft, spherical roller bearings in specially developed plummer block housings of series RA are suitable.

The particular operating conditions in sintering and pelletising plan are best met by spherical roller bearings with a tapered bore on withdrawal sleeves. The bearings are mounted in split plummer block housings of series RA or SGB. Sealed double row cylindrical roller bearings can be considered for the bearing arrangements of pressure rollers, tapered roller bearings can be considered for the track wheels.

Special publications

TPI 197	FAG Special Spherical Roller Bearings for Vibratory Machinery
WL 21105	Rolling Bearings in Grinding Mills
WL 21106	Secure Handling of Severe Vibration, Special Spherical Roller Bearings in Vibrating Screens
WL 21107	Heavy-Duty Rolling and Plain Bearings for Mining, Processing, On- and Offshore Technology

Bearing arrangements in the air handling sector

Bearing arrangements for compressors, fans and centrifuges must fulfil high requirements in relation to functional reliability and cost-efficiency. In many cases standard bearings are suitable, in some cases special bearings are required.

In order to minimise gap losses in compressors, the rolling bearing arrangement must have narrow guidance clearance.
Some compressors run at very high speeds, so particular attention must be paid to the speed capacity of the bearings. Predominantly, four point contact bearings, cylindrical roller bearings and angular contact ball bearings are used.

For bearing arrangements in smaller fans, we offer special bearing units VRE3, *Figure 18*. Depending on the load conditions, six bearing arrangement variants are available.
The tubular form, unsplit plummer block housings are fitted with deep groove ball bearings, matched angular contact ball bearings and cylindrical roller bearings.



Figure 18
Plummer block housing unit VRE3 for fans

In large fans and blowers, bearings with proven success include spherical roller bearings or self-aligning ball bearings in plummer block housings SNV, LOE or LOU. Grease or oil lubrication is used according to the operating conditions.

Separators and decanters are centrifuges that can be used to separate solid materials from liquids or mixtures of liquids with simultaneous centrifuging of solids. Separation methods are used, for example, in the food and drinks industry, in chemical engineering and in environmental protection.
The design of the bearing arrangement must often take account of vibrations, external temperatures and special lubrication requirements. Selection of suitable bearings is made considerably easier by use of the calculation software BEARINX®.

In many cases, cost-effective standard bearings can be used such as angular contact ball bearings and cylindrical roller bearings with sheet steel cages. Through the use of BEARINX® for design work, it is possible to achieve a high level of functional reliability even taking account of extreme operating conditions.

Special publications	WL 22102	Bearing Technology for Compressors, Fans and Centrifuges.

Energy
Bearing arrangements in drilling and conveying plant

Drilling and conveying plant for oil and gas include various machines such as Crown Block, Crown Compensator, Top Drive and flushing pumps. These machines are fitted with a large number of standard and special bearings. These bearings must often withstand severe shocks and heavy mass forces. With its comprehensive product range, Schaeffler offers solutions matched to the application for both the onshore and offshore sectors.

For example, the rotary tables are fitted with large special axial angular contact ball bearings. They support the large mass of the drill string. In addition, adjacent parts such as spacer sleeves and flanges are integrated in some cases.

In flushing pumps (Triplex pumps), strongly alternating loads occur in the crank drive. In order to support these loads, large special cylindrical roller bearings are used for the big end and double row needle roller bearings or four-row cylindrical roller bearings in the crosstail.

The drill string is raised and lowered by means of pulley blocks with a large number of cable sheaves. The resulting load is transmitted by double row tapered roller bearings with adjusted axial internal clearance. Cable sheaves are also used in the so-called Crown Compensator application that compensates the tidal range (amplitude of the tides) for drilling vessels and wave movements in deep sea drilling.



Figure 19
Rolling bearings
for drilling and conveying plant

Bearing arrangements in power stations

Power stations are industrial plant for the provision of electrical and in some cases also thermal power.
These highly complex installations play an important role in the consumption of economic and ecological resources, which will increase in the coming decades.

Schaeffler Technologies is one of the leading suppliers of rolling and plain bearings, including those for applications in power stations. Under the brands FAG and INA, Schaeffler offers a large number of products and services for machinery in the energy generation sector. The standard bearings and customer-specific special bearings from Schaeffler have proved themselves under the most challenging application conditions, for example in typical bearing positions in coal-fired power stations such as impact wheel and bowl mills or air preheaters. Large masses and shock type loads are characteristic of impact wheel mills.
Spherical roller bearings are highly suitable for these requirements. In vertical mills, the pressing, tilting and axial forces acting on the mill roller induce high radial and axial loads.
These can be supported by a cylindrical roller bearing in combination with a spherical roller bearing or a tapered roller bearing unit in an X arrangement.

The air preheater recovers heat from the flue gas, transfers this to fresh air brought in through ventilators and thus achieves preheating of the combustion air.
A distinction is made here between horizontal and vertical air preheaters. Due to the large masses in conjunction with low speeds, the radial and axial spherical roller bearings used here normally run in the mixed friction range.

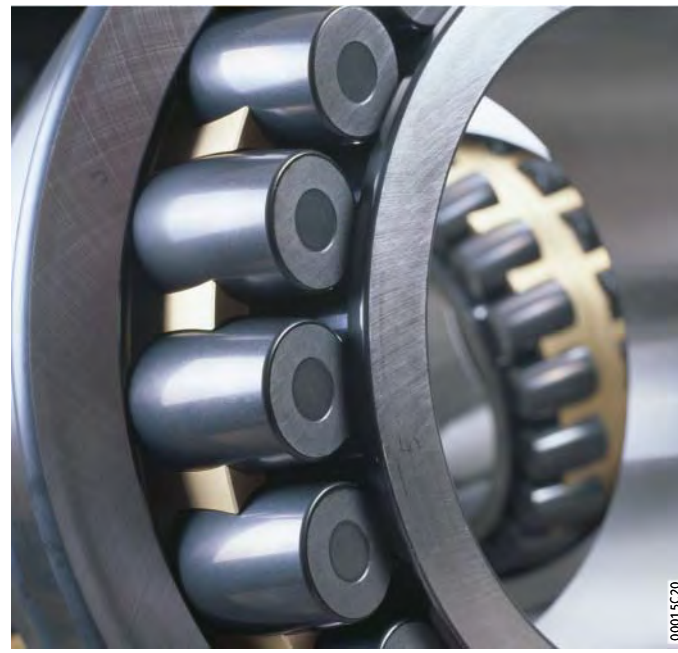

Figure 20
Spherical roller bearings for power stations

Market sectors

Consumer products

Rolling bearings are present almost everywhere in our environment: at home, at work and in leisure.
In most cases, however, the bearings are simply not noticed.

Bearings for consumer products

Rolling bearings in electrical devices are found in household appliances, in communications and entertainment equipment and in DIY tools as well as in sports equipment and medical technology.

In household appliances, the requirement is normally for operation with little noise and little vibration.
In order that the bearings achieve high cost-efficiency and reliability, there is a focus on long operating life and low maintenance requirements. For small devices, simple, sealed deep groove ball bearings lubricated for life are generally preferred in order to meet these requirements.

In order to avoid damage through passage of current, current-insulated bearings are available, *Figure 21*.
In such deep groove ball bearings, cylindrical roller bearings and tapered roller bearings of the design J20, an oxide ceramic coating is applied to the outside surface and end faces of the outer ring.

Alternatively, hybrid bearings with ceramic rolling elements can be used. Hybrid deep groove ball bearings (prefix HC) with silicon nitride balls are available by agreement.

In order to detect the speed and direction of rotation in electrical devices, deep groove ball bearings with an integral sensor are available.

INA/FAG rolling bearings have also proven themselves in modern sports equipment. In motorcycles, waterjets and bob skis, their speed capacity and quiet running are particularly significant.

Low bearing friction is important where the sportsman works using muscle power, for example in bicycles and inline skates.



Figure 21
Current-insulated rolling bearings

Special publications	TPI 206	Current-insulated Rolling Bearings Prevent Damage due to the Passage of Electrical Current
	TI WL 43-1206	FAG Deep Groove Ball Bearings with Integral Sensor
	TI WL 43-1210	FAG Hybrid Deep Groove Ball Bearings
	TPI 152	Flanged Housing Units for Large Electrical Machinery.



Addresses

Algeria

Schaeffler Technologies GmbH & Co. KG
Georg-Schäfer-Straße 30
97421 Schweinfurt
Germany
Tel. +(49) 9721 91-0
Fax +(49) 9721 91-3435
faginfo@schaeffler.com

Angola

Schaeffler Technologies GmbH & Co. KG
Georg-Schäfer-Straße 30
97421 Schweinfurt
Germany
Tel. +(49) 9721 91-0
Fax +(49) 9721 91-3435
faginfo@schaeffler.com

Antigua and Barbuda

FAG Interamericana
2655 Le Jeune Rd.
Gable International Plaza
Suite #319
Coral Gables, FL 33134
USA
Tel. +(1) 305 779 4807
Fax +(1) 305 779 4808
Alejandro.Troetsch@schaeffler.com

Argentina

Schaeffler Argentina S.r.l.
Av. Alvarez Jonte 1938
C1416EXR Buenos Aires
Tel. +(54) 11 / 40 16 15 00
Fax +(54) 11 / 45 82 33 20
info-ar@schaeffler.com

Armenia

Schaeffler Ukraine GbmH
Zhylyanskaya Str. 75, 5. Stock
Business Center «Eurasia»
01032 Kiew
Ukraine
Tel. +(380) 44 520 13 80
Fax +(380) 44 520 13 81
info.ua@schaeffler.com

Australia

Schaeffler Australia Pty Ltd
Level 1, Bldg 8, Forest Central
Business Park
49 Frenchs Forest Road
Frenchs Forst, NSW 2086
Tel. +(61) 2 8977 1000
Fax +(61) 2 9452 4242
sales.au@schaeffler.com

Schaeffler Australia Pty Limited
Suite 14, Level 3
74 Doncaster Road
North Balwyn, VIC 3104
Tel. +(61) 3 9859 8020
Fax +(61) 3 9859 8767
milos.grujic@schaeffler.com

Schaeffler Australia Pty Ltd
Unit 3, 47 Steel Place
Morningside, QLD 4170
Tel. +(61) 7 3399 9161
Fax +(61) 7 3399 9351
martin.grosvenor@schaeffler.com

Austria

Schaeffler Austria GmbH
Ferdinand-Pölzl-Straße 2
2560 Berndorf-St. Veit
Tel. +(43) 2672 202-0
Fax +(43) 2672 202-1003
info.at@schaeffler.com

Azerbaijan

Schaeffler Russland GmbH
Leningradsky Prospekt 47, Bau 3
Business-Center Avion
125167 Moscow
Russia
Tel. +(7) 495 7 37 76 60
Fax +(7) 495 7 37 76 61
info.ru@schaeffler.com

Bahamas

FAG Interamericana
2655 Le Jeune Rd.
Gable International Plaza
Suite #319
Coral Gables, FL 33134
USA
Tel. +(1) 305 779 4807
Fax +(1) 305 779 4808
Alejandro.Troetsch@schaeffler.com

Bahrain

Schaeffler Middle East FZE
Road SE101, Schaeffler Building
Jebel Ali Free Zone – Southside
Postbox 261808
Dubai UAE
United Arab Emirates
Tel. +(971) 4 81 44 500
Fax +(971) 4 81 44 601
info.ae@schaeffler.com

Bangladesh

Schaeffler Technologies GmbH & Co. KG
Georg-Schäfer-Straße 30
97421 Schweinfurt
Germany
Tel. +(49) 9721 91-0
Fax +(49) 9721 91-3435
faginfo@schaeffler.com

Barbados

FAG Interamericana
2655 Le Jeune Rd.
Gable International Plaza
Suite #319
Coral Gables, FL 33134
USA
Tel. +(1) 305 779 4807
Fax +(1) 305 779 4808
Alejandro.Troetsch@schaeffler.com

Belarus

Schaeffler Technologies GmbH & Co. KG
Repräsentanz Weißrussland
Odoewskogo 117, office 317
220015 Minsk
Tel. +(375) 17 269 94 81
Fax +(375) 17 269 94 82
info.by@schaeffler.com

Belgium

Schaeffler Belgium S.P.R.L./B.V.B.A.
Avenue du Commerce, 38
1420 Braine L'Alleud
Tel. +(32) 2 3 89 13 89
Fax +(32) 2 3 89 13 99
info.be@schaeffler.com

Belize

FAG Interamericana
2655 Le Jeune Rd.
Gable International Plaza
Suite #319
Coral Gables, FL 33134
USA
Tel. +(1) 305 779 4807
Fax +(1) 305 779 4808
Alejandro.Troetsch@schaeffler.com

Benin

Schaeffler Technologies GmbH & Co. KG
Georg-Schäfer-Straße 30
97421 Schweinfurt
Germany
Tel. +(49) 9721 91-0
Fax +(49) 9721 91-3435
faginfo@schaeffler.com

Bhutan

Schaeffler Technologies GmbH & Co. KG
Georg-Schäfer-Straße 30
97421 Schweinfurt
Germany
Tel. +(49) 9721 91-0
Fax +(49) 9721 91-3435
faginfo@schaeffler.com

Bolivia

Schaeffler Chile Ltda.
Jose Tomas Rider 1051
Providencia
7501037 Santiago
Chile
Tel. +(56) 2 477 5000
Fax +(56) 2 435 9079
sabine.heijboer@schaeffler.com

Bosnia-Herzegovina

Schaeffler Hrvatska d.o.o.
Ogrizovićeva 28b
10000 Zagreb
Croatia
Tel. +(385) 1 37 01 943
Fax +(385) 1 37 64 473
info.hr@schaeffler.com

Botswana

Schaeffler Technologies GmbH & Co. KG
Georg-Schäfer-Straße 30
97421 Schweinfurt
Germany
Tel. +(49) 9721 91-0
Fax +(49) 9721 91-3435
faginfo@schaeffler.com

Brazil

Schaeffler Brasil Ltda.
Av. Independência, 3500-A
Bairro Éden
18087-101 Sorocaba, SP
Tel. 0800 11 10 29
Fax +(55) 1533 35 19 60
sac.br@schaeffler.com

Bulgaria

Schaeffler Bulgaria OOD
Dondukov-Blvd. No 62
Eing. A, 6. Etage, App. 10
1504 Sofia
Tel. +(359) 2 946 3900
+(359) 2 943 4008
Fax +(359) 2 943 4134
info.bg@schaeffler.com

Burkina Faso

Schaeffler Technologies GmbH & Co. KG
Georg-Schäfer-Straße 30
97421 Schweinfurt
Germany
Tel. +(49) 9721 91-0
Fax +(49) 9721 91-3435
faginfo@schaeffler.com

Burundi

Schaeffler Technologies GmbH & Co. KG
Georg-Schäfer-Straße 30
97421 Schweinfurt
Germany
Tel. +(49) 9721 91-0
Fax +(49) 9721 91-3435
faginfo@schaeffler.com

Canada

Schaeffler Canada Inc.
100 Alexis Nihon, Suite 390
Montréal, QC H4M 2N8
Tel. +(1) 514-748-5111
800-361-5841 Toll Free
Fax +(1) 514-748-6111
info.ca@schaeffler.com

Schaeffler Canada Inc.
2871 Plymouth Drive
Oakville, ON L6H 5S5
Tel. +(1) 905-829-2750
800-263-4397 Toll Free
Fax +(1) 905-829-2563
info.ca@schaeffler.com

Schaeffler Canada Inc.
#106, 7611 Sparrow Drive
Leduc, AB T9E 0H3
Tel. +(1) 780-980-3016
800-663-9006 Toll Free
Fax +(1) 780-980-3037
info.ca@schaeffler.com

Central African Republic

Schaeffler Technologies GmbH & Co. KG
Georg-Schäfer-Straße 30
97421 Schweinfurt
Germany
Tel. +(49) 9721 91-0
Fax +(49) 9721 91-3435
faginfo@schaeffler.com

Chad

Schaeffler Technologies GmbH & Co. KG
Georg-Schäfer-Straße 30
97421 Schweinfurt
Germany
Tel. +(49) 9721 91-0
Fax +(49) 9721 91-3435
faginfo@schaeffler.com

Chile

Proveedora de Rodamientos
Eric Piecha Y Cia. Ltda.
Vergara 10-12
Santiago
Tel. +56 2 / 6 72 15 87
Fax +56 2 / 6 98 06 68
recom@piecha.cl

Schaeffler Chile Ltda.
Jose Tomas Rider 1051
Providencia
7501037 Santiago
Tel. +(56) 2 477 5000
Fax +(56) 2 435 9079
sabine.heijboer@schaeffler.com

China

Schaeffler Holding (China) Co., Ltd.
No. 1 Antuo Road
(west side of Anhong Road)
AnTing, JiaDing District
201804 Shanghai
Tel. +(86) 21 3957 6666
Fax +(86) 21 3957 6600
www.schaeffler.cn

Schaeffler Trading (Shanghai) Co., Ltd.
Industrial Service(F'IS)
No. 1 Antuo Road
AnTing, JiaDing District
201804 Shanghai
Tel. +(86) 21 3957 6500
Fax +(86) 21 3959 3205
www.fis-service.com

Schaeffler Hong Kong Co., Ltd.
Unit 3404-5 34/Floor,
Tower One Lippo Center
89 Queensway
Hong Kong
Tel. +(85) 2 2371 2680
Fax +(85) 2 2371 2680
sales_hk@cn.fag.com

Schaeffler Trading (Shanghai) Co., Ltd.
Taiyuan Office
Room 1209, 12th Floor,
Shanxi International Trade Center
West Tower
No 69 Fuxi Street
030002 Taiyuan, Shanxi
Tel. +(86) 351 8689260
Fax +(86) 351 8689261
info.cn-taiyuan@Schaeffler.com

Schaeffler Trading (Shanghai) Co., Ltd.
Shenyang Office
Unit H/I 14 Floor,
Huaxin International Tower
No. 219 Qingnian Avenue,
Shenhe District
110016 Shenyang, Liaoning
Tel. +(86) 24 23962633
Fax +(86) 24 23962533
info.cn-shenyang@Schaeffler.com

Schaeffler Trading (Shanghai) Co., Ltd.
Dalian Office
Unit 31F/05, Xiwang Tower
136 Zhongshan Road
116011 Dalian, Liaoning
Tel. +(86) 411 83681011
Fax +(86) 411 83681012
info.cn-dalian@Schaeffler.com

Schaeffler Trading (Shanghai) Co., Ltd.
Harbin Office
Unit G 21F, Always Development Plaza
No. 15 Hongjun Street, Nangang
150001 Harbin
Tel. +(86) 451 53009368
Fax +(86) 451 53009370
www.schaeffler.cn

Schaeffler Trading (Shanghai) Co., Ltd.
Nanjing Office
33-G,H, Nanjing IFC,
1 Hanzhong Road, Baixia District
210005 Nanjing, Jiangsu
Tel. +(86) 25 8312 3070
Fax +(86) 25 8312 3072
info.cn-nanjing@Schaeffler.com

Schaeffler Trading (Shanghai) Co., Ltd.
Jinan Office
Room 430, CITIC Plaza
No. 150 Luoyuan Avenue
250011 Ji'nan, Shandong
Tel. +(86) 531 8518 0435
Fax +(86) 531 8518 0438
info.cn-jinan@Schaeffler.com

Schaeffler Trading (Shanghai) Co., Ltd.
Hangzhou Office
Room 1507, Jiahua International
Business Center
No. 15, Hangda Road
310007 Hangzhou, Zhejiang
Tel. +(86) 571 8717 4820/21/22/30
Fax +(86) 571 8717 4833
info_cn-hangzhou@schaeffler.com

Schaeffler Trading (Shanghai) Co., Ltd.
Chongqing Office
9-2 Future International Building, No. 6
1st Branch
Jianxin North Road, Jiangbei District
400200 Chongqing
Tel. +(86) 23 67755574
Fax +(86) 23 67755524
info.cn-chongqing@Schaeffler.com

Schaeffler Trading (Shanghai) Co., Ltd.
Changsha Office
Room 1602, Yunda International Square
No. 478 Rurong Mid.Rd
410001 Changsha, Hunan
Tel. +(86) 731 85139138
Fax +(86) 731 85467042
info.cn-changsha@Schaeffler.com

Schaeffler Trading (Shanghai) Co., Ltd.
Wuhan Office
Room 3015, New World International
Trade Center
No. 568 Jianshe Avenue,
Jianghan District
430022 Wuhan, Hubei
Tel. +(86) 27 8526 7335
Fax +(86) 27 8526 7339
info.cn-wuhan@Schaeffler.com

Addresses

Schaeffler Trading (Shanghai) Co., Ltd.
Zhengzhou Office
Room 2007, 20F
No.226 Jinshui Rd.
Kineer International Mansion
450008 Zhengzhou, Henan
Tel. +(86) 371 86110766
Fax +(86) 371 86110799
info.cn-zhengzhou@schaeffler.com

Schaeffler Trading (Shanghai) Co., Ltd.
Guangzhou Office
Room 2906-2908,
Goldlion Digital Network Centre
No. 138 East Tiyu Road
510620 Guangzhou, Guangdong
Tel. +(86) 20 3878 1467
Fax +(86) 20 8761 0032
www.schaeffler.cn

Schaeffler Trading (Shanghai) Co., Ltd.
Chengdu Office
Room 2815, CCB Sichuan Building
No. 88 Tidu Street
610016 Chengdu, Sichuan
Tel. +(86) 28 8676 6718
Fax +(86) 28 8676 6728
info.cn-chengdu@Schaeffler.com

Schaeffler Trading (Shanghai) Co., Ltd.
Xi'an Office
Room 1202, HIBC
No. 33 Keji Road, Hi-tech Zone Xi'an City
710075 Xi'an, Shaanxi
Tel. +(86) 29 88337696 99
Fax +(86) 29 88337707
info.cn-xian@Schaeffler.com

Schaeffler (China) Co., Ltd.
18 Chaoyang Road, Taicang
Jiangsu Province
215400 Taicang, Jiangsu
Tel. +(86) 512 5395 7700
Fax +(86) 512 5357 4064
www.schaeffler.cn

Colombia

Schaeffler Colômbia Ltda.
Cra. 10 Nº 97A 13 Torre A
Ofic 209 Bogotá Trade Center
Bogotá
Tel. +(57) 1 621 53 00
Fax +(57) 1 621 03 22

Costa Rica

INA México, S.A. de C.V. -
Rodamientos FAG, S.A. de C.V.
Henry Ford #141
Col. Bondojito
Deleg. Gustavo A. Madero
07850 Mexico D.F.
Mexico
Tel. +(52) 55 5062 6085
Fax +(52) 55 5739 5850
distr.indl.mx@schaeffler.com

Croatia

Schaeffler Hrvatska d.o.o.
Ogrizovićeva 28b
10000 Zagreb
Tel. +(385) 1 37 01 943
Fax +(385) 1 37 64 473
info.hr@schaeffler.com

Cuba

INA México, S.A. de C.V.
Rodamientos FAG, S.A. de C.V.
Henry Ford #141
Col. Bondojito
Deleg. Gustavo A. Madero
07850 Mexico D.F.
Mexico
Tel. +(52) 55 5062 6085
Fax +(52) 55 5739 5850
distr.indl.mx@schaeffler.com

Czech Republic

Schaeffler CZ s.r.o.
Průběžná 74a
100 00 Praha 10
Tel. +(420) 267 298 111
Fax +(420) 267 298 110
info.cz@schaeffler.com

Denmark

Schaeffler Danmark ApS
Jens Baggesens Vej 90P
8200 Aarhus N
Tel. +(45) 70 15 44 44
Fax +(45) 70 15 22 02
info.dk@schaeffler.com

Djibouti

Schaeffler Technologies GmbH & Co. KG
Georg-Schäfer-Straße 30
97421 Schweinfurt
Germany
Tel. +(49) 9721 91-0
Fax +(49) 9721 91-3435
faginfo@schaeffler.com

Dominica

FAG Interamericana
2655 Le Jeune Rd.
Gable International Plaza
Suite #319
Coral Gables, FL 33134
USA
Tel. +(1) 305 779 4807
Fax +(1) 305 779 4808
Alejandro.Troetsch@schaeffler.com

Ecuador

Schaeffler Colômbia Ltda
Cra. 10 Nº 97A 13 Torre A
Ofic 209 Bogotá Trade Center
Bogotá
Colombia
Tel. +(57) 1 / 621 53 00
Fax +(57) 1 / 621 03 22

REPRESENTACIONES ARCOS S.A.
Calle 93 Bis No. 19-40, Of. 403
Bogotá
Colombia
Tel. +57 1 / 6 18 51 31
Fax +57 1 / 6 35 96 73
arcoscol@latino.net.co

Egypt

Delegation Office
Schaeffler Technologies
25, El Obour Buildings – Floor 18 – Flat 4
Salah Salem St.
11371 Cairo
Tel. +(20) 2 24012432
Fax +(20) 2 22612637
schaeffleregypt@schaeffleregypt.com

El Salvador

INA México, S.A. de C.V. -
Rodamientos FAG, S.A. de C.V.
Henry Ford #141
Col. Bondojito
Deleg. Gustavo A. Madero
07850 Mexico D.F.
Mexico
Tel. +(52) 55 5062 6085
Fax +(52) 55 5739 5850
distr.indl.mx@schaeffler.com

Equatorial Guinea

Schaeffler Technologies GmbH & Co. KG
Georg-Schäfer-Straße 30
97421 Schweinfurt
Germany
Tel. +(49) 9721 91-0
Fax +(49) 9721 91-3435
faginfo@schaeffler.com

Eritrea

Schaeffler Technologies GmbH & Co. KG
Georg-Schäfer-Straße 30
97421 Schweinfurt
Germany
Tel. +(49) 9721 91-0
Fax +(49) 9721 91-3435
faginfo@schaeffler.com

Estonia

Schaeffler Technologies
Repräsentanz Baltikum
Duntes iela 23a
1005 Riga
Latvia
Tel. +(371) 67 06 37 95
Fax +(371) 67 06 37 96
info.lv@schaeffler.com

Ethiopia

Schaeffler Technologies GmbH & Co. KG
Georg-Schäfer-Straße 30
97421 Schweinfurt
Germany
Tel. +(49) 9721 91-0
Fax +(49) 9721 91-3435
faginfo@schaeffler.com

Fiji

Schaeffler New Zealand
(Unit R, Cain Commercial Centre)
20 Cain Road
1135 Penrose
New Zealand
Tel. +(64) 9 583 1280
+(64) 021 324 247
(Call out fee applies)
Fax +(64) 9 583 1288
sales.nz@schaeffler.com

Finland

Schaeffler Finland Oy
Lautamiehentie 3
02770 Espoo
Tel. +(358) 207 36 6204
Fax +(358) 207 36 6205
info.fi@schaeffler.com

France

Schaeffler France SAS
93, route de Bitche, BP 30186
67506 Haguenau
Tel. +(33) 3 88 63 40 40
Fax +(33) 3 88 63 40 41
info.fr@schaeffler.com

Gabon

Schaeffler Technologies GmbH & Co. KG
Georg-Schäfer-Straße 30
97421 Schweinfurt
Germany
Tel. +(49) 9721 91-0
Fax +(49) 9721 91-3435
faginfo@schaeffler.com

Gambia

Schaeffler Technologies GmbH & Co. KG
Georg-Schäfer-Straße 30
97421 Schweinfurt
Germany
Tel. +(49) 9721 91-0
Fax +(49) 9721 91-3435
faginfo@schaeffler.com

Georgia

Schaeffler Russland GmbH
Leningradsky Prospekt 47, Bau 3
Business-Center Avion
125167 Moscow
Russia
Tel. +(7) 495 7 37 76 60
Fax +(7) 495 7 37 76 61
info.ru@schaeffler.com

Germany

Schaeffler Technologies GmbH & Co. KG
Industriestraße 1 – 3
91074 Herzogenaurach
Tel. +(49) 9132 82-0
Fax +(49) 9132 82-4950
info.de@schaeffler.com

Schaeffler Technologies GmbH & Co. KG
Georg-Schäfer-Str. 30
97421 Schweinfurt
Tel. +(49) (9721) 91-0
Fax +(49) (9721) 91-3435
faginfo@schaeffler.com

Schaeffler Technologies GmbH & Co. KG
Geschäftsbereich Lineartechnik
Berliner Straße 134
66424 Homburg (Saar)
Germany
Tel. +(49) 6841 701-0
Fax +(49) 6841 701-2625
info.linear@schaeffler.com

INA - Drives & Mechatronics AG & Co. KG
Mittelbergstraße 2
98527 Suhl
Tel. +49 3681 7574-43

Ghana

Schaeffler Technologies GmbH & Co. KG
Georg-Schäfer-Straße 30
97421 Schweinfurt
Germany
Tel. +(49) 9721 91-0
Fax +(49) 9721 91-3435
faginfo@schaeffler.com

United Kingdom

Schaeffler (UK) Ltd
Forge Lane, Minworth
Sutton Coldfield B76 1AP
Tel. +(44) 121 3 13 58 70
Fax +(44) 121 3 13 00 80
info.uk@schaeffler.com

LuK (UK) Ltd.
Waleswood Road
Wales Bar
Sheffield S26 5PN
Tel. +(44) 19 09 51 05 00
Fax +(44) 19 09 51 51 51
www.luk.co.uk

Guatemala

INA México, S.A. de C.V. -
Rodamientos FAG, S.A. de C.V.
Henry Ford #141
Col. Bondojito
Deleg. Gustavo A. Madero
07850 Mexico D.F.
Mexico
Tel. +(52) 55 5062 6085
Fax +(52) 55 5739 5850
distr.indl.mx@schaeffler.com

Guinea

Schaeffler Technologies GmbH & Co. KG
Georg-Schäfer-Straße 30
97421 Schweinfurt
Germany
Tel. +(49) 9721 91-0
Fax +(49) 9721 91-3435
faginfo@schaeffler.com

Guinea-Bissau

Schaeffler Technologies GmbH & Co. KG
Georg-Schäfer-Straße 30
97421 Schweinfurt
Germany
Tel. +(49) 9721 91-0
Fax +(49) 9721 91-3435
faginfo@schaeffler.com

Haiti

FAG Interamericana
2655 Le Jeune Rd.
Gable International Plaza
Suite #319
Coral Gables, FL 33134
USA
Tel. +(1) 305 779 4807
Fax +(1) 305 779 4808
Alejandro.Troetsch@schaeffler.com

Honduras

INA México, S.A. de C.V. -
Rodamientos FAG, S.A. de C.V.
Henry Ford #141
Col. Bondojito
Deleg. Gustavo A. Madero
07850 Mexico D.F.
Mexico
Tel. +(52) 55 5062 6085
Fax +(52) 55 5739 5850
distr.indl.mx@schaeffler.com

Hungary

Schaeffler Magyarország Ipari Kft.
Rétköz u.5
1118 Budapest
Tel. +(36) 1 4 81 30 50
Fax +(36) 1 4 81 30 53
budapest@schaeffler.com

Iceland

Schaeffler Technologies GmbH & Co. KG
Georg-Schäfer-Str. 30
97421 Schweinfurt
Germany
Tel. +(49) (9721) 91-0
Fax +(49) (9721) 91-3435
faginfo@schaeffler.com

India

FAG Bearings India Limited
Lodhi Tower, Mall Road,
Ludhiana
Tel. +91 9779010791
info.fag.delhi@schaeffler.com

FAG Bearings India Limited
B-1504, Statesman House,
148, Barakhamba Road
New Dehli 110 001
Tel. +(91) 11 237382-77/-78
+(91) 11 415214-76/-77
Fax +(91) 11 515214-78
info.fag.delhi@schaeffler.com

INA Bearings India Pvt. Ltd.
Gahlot Farm House,
Opposite House No. 525
Sector-47, Haryana
Gurgaon 122001
Tel. +(91) 12 4416600
rajeev.kaushik@schaeffler.com

FAG Bearings India Limited
201, Kan Chamber, Civil Lines
Kanpur 208001
info.fag.delhi@schaeffler.com

FAG Bearings India Limited
203, Riddhi Siddhi Complex
Madhban
Udaipur 313 001
Tel. +(91) 29 4320 5482
truptesh.chokshi@schaeffler.com

FAG Bearings India Limited
Maneja
Vadodara 390 013
Tel. +(91) 26 52 6426-51
Fax +(91) 26 52 6388-04/-10
info.fag.in@schaeffler.com

Addresses

FAG Bearings India Limited
Nariman Bhavan, 8th Floor, 227,
Backbay Reclamation Nariman Point
Mumbai 400 021
Tel. +(91) 22 6681-4444
Fax +(91) 22 2202 7022
info.fag.mumbai@schaeffler.com

FAG Bearings India Limited
101 & 103 - Akshay Complex
Dhole Patil Road
Pune 411 011
Tel. +(91) 20 2612 2272
Fax +(91) 20 2612 2229
info.fag.pune@schaeffler.com

FAG Bearings India Limited
Flat No. 102, Sai Mitra Constructions,
Door No. 10-3-55/1, Street No. 4,
Lane 1 East Marredpally
Secunderabad 500 026
Tel. +(91) 40 42624150
Fax +(91) 40 40250256
info.fag.scd@schaeffler.com

FAG Bearings India Limited
18, Gr. Floor, Wst View
77, R.V. Road, Basavanagudi
Bangalore 560 004
Tel. +(91) 80 2657-5120
Fax +(91) 80 2657-4866
info.fag.bangalore@schaeffler.com

INA Bearings India Pvt. Ltd.
Site No. 1, Sri Nrusimha Towers,
First Floor,
Amruthnagar Main Road
Next to Sub-registrar's Office,
Konanakunte
Bangalore 560 062
Tel. +(91) 80 4260 6999
Fax +(91) 80 4260 6922
Sales.bangalore@schaeffler.com

FAG Bearings India Limited
710, 7th Floor, Phase II
Spencer Plaza
769 - Anna Salai
Chennai 600 002
Tel. +(91) 44 28 4935-82/-83/-84/-85
Fax +(91) 44 284975-77
info.fag.chennai@schaeffler.com

FAG Bearings India Limited
Flat No.10, 3rd Floor,
Krishnakamalam Pride Complex
391/392, Bharathiar Road
Coimbatore 641 004
Tel. +(91) 42 2252 8220
Fax +(91) 42 2421 0080
info.fag.cbe@schaeffler.com

FAG Bearings India Limited
Jasmine Towers, 5th Floor
Room No. 502B, 31,
Shakespeare Sarani
Kolkata 700 017
Tel. +(91) 33 22 8900-26/-27
+(91) 33 22 8332-27
Fax +(91) 33 22 89 00-97
info.fag.kolkata@schaeffler.com

INA Bearings India Pvt. Ltd.
369, Block 'K' 2nd Floor
New Alipore
Kolkata 700 053
Tel. +(91) 33 4060 8051
Fax +(91) 33 4060 8052
chanchal.khan@schaeffler.com

FAG Bearings India Limited
No. 308, 3rd Floor
Akashdeep Plaza, Golmuri
Jamshedpur 831 003
Tel. +(91) 65 7234 1186
info.fag.jmd@schaeffler.com

INA Bearings India Pvt. Ltd.
Plot No. A-3 Talegaon Industrial &
Floriculture Park
Village Ambi, Navalakha Umbre,
Taluka Maval
Pune 410 507
Tel. +(91) 20 3061 4100
Fax +(91) 20 3061 4308
info.in@schaeffler.com

Iran

Schaeffler Technologies GmbH & Co. KG
Georg-Schäfer-Str. 30
97421 Schweinfurt
Germany
Tel. +(49) (9721) 91-0
Fax +(49) (9721) 91-3435
faginfo@schaeffler.com

Iraq

Schaeffler Technologies GmbH & Co. KG
Georg-Schäfer-Straße 30
97421 Schweinfurt
Germany
Tel. +(49) 9721 91-0
Fax +(49) 9721 91-3435
faginfo@schaeffler.com

Israel

Schaeffler Technologies GmbH & Co. KG
Georg-Schäfer-Straße 30
97421 Schweinfurt
Germany
Tel. +(49) 9721 91-0
Fax +(49) 9721 91-3435
faginfo@schaeffler.com

Italy

Schaeffler Italia S.r.l.
Via Dr. Georg Schaeffler, 7
28015 Momo (Novara)
Tel. +(39) 3 21 92 92 11
Fax +(39) 3 21 92 93 00
info.it@schaeffler.com

Ivory Coast

Schaeffler Technologies GmbH & Co. KG
Georg-Schäfer-Straße 30
97421 Schweinfurt
Germany
Tel. +(49) 9721 91-0
Fax +(49) 9721 91-3435
faginfo@schaeffler.com

Japan

Schaeffler Japan Co., Ltd.
NewStage Yokohama. 1-1-32
Shinurashima-cho
221-0031 Yokohama
Tel. +(81) 45 274 8211
Fax +(81) 45 274 8221
info-japan@schaeffler.com

Korea

Schaeffler Korea Corporation
Seoul Office
14F, Kyobo life insurance Bldg.
#1,Jongno-gu
Seoul, 110-714
Tel. +(82) 2 311-3440
Fax +(82) 505-073-2042
sangnam.lee@schaeffler.com

Schaeffler Korea Corporation –
Guro Office
A-501, 1258, Guro-dong, Guro-gu,
Seoul, 152-721
Tel. +(82) 2 2625-8572
Fax +(82) 2 2611-6075

Schaeffler Korea Corporation –
Busan Office
577-7, Gwaebeop-dong,
Sasang-gu,
Busan, 617-809
Tel. +(82) 51 328-9386
Fax +(82) 51 324-0382

Schaeffler Korea Corporation –
Seobu Office
402, 3-ga Palbok-dong, Deokjin-gu,
Jeonju-si, Jeollabuk-do, 561-724
Tel. +(82) 63 211-5770
Fax +(82) 63 211-5791

Schaeffler Korea Corporation –
Daegu Office
Shindongyeong Bldg., 17-1
Bukseongno 1-ga Jung-gu,
Daegu, 100-864
Tel. +(82) 53 256-4068
Fax +(82) 53 253-5229

Latvia

Schaeffler Technologies
Repräsentanz Baltikum
Duntes iela 23a
1005 Riga
Tel. +(371) 7 06 37 95
Fax +(371) 7 06 37 96
info.lv@schaeffler.com

Lesotho

Schaeffler South Africa (Pty.) Ltd.
1 End Street Ext. Corner Heidelberg Road
2000 Johannesburg
South Africa
Tel. +(27) 11 225 3000
Fax +(27) 11 334 1755
info.co.za@schaeffler.com

Liberia

Schaeffler Technologies GmbH & Co. KG
Georg-Schäfer-Straße 30
97421 Schweinfurt
Germany
Tel. +(49) 9721 91-0
Fax +(49) 9721 91-3435
faginfo@schaeffler.com

Libya

Schaeffler Technologies GmbH & Co. KG
Georg-Schäfer-Straße 30
97421 Schweinfurt
Germany
Tel. +(49) 9721 91-0
Fax +(49) 9721 91-3435
faginfo@schaeffler.com

Lithuania

Schaeffler Technologies
Repräsentanz Baltikum
Duntes iela 23a
1005 Riga
Latvia
Tel. +(371) 7 06 37 95
Fax +(371) 7 06 37 96
info.lv@schaeffler.com

Luxembourg

Schaeffler Belgium S.P.R.L./B.V.B.A.
Avenue du Commerce, 38
1420 Braine L'Alleud
Belgium
Tel. +(32) 2 3 89 13 89
Fax +(32) 2 3 89 13 99
info.be@schaeffler.com

Macedonia

Schaeffler Technologies GmbH & Co. KG
Georg-Schäfer-Straße 30
97421 Schweinfurt
Germany
Tel. +(49) 9721 91-0
Fax +(49) 9721 91-3435
faginfo@schaeffler.com

Madagascar

Schaeffler Technologies GmbH & Co. KG
Georg-Schäfer-Straße 30
97421 Schweinfurt
Germany
Tel. +(49) 9721 91-0
Fax +(49) 9721 91-3435
faginfo@schaeffler.com

Malawi

Schaeffler Technologies GmbH & Co. KG
Georg-Schäfer-Str. 30
97421 Schweinfurt
Germany
Tel. +(49) 9721 91-0
Fax +(49) 21 / 91-3347
faginfo@schaeffler.com

Malaysia

Schaeffler Bearings (Malaysia) Sdn. Bhd.
5-2 Wisma Fiamma, No. 20 Jalan 7A/62A
Bandar Menjalara
52200 Kuala Lumpur
Tel. +(60) 3-6275 0620
Fax +(60) 3 6275 6421
marketing_my@schaeffler.com

Schaeffler Bearings (Malaysia) Sdn. Bhd.
(Penang Branch)
No. B-02-28, 2nd Floor, Krystal Point
303, Jalan Sultan Azlan Shah
11900 Sungai Nibong
Tel. +(60) 4 642 3708/3781
Fax +(60) 4 642 3724

Maldives

Schaeffler Technologies GmbH & Co. KG
Georg-Schäfer-Straße 30
97421 Schweinfurt
Germany
Tel. +(49) 9721 91-0
Fax +(49) 9721 91-3435
faginfo@schaeffler.com

Mali

Schaeffler Technologies GmbH & Co. KG
Georg-Schäfer-Straße 30
97421 Schweinfurt
Germany
Tel. +(49) 9721 91-0
Fax +(49) 9721 91-3435
faginfo@schaeffler.com

Malta

Schaeffler Technologies GmbH & Co. KG
Georg-Schäfer-Straße 30
97421 Schweinfurt
Germany
Tel. +(49) 97 21 / 91-35 27
Fax +(49) 9721 91-3435
faginfo@schaeffler.com

Marshall Islands

Schaeffler New Zealand
(Unit R, Cain Commercial Centre)
20 Cain Road
1135 Penrose
New Zealand
Tel. +(64) 9 583 1280
+(64) 021 324 247
(Call out fee applies)
Fax +(64) 9 583 1288
sales.nz@schaeffler.com

Mauritania

Schaeffler Technologies GmbH & Co. KG
Georg-Schäfer-Straße 30
97421 Schweinfurt
Germany
Tel. +(49) 9721 91-0
Fax +(49) 9721 91-3435
faginfo@schaeffler.com

Mauritius

Schaeffler Technologies GmbH & Co. KG
Georg-Schäfer-Str. 30
97421 Schweinfurt
Germany
Tel. +(49) 9721 91-0
Fax +(49) 9721 91-3435
faginfo@schaeffler.com

Mexico

INA México, S.A. de C.V. -
Rodamientos FAG, S.A. de C.V.
Henry Ford #141
Col. Bondojito
Deleg. Gustavo A. Madero
07850 Mexico D.F.
Tel. +(52) 55 5062 6085
Fax +(52) 55 5739 5850
distr.indl.mx@schaeffler.com

Micronesia

Schaeffler New Zealand
(Unit R, Cain Commercial Centre)
20 Cain Road
1135 Penrose
New Zealand
Tel. +(64) 9 583 1280
+(64) 021 324 247
(Call out fee applies)
Fax +(64) 9 583 1288
sales.nz@schaeffler.com

Moldavia

Schaeffler Ukraine GmbH
Zhylyanskaya Str. 75, 5. Stock,
Bussines Center «Eurasia»
01032 Kiew
Ukraine
Tel. +(380) 44-520 13 80
Fax +(380) 44-520 13 81
info.ua@schaeffler.com

Mongolia

Schaeffler Hong Kong Co., Ltd.
Unit 3404-5, 34/Floor,
Tower One, Lippo Centre
No 89 Queensway
Hong Kong
China
Tel. +(852) 2371 2680
Fax +(852) 2371 2680
sales_hk@cn.fag.com

Morocco

Schaeffler Technologies GmbH & Co. KG
Georg-Schäfer-Straße 30
97421 Schweinfurt
Germany
Tel. +(49) 9721 91-0
Fax +(49) 9721 91-3435
faginfo@schaeffler.com

Mozambique

Schaeffler Technologies GmbH & Co. KG
Georg-Schäfer-Str. 30
97421 Schweinfurt
Germany
Tel. +(49) 9721 91-0
Fax +(49) 9721 91-3435
faginfo@schaeffler.com

Namibia

Schaeffler Technologies GmbH & Co. KG
Georg-Schäfer-Str. 30
97421 Schweinfurt
Germany
Tel. +(49) 9721 91-0
Fax +(49) 9721 91-3435
faginfo@schaeffler.com

Nauru

Schaeffler New Zealand
(Unit R, Cain Commercial Centre)
20 Cain Road
1135 Penrose
New Zealand
Tel. +(64) 9 583 1280
+(64) 021 324 247
(Call out fee applies)
Fax +(64) 9 583 1288
sales.nz@schaeffler.com

Nepal

Schaeffler Technologies GmbH & Co. KG
Georg-Schäfer-Straße 30
97421 Schweinfurt
Germany
Tel. +(49) 9721 91-0
Fax +(49) 9721 91-3435
faginfo@schaeffler.com

Addresses

Netherlands

Schaeffler Nederland B.V.
Gildeweg 31
3771 NB Barneveld
Tel. +(31) 342 40 30 00
Fax +(31) 342 40 32 80
info.nl@schaeffler.com

New Zealand

Schaeffler New Zealand
(Unit R, Cain Commercial Centre)
20 Cain Road
1135 Penrose
Tel. +(64) 9 583 1280
+(64) 021 324 247
(Call out fee applies)
Fax +(64) 9 583 1288
sales.nz@schaeffler.com

Nicaragua

INA México, S.A. de C.V. -
Rodamientos FAG, S.A. de C.V.
Henry Ford #141
Col. Bondojito
Deleg. Gustavo A. Madero
07850 Mexico D.F.
Mexico
Tel. +(52) 55 5062 6085
Fax +(52) 55 5739 5850
distr.indl.mx@schaeffler.com

Niger

Schaeffler Technologies GmbH & Co. KG
Georg-Schäfer-Straße 30
97421 Schweinfurt
Germany
Tel. +(49) 9721 91-0
Fax +(49) 9721 91-3435
faginfo@schaeffler.com

Nigeria

Schaeffler Technologies GmbH & Co. KG
Georg-Schäfer-Straße 30
97421 Schweinfurt
Germany
Tel. +(49) 9721 91-0
Fax +(49) 9721 91-3435
faginfo@schaeffler.com

Norway

Schaeffler Norge AS
Grenseveien 107B
0663 Oslo
Tel. +(47) 23 24 93 30
Fax +(47) 23 24 93 31
info.no@schaeffler.com

Oman

Schaeffler Middle East FZE
Road SE101, Schaeffler Building
Jebel Ali Free Zone – Southside
Postbox 261808
Dubai UAE
United Arab Emirates
Tel. +(971) 4 81 44 500
Fax +(971) 4 81 44 601
info.ae@schaeffler.com

Pakistan

Pakistan Liaison Office of
Schaeffler Technologies GmbH & Co. KG.
B-11, KDA Sch # 1, Shahrah-e-Faisa
75350 Karachi
Tel. +92 21 3437 6041-2
Fax +92 21 3437 6043

Schaeffler Technologies GmbH & Co. KG
Georg-Schäfer-Straße 30
97421 Schweinfurt
Germany
Tel. +(49) 9721 91-0
Fax +(49) 9721 91-3435
faginfo@schaeffler.com

Palau

Schaeffler New Zealand
(Unit R, Cain Commercial Centre)
20 Cain Road
1135 Penrose
New Zealand
Tel. +(64) 9 583 1280
+(64) 021 324 247
(Call out fee applies)
Fax +(64) 9 583 1288
sales.nz@schaeffler.com

Panama

INA México, S.A. de C.V. -
Rodamientos FAG, S.A. de C.V.
Henry Ford #141
Col. Bondojito
Deleg. Gustavo A. Madero
07850 Mexico D.F.
Mexico
Tel. +(52) 55 5062 6085
Fax +(52) 55 5739 5850
distr.indl.mx@schaeffler.com

Papua-New Guinea

Schaeffler Australia Pty Ltd
Level 1, Bldg 8
Forest Central Business Park
49 Frenchs Forest Road
Frenchs Forest, NSW 2086
Australia
Tel. +(61) 2 89 77 10 00
Fax +(61) 2 94 52 42 42
sales.au@schaeffler.com

Paraguay

Schaeffler Brasil Ltda.
Av. Independência, 3500-A
Bairro Éden
18087-101 Sorocaba, SP
Brazil
Tel. +(55) 0800 11 10 29
Fax +(55) 15 33 35 19 60
sac.br@schaeffler.com

Peru

Schaeffler Chile Ltda.
Jose Tomas Rider 1051
Providencia
7501037 Santiago
Chile
Tel. +(56) 2 477 5000
Fax +(56) 2 435 9079
sabine.heijboer@schaeffler.com

Philippines

Schaeffler Philippines Inc
5th Floor, Optima Building
221 Salcedo Street, Legaspi Village
1229 Makati City
Tel. +(63) 2 759 3583
Fax +(63) 2 759 3578
marketing_ph@schaeffler.com

Schaeffler Philippines Inc –
Branch Office
Unit A- 202, S.A Bldg.
Plaridel St., Alang-Alang
Mandaue City
Tel. +(63) 32 236 2404
Fax +(63) 32 344 3644

Poland

Schaeffler Polska Sp. z o.o.
Budynek E
ul. Szyszkowa 35/37
02-285 Warszawa
Tel. +(48) 22 8 78 41 20
Fax +(48) 22 8 78 41 22
info.pl@schaeffler.com

Portugal

INA Rolamentos Lda.
Arrábida Lake Towers
Rua Daciano Baptista Marques Torre C,
181, 2º piso
4400-617 Vila Nova de Gaia
Tel. +(351) 22 5 32 08 00
Fax +(351) 22 5 32 08 60
info.pt@schaeffler.com

Romania

S.C. Schaeffler Romania S.R.L.
Aleea Schaeffler Nr. 3
507055 Cristian/Brasov
Tel. +(40) 268 505000
Fax +(40) 268 505848
info.ro@schaeffler.com

Russia

Schaeffler Russland GmbH
Leningradsky Prospekt 47, Bau 3
Business-Center Avion
125167 Moscow
Tel. +(7) 495 7 37 76 60
Fax +(7) 495 7 37 76 61
info.ru@schaeffler.com

Schaeffler Russland GmbH
Piskarevsky prospect, 2, build.3, letter A
Business-center “Benua”, office 207
195027 St. Petersburg
Tel. +(7) 812 633 3644
Fax +(7) 812 633 3645
info.spb@schaeffler.com

Schaeffler Russland GmbH
Ul. Gagarina 116, office 204
350000 Krasnodar
Tel. +(7) 861 219 53 18
Fax +(7) 861 219-53-18
lebeddit@schaeffler.com

Schaeffler Russland GmbH
ul. Clara Zetkin, 8, build 27/a, office 421,
BC “Admiraltejsky”
420030 Kazan
Tel. +7 843 511 46 12
Fax +7 843 511 46 12
gataursh@schaeffler.com

Schaeffler Russland GmbH
ul. Marshala Zhukova 35, Floor 4,
Office 5
445051 Togliatti
Tel. +(7) 8482 93 13 22
Fax +(7) 8482 93 13 29
info.volga@schaeffler.com

Schaeffler Russland GmbH
Oktyabr'skaya magistral, 2, office 808
630007 Novosibirsk
Tel. +(7) 383 328 01 53
Fax +(7) 383 328 01 54
nowosibirsk@schaeffler.com

Rwanda

Schaeffler Technologies GmbH & Co. KG
Georg-Schäfer-Straße 30
97421 Schweinfurt
Germany
Tel. +(49) 9721 91-0
Fax +(49) 9721 91-3435
faginfo@schaeffler.com

Samoa

Schaeffler New Zealand
(Unit R, Cain Commercial Centre)
20 Cain Road
1135 Penrose
New Zealand
Tel. +(64) 9 583 1280
+(64) 021 324 247
(Call out fee applies)
Fax +(64) 9 583 1288
sales.nz@schaeffler.com

São Tomé and Príncipe

Schaeffler Technologies GmbH & Co. KG
Georg-Schäfer-Straße 30
97421 Schweinfurt
Germany
Tel. +(49) 9721 91-0
Fax +(49) 9721 91-3435
faginfo@schaeffler.com

Saudi Arabia

Schaeffler Middle East FZE
Road SE101, Schaeffler Building
Jebel Ali Free Zone – Southside
Postfach 261808
Dubai UAE
United Arab Emirates
Tel. +(971) 4 81 44 500
Fax +(971) 4 81 44 601
info.ae@schaeffler.com

Senegal

Schaeffler Technologies GmbH & Co. KG
Georg-Schäfer-Straße 30
97421 Schweinfurt
Germany
Tel. +(49) 9721 91-0
Fax +(49) 9721 91-3435
faginfo@schaeffler.com

Serbia

Schaeffler Technologies
Repräsentanz Serbien
Branka Krsmanovica 12
11118 Beograd
Tel. +(381) 11 308 87 82
Fax +(381) 11 308 87 75
fagbgdyu@orion.rs

Seychelles

Schaeffler Technologies GmbH & Co. KG
Georg-Schäfer-Straße 30
97421 Schweinfurt
Germany
Tel. +(49) 9721 91-0
Fax +(49) 9721 91-3435
faginfo@schaeffler.com

Sierra Leone

Schaeffler Technologies GmbH & Co. KG
Georg-Schäfer-Straße 30
97421 Schweinfurt
Germany
Tel. +(49) 9721 91-0
Fax +(49) 9721 91-3435
faginfo@schaeffler.com

Singapore

Schaeffler (Singapore) Pte. Ltd.
151 Lorong Chuan, #06-01
New Tech Park, Lobby A
556741 Singapore
Tel. +(65) 6540 8600
Fax +(65) 6540 8668
info.sg@schaeffler.com

Slovak Republic

Schaeffler Slovensko, spol. s r.o.
Ulica Dr. G. Schaefflera 1
02401 Kysucké Nové Mesto
Tel. +(421) 41 4 20 59 11
Fax +(421) 41 4 20 59 18
info.sk@schaeffler.com

Schaeffler Slovensko, spol. s r.o.
Nevädzova 5
821 01 Bratislava
Tel. +(421) 2 43 294 260
Fax +(421) 2 48 287 820
info.sk@schaeffler.com

Slovenia

Schaeffler Slovenija d.o.o.
Glavni trg 17/b
2000 Maribor
Tel. +(386) 2 22 82 070
Fax +(386) 2 22 82 075
info@schaeffler.si

Solomon Islands

Schaeffler New Zealand
(Unit R, Cain Commercial Centre)
20 Cain Road
1135 Penrose
New Zealand
Tel. +(64) 9 583 1280
+(64) 021 324 247
(Call out fee applies)
Fax +(64) 9 583 1288
sales.nz@schaeffler.com

Somalia

Schaeffler Technologies GmbH & Co. KG
Georg-Schäfer-Straße 30
97421 Schweinfurt
Germany
Tel. +(49) 9721 91-0
Fax +(49) 9721 91-3435
faginfo@schaeffler.com

South Africa

Schaeffler South Africa (Pty.) Ltd.
1 End Street Ext. Corner Heidelberg Road
2000 Johannesburg
Tel. +(27) 11 225 3000
Fax +(27) 11 334 1755
info.co.za@schaeffler.com

Schaeffler South Africa (Pty.) Ltd.
58-64 Burman Road
Deal Party Estate
6012 Port Elizabeth
Tel. +(27) 41 407 5000
Fax +(27) 41 407 5109
info-za@schaeffler.com

Spain

Schaeffler Iberia, s.l.u.
C/ Foment, 2
Polígono Ind. Pont Reixat
08960 Sant Just Desvern – Barcelona
Tel. +(34) 93 4 80 34 10
Fax +(34) 93 3 72 92 50
info.es@schaeffler.com

Sri Lanka

Schaeffler Technologies GmbH & Co. KG
Georg-Schäfer-Straße 30
97421 Schweinfurt
Germany
Tel. +(49) 9721 91-0
Fax +(49) 9721 91-3435
faginfo@schaeffler.com

St. Kitts and Nevis

FAG Interamericana
2655 Le Jeune Rd.
Gable International Plaza
Suite #319
Coral Gables, FL 33134
USA
Tel. +(1) 305 779 4807
Fax +(1) 305 779 4808
Alejandro.Troetsch@schaeffler.com

St. Lucia

FAG Interamericana
2655 Le Jeune Rd.
Gable International Plaza
Suite #319
Coral Gables, FL 33134
USA
Tel. +(1) 305 779 4807
Fax +(1) 305 779 4808
Alejandro.Troetsch@schaeffler.com

Addresses

St. Vincent and the Grenadines

FAG Interamericana
2655 Le Jeune Rd.
Gable International Plaza
Suite #319
Coral Gables, FL 33134
USA
Tel. +(1) 305 779 4807
Fax +(1) 305 779 4808
Alejandro.Troetsch@schaeffler.com

Sudan

Schaeffler Technologies GmbH & Co. KG
Georg-Schäfer-Straße 30
97421 Schweinfurt
Germany
Tel. +(49) 9721 91-0
Fax +(49) 9721 91-3435
faginfo@schaeffler.com

Surinam

Schaeffler Brasil Ltda.
Av. Independência, 3500-A
Bairro Éden
18087-101 Sorocaba, SP
Brazil
Tel. 0800 11 10 29
Fax +(55) 15 33 35 19 60
sac.br@schaeffler.com

Swaziland

Schaeffler South Africa (Pty.) Ltd.
1 End Street Ext. Corner Heidelberg Road
2000 Johannesburg
South Africa
Tel. +(27) 11 225 3000
Fax +(27) 11 334 1755
info.co.za@schaeffler.com

Sweden

Schaeffler Sverige AB
Charles gata 10
195 61 Arlandastad
Tel. +(46) 8 59 51 09 00
Fax +(46) 8 59 51 09 60
info.se@schaeffler.com

Switzerland

Schaeffler Schweiz GmbH
Badstrasse 14
8590 Romanshorn
Tel. +(41) 71 4 66 66 66
Fax +(41) 71 4 66 63 33
info.ch@schaeffler.com

Syria

Schaeffler Technologies GmbH & Co. KG
Georg-Schäfer-Straße 30
97421 Schweinfurt
Germany
Tel. +(49) 9721 91-0
Fax +(49) 9721 91-3435
faginfo@schaeffler.com

Tadzhikistan

Schaeffler Russland GmbH
Leningradsky Prospekt 47, Bau 3
Business-Center Avion
125167 Moscow
Russia
Tel. +(7) 495 7 37 76 60
Fax +(7) 495 7 37 76 61
info.ru@schaeffler.com

Tanzania

Schaeffler Technologies GmbH & Co. KG
Georg-Schäfer-Straße 30
97421 Schweinfurt
Germany
Tel. +(49) 9721 91-0
Fax +(49) 9721 91-3435
faginfo@schaeffler.com

Thailand

Schaeffler (Thailand) Co., Ltd.
388 Exchange Tower, 34th Floor
Sukhumvit Road, Klongtoey
Bangkok, 10110
Tel. +(66) 2697 0000
Fax +(66) 2697 0001
info.th@schaeffler.com

Togo

Schaeffler Technologies GmbH & Co. KG
Georg-Schäfer-Straße 30
97421 Schweinfurt
Germany
Tel. +(49) 9721 91-0
Fax +(49) 9721 91-3435
faginfo@schaeffler.com

Tonga

Schaeffler New Zealand
(Unit R, Cain Commercial Centre)
20 Cain Road
1135 Penrose
New Zealand
Tel. +(64) 9 583 1280
+(64) 021 324 247
(Call out fee applies)
Fax +(64) 9 583 1288
sales.nz@schaeffler.com

Trinidad and Tobago

INA México, S.A. de C.V. -
Rodamientos FAG, S.A. de C.V.
Henry Ford #141
Col. Bondojito
Deleg. Gustavo A. Madero
07850 Mexico D.F.
Mexico
Tel. +(52) 55 5062 6085
Fax +(52) 55 5739 5850
distr.indl.mx@schaeffler.com

Turkey

Schaeffler Rulmanlari Ticaret Limited
Sirketi
Aydin Sokak Dagli Apt. 4/4
1. Levent
34340 Istanbul
Tel. +(90) 212 2 79 27 41
+(90) 212 280 77 98
Fax +(90) 212 281 66 45
+(90) 212 280 94 45
info.tr@schaeffler.com

Turkmenistan

Schaeffler Russland GmbH
Leningradsky Prospekt 47, Bau 3
Business-Center Avion
125167 Moscow
Russia
Tel. +(7) 495 7 37 76 60
Fax +(7) 495 7 37 76 61
info.ru@schaeffler.com

Tuvalu

Schaeffler New Zealand
(Unit R, Cain Commercial Centre)
20 Cain Road
1135 Penrose
New Zealand
Tel. +(64) 9 583 1280
+(64) 021 324 247
(Call out fee applies)
Fax +(64) 9 583 1288
sales.nz@schaeffler.com

Uganda

Schaeffler Technologies GmbH & Co. KG
Georg-Schäfer-Straße 30
97421 Schweinfurt
Germany
Tel. +(49) 9721 91-0
Fax +(49) 9721 91-3435
faginfo@schaeffler.com

UAE United Arab Emirates

Schaeffler Middle East FZE
Road SE101, Schaeffler Building
Jebel Ali Free Zone – Southside
Postfach 261808
Dubai UAE
Tel. +(971) 4 81 44 500
Fax +(971) 4 81 44 601
info.ae@schaeffler.com

Ukraine

Schaeffler Ukraine GmbH
Zhylyanskaya Str. 75, 5. Stock,
Businesscenter «Eurasia»
01032 Kiew
Tel. +(380) 44-520 13 80
Fax +(380) 44-520 13 81
info.ua@schaeffler.com

Uruguay

Schaeffler Argentina S.r.l.
Av. Alvarez Jonte 1938
C1416EXR Buenos Aires
Argentina
Tel. +(54) 11 40 16 15 00
Fax +(54) 11 45 82 33 20
info-ar@schaeffler.com

USA

Schaeffler Group USA Inc.
200 Park Avenue
P.O. Box 1933
Danbury, CT 06813-1933
Tel. +(1) 203 790 5474
Fax +(1) 203 830 8171
Walter.Newton@schaeffler.com

The Barden Corporation
200 Park Avenue
P.O. Box 2449
Danbury, CT 06813-2449
Tel. +(1) 203 744 2211
Fax +(1) 203 744 3756
sales@bardenbearings.com

Schaeffler Group USA Inc.
308 Springhill Farm Road
Corporate Offices
Fort Mill, SC 29715
Tel. +(1) 803 548 8500
Fax +(1) 803 548 8599
info.us@schaeffler.com

Schaeffler Group USA Inc.
5370 Wegman Drive
Valley City, OH 44280-9700
Tel. +(1) 800 274 5001
Fax +(1) 330 273 3522
luk-ina-fag-as.us@schaeffler.com

Uzbekistan

Schaeffler Russland GmbH
Leningradsky Prospekt 47, Bau 3
Business-Center Avion
125167 Moscow
Russia
Tel. +(7) 495 7 37 76 60
Fax +(7) 495 7 37 76 61
info.ru@schaeffler.com

Vanuatu

Schaeffler New Zealand
(Unit R, Cain Commercial Centre)
20 Cain Road
1135 Penrose
New Zealand
Tel. +(64) 9 583 1280
+(64) 021 324 247
(Call out fee applies)
Fax +(64) 9 583 1288
sales.nz@schaeffler.com

Venezuela

Schaeffler Venezuela C.A.
Urbanización San José de Tarbes
Torre BOD, Piso 14, Oficina 14-1
Valencia
Tel. +(58) 58 241 825 9250
Fax +(58) 58 241 825 9705
ana.acevedo@schaeffler.com

Vietnam

Schaeffler Vietnam Co., Ltd
6th Floor, TMS Building.
172 Hai Ba Trung Street, Da Kao Ward,
District 1.
Ho Chi Minh City
Tel. +(84) 8 22 20 2777
Fax +(84) 8 22 20 2776
marketing_vn@schaeffler.com

Schaeffler Vietnam Co., Ltd
Charm Vit Tower, 18th Floor
No. 117 Tran Duy Hung Street,
Cau Giay District
Ha Noi
Tel. +(84) 4 3556 0930
Fax +(84) 4 3556 0931
marketing_vn@schaeffler.com

Zambia

Schaeffler Technologies GmbH & Co. KG
Georg-Schäfer-Straße 30
97421 Schweinfurt
Germany
Tel. +(49) 9721 91-0
Fax +(49) 9721 91-3435
faginfo@schaeffler.com

Zimbabwe

Schaeffler Technologies GmbH & Co. KG
Georg-Schäfer-Straße 30
97421 Schweinfurt
Germany
Tel. +(49) 9721 91-0
Fax +(49) 9721 91-3435
faginfo@schaeffler.com



Schaeffler Technologies AG & Co. KG

Industriestraße 1 – 3
91074 Herzogenaurach
Germany
Internet www.ina.com
E-mail info.de@schaeffler.com

In Germany:
Phone 0180 5003872
Fax 0180 5003873

From other countries:
Phone +49 9132 82-0
Fax +49 9132 82-4950

Schaeffler Technologies AG & Co. KG

Georg-Schäfer-Straße 30
97421 Schweinfurt
Germany
Internet www.fag.com
E-mail faginfo@schaeffler.com

In Germany:
Phone 0180 5003872
Fax 0180 5003873

From other countries:
Phone +49 9721 91-0
Fax +49 9721 91-3435

MATNR 036831190-0000 / GL 1 / 03 / GB-D / 2016062 / Printed in Germany by stürtz